Topics Related with the Wind Turbine

JOSÉ DE JESÚS RUBIO-AVILA, ANDRÉS FERREYRA-RAMÍREZ, FERNANDO BARUCH SANTILLANES-POSADA
Departamento de electrónica, Area de Instrumentación
Universidad Autónoma Metropolitana, Unidad Azcapotzalco.
Av. San Pablo 180 Col. Reynosa Tamaulipas. Azcapotzalco, 02200 México D. F.
MÉXICO
jrubio@correo.azc.uam.mx, fra@correo.azc.uam.mx

MARTÍN SALAZAR-PEREYRA, GENARO DELOERA-FLORES
División de Mecatrónica e Industrial.
Tecnológico de Estudios Superiores de Ecatepec.
Av. Tecnológico Col. Valle Anáhuac C.P. 55210, Ecatepec de Morelos, Edo. De Méx.
MÉXICO
msalazar@tese.edu.mx

Abstract: - In this paper we present the modeling of a wing turbine, using the Euler Lagrange method and circuits theory. We get the mathematical equation (modeling) that describes the wind turbine and we simulate it using the mathlab program. We leave this result as a contribution and an opened line to continue the researching in the field of the renewable energies in our country.

Key-Words: Wind turbine, Modeling, Simulation.

1 Introduction

Some studies made confirm that in a leeward wind turbine, the appearance of oscillations of the torque in the turbine of the wind are associated to the own cut of the wind and to the shadow of the tower is denominated, it means, the part of back of the turbine [2]. These studies make simulations in mathlab. Other studies (Lucian Mihet-Stern and Frede Blaabjerg [1]) establish that the speed of the turbine would have to vary with the wind speed, that is why they propose alternative strategies of control to optimize the power produced by a wind turbine using simulation programs of control. They talked about at the rotational speed like variable to control, besides to use programs as mathlab or DIgSILENT, describing models to simulate the interaction between the wind turbine and the system of power [1].

The model tries to simulate the behavior of a wind turbine using induction generators and events of transitory faults in the network and during the normal operation, where it is the simplest used method and it is the one that connects a generator of induction to the network. This study uses two generators, one of 0.5 MW and another one of 2 MW.

As an important point, it mentions that the induction generators require of a magnetization power, mainly in the starting, which is cause of collapses in the network.

This study modeled all the components of the generation of electricity by means of the wind, that is, they used from the model of the wind speed, the aerodynamic model, the model of the transmission system, the model of the induction generator, the model of the starter to the control unit of the turbine, getting satisfactory results.

Dale S. L. Dolan [2] presents a formulation of torque aerodynamic generated in a turbine of 3 shovels including the effects of cut of the wind and the position of the tower. The model includes specific parameters of the turbine such as radio, height and dimensions of the tower, as well as specific parameters of place and the exponent of cut of the wind. The model provides the existence with pulsations due to the cut of the wind and explains so that sample cannot easily be identified in measures of field. In this model that the effect of the position of the tower, is more dominant than effect of cut of the wind determined by torque aerodynamic. Such model is adapted for a simulation in real time for a wind turbine.

Diverse studies also are made in the aerodynamics of the shovel. The specifications of the tests of homologation for the shovels are very strict; needing physical tests as much of the fatigue properties (fatigue test) as of the properties of resistance (static test). In many countries usually they have very rigorous requirements for the tests of homologation of rotor blades. One of the purposes of the tests in the rotor blades is the one to verify that the laminations in the shovel are safe, that is, the layers of the shovel will not separate. In the same way, the tests verify that the fibers will not be broken if the efforts are repeated.

In this paper we present the modeling of a wing turbine, using the Euler Lagrange method and circuits theory. It is clear that this type of studies is for the wind turbines of great scale, with shovels that go from the 30 meters in length, nevertheless, for our case of study, and taking into account the advantages from the clean energies, sets out in this work the construction of a prototype of a wind turbine. We make the first tests changing the wind speed in the prototype. On other hand, we get the mathematical equation (modeling) that describes the wind turbine and we simulate it using the mathlab program. Later, we try to reach that the prototype and the modeling are as similar as possible. We leave this result as a contribution and an opened line to continue the researching in the field of the renewable energies in our country.

2 Utility of renewable energy

The power crisis forces to a change in the form to organize the industrialized economies. Industrialization, from its origins, depended closely on the fossil combustible calls, mainly the coal and soon petroleum. Still today, approximately 90% of the world-wide supplying of energy has been based on these nonrenewable sources. But these resources are being exhausted: it is created, for example, that the petroleum reserves will begin to disappear in about fifty years. On the other hand, these power plants strongly are questioned by their responsibility in the call global heating and the deterioration of the atmosphere [8].

Nowadays, the denominated subject clean or renewable energies are receiving more and more importance within the subject of advantage of resources. The renewable energies have constituted an important part of the energy used by the humans from remote times, specially the wind energy and the hydraulics.

Navigation to candle, the water or wind mills and the constructive dispositions of the buildings to take advantage of the energy the sun, are good examples of renewable energies.

Towards the decade of years 1970 the renewable energies considered an alternative to the traditional energies, as much by their present and future availability guaranteed (unlike fossil fuels that need thousands years for their formation) as by its smaller environmental impact in the case of the clean energies. [7].

The use of systems able to generate energy of clean and sustainable form is having in recent years a great which had growth, largely, to the push received by the establishment of the problems derived from the climatic change and the exhaustion of the resources which our planet faces [8].

2.1 Clean and renewable energy

One of those systems able to generate energy clean, object of our study in this work, is the call wind energy, which is based on the use of the energy of the winds, which mainly constitutes an inexhaustible source and this given by the temperature differences and geographic factor of type.

The wind energy has many advantages that make it an attractive power station in great scale of small applications. From the environmental point of view, the wind energy with the help of their wind turbines contributes to use the air from the environment as a power supplying. In addition, the wind energy avoids the emission of polluting substances to the atmosphere, that is why, the greater advantage of the wind energy is that it preserves the ecological environment.

The energy of the wind does not produce any emission and it is not exhausted in a certain term. A single wind turbine of 1 mega-watt (1 MW) that works during a year can replace the emission of more than 1,500 tons of carbon dioxide, 6.5 tons of sulfide dioxide, 3.2 tons of oxides of nitrogen, and 60 mercury pounds [6].

When we spoke of alternative energies we referred to which unlike the conventional energies they use as generation source renewable resources and practically

has an inexhaustible source in relation to the life of the man in the planet, take place of continuous way and they are not exhausted, in addition they have its origin in the natural atmospheric environmental processes: the wind, the sun, the courses of the water, the decomposition of the organic matter, the movement of the waves in the oceans, the inner Earth heat is alternative power plants.

3 Generation of energy

In general terms, the generation of electrical energy consists of transforming some class of non-electrical energy, some examples are the chemistry, mechanics, thermal, etc, in electrical energy with the aid of the different types from thermoelectric, hydroelectric, electric-coal power stations, of combined cycle, dual, thermal power stations, nuclear power stations, of gas, of internal combustion, units of emergency and of course, the wind power stations [7].

3.1 Wind energy

The wind energy is the obtained energy of the wind force when interacting with the shovels of a wind turbine, that is, to say, it is the energy that is obtained by means of the wind or by means of the use of the kinetic energy generated by effect of the airflows. The wind energy has been taken advantage from the antiquity to move the boats impelled by candles or to make work the machinery of mills when moving its vanes. Is a type of green energy [8].

This type of energy is related to the movement of the air masses which they move of atmospheric regions of high pressure towards adjacent areas of low pressure.

4 Main power stations of generation in Mexico

In Mexico we have a great variety of power stations of electricity generation.
the power stations with more generation of electricity are the thermoelectric ones with a total generation of 44,8%, follow the hydroelectric power stations to him with an equal percentage the 22,17, other different producers with a 22.98%, also the electric-coal power stations power stations with a 5.22%, immediately the nuclear power stations with a 2.74%, almost in the end they are the thermal power stations are a 1.92%, and finally the wind power stations with a 0.171%.

In agreement with information from the Electricity Federal Commission (CFE), it is considered that the wind park La Venta II located in Oaxaca, will allow to a reduction 400 thousand tons annual of CO_2. This means that the annual production of the 84875 MW of this installation will replace 19784 tons equivalent of petroleum per year and with it the emission to the atmosphere of polluting agents will be avoided [5].

5 Wind turbines history

In 1802 the transformation of the wind energy in electrical energy was thought for the first time. Lord Kelvin tried to associate an electric generator to an air-motor, but it was necessary to wait for until 1850 the event of the Dynamo, so that it is known until now as “wind turbine”, in the electrical energy production.

The light of the Hebe was the first installation of marine marking of buoys equipped with an independent electrical power plant by means of a wind turbine.

The study in the fields of the aerodynamics allowed to reach great progresses in the air-motors, many of these even entailed to the accomplishment of great machines, whose power is included/understood between 100 and 1000 kW, which demonstrates already since then that the production of electrical energy from the wind is feasible.

From the diverse international experiences of operation of great sets of modern wind turbines, constituting wind power stations. The machines were changing from 1980 to 1995 from 50 kW to 500 kW, appearing in 1998 as units from 750 kW and 1000 kW, those were considered the top for this type of architecture and actual technologies of great wind turbines [7].

The results of the year of 1998 considered in this moment as the top, now are history, the advance obtained until now for this type of technology has been greater than hoped.

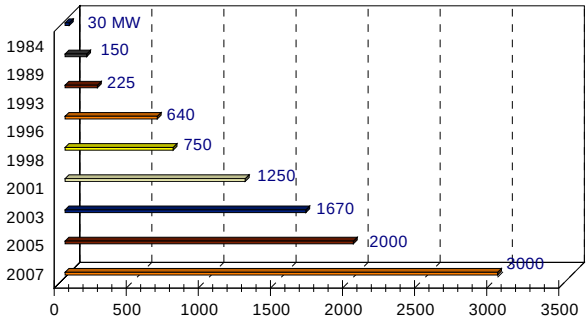

Figure 1.1 Power gotten from the wind turbines from 1984 to 2007 [5].

The These results allow to see that for the year of 1998 single one it was hoped to count on units of between 750 and 1000 kW, today have units that 3000 generate kW.

The technology around the composed materials, that now allow to slight, more resistant structures more thins and to the oxidation and the corrosion, and stronger simultaneously, as well as of super magnetos in the generators, they will in the future allow to develop new more reliable and economic concepts, from units of tens of watts until great power wind turbines, working in variable speed rating, taking advantage of better the energy the wind and along with constituting the hydroelectric energy, the main support of the electrical generation in the national systems.

6 Wind turbines

A wind turbine is an electric generator moved by the action of the wind the pick up of the wind energy takes place by means of the action of the wind on the shovels, in fact is the kinetic energy of the air in movement, that moves the helix and, through a mechanical system of gears, rotates the rotor of a generator, normally an three-phase, same alternator that turns the rotational mechanical energy electrical energy, this can be appreciated in 1.2 figure [1].

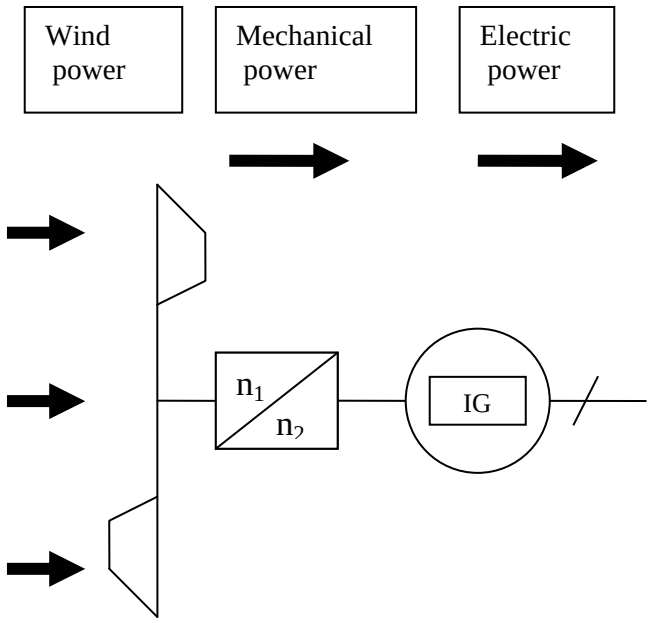

Figure 1.2 Block diagram of the wind turbine [1]

In fact, it is a system of energy converter , in this case is a system converter of wind energy that is made up of three main parts; (1) rotor, that turns the kinetic energy of the wind to a rotatory movement in the main arrow of the system (a mechanical power), (2) a transmission system, that connects this mechanical power of rotation in agreement with the type of application, the application for each case is different, that is, if the system is used for water pumping denominates wind bomb, if this application drives a mechanical device denominates wind motor, but it is an electric generator, denominated wind turbine [7].

The win turbines can work of way isolated or grouped in wind parks or wind generation plants, distanced of others, based on the environmental impact and of the turbulences generated by the movement of the shovels.

6.1 Wind turbine components

The wind turbine is constituted by the following mechanical and electrical parts:

6.2 Gondola

This component contains the key of the wind turbine, including the multiplier and the electric generator. I order to give the maintenance of this component the personnel can enter to the gondola from the tower of the turbine.

6.3 The rotor blades

These capture the wind and transmit its power towards the bushing in a modern wind turbine of 1500 kw. It has shovels that measure around 40 meters in length and its design is very similar to the one of the wing of an airplane.

6.4 The bushing

This component is connected to the axis of low speed of the wind turbine.

6.5 The axis of low speed

It connects bushing of the rotor to the multiplier in a modern wind turbine of 1500 kW for the rotor of very slow tour, to 20 to 35 RPM (r.p.m.). The axis contains conduits of the hydraulic system to allow the operation of the air brakes.

6.6 The multiplier also referred as gear box

It has to its left the axis of low speed. It allows that the axis of high speed that is to its right turns 50 times faster than the axis of low speed the axis of high speed turns approximately to 1500 rpm, so it allows the operation of the electric generator, it is equipped with a mechanical disk brake of emergency. The mechanical brake is used in case of failure of the air brake, or during the workings of maintenance of the turbine.

6.7 The electric generator

Usually is an asynchronous generator or of induction. In the wind turbines modern the maximum power usually is between 500 and 2000 kW.

6.8 The electronic controller

Is a computer that continuously sends the conditions of the wind turbine and that automatically controls the mechanism of direction before any failure case.

6.9 The refrigeration unit

It contains an electrical ventilator used to cool inside of the electric generator. In addition, it contains a cooling unit by used oil to cool the oil of the multiplier. Some turbines have generators cooled by water.

6.10 The tower

It supports the gondola and the rotor. It is generally an advantage in order to have a high tower. Since the wind speed increases as we moved away of the level of the ground 1,500 a modern turbine of kW will have a tower of about 60 meters. The towers can be or tubular towers or lattice window tower. The tubular towers are the more safe for the maintenance personal of the turbines since they can have and to use inner stairs to accede to the superior part of the turbine. The main advantage of the lattice window towers is that they are the more cheap the direction mechanism is activated by the electronic controller, who watches the wind direction using the vane.

7 Different configuration of wind turbines

The wind turbines are defined in general, according to the position of their axis of rotation, in relation to the wind direction Therefore they are divided in:

7.1 Horizontal axis wind turbines

At the present time, it is the spread machines more and with greater yields than the other existing ones, this is something very important at the moment for beginning a design. In this group include those that have 1, 2, and 3 shovels, denominated fast turbines. In addition, the typical multi-shovels are very used for the water pumping and it has between 12 and 24 shovels [6].

7.2 Vertical axis wind turbines

Within this classification, the most significant is the one of oscillating profile and the system of pick up with beating shovels. These systems have been studied widely but they present/display more disadvantages than advantages; in special they need

systems equal direction to those of parallel horizontal axis to the wind.

The recovery of energy is generally complicated and they do not have a good yield.

8 Windward wind turbines

The wind turbines of windward have the rotor or helix facing to the wind, it means, in front of the tower. The main advantage of this type of machines is that they avoid the influence of the aerodynamic shadow of the tower.

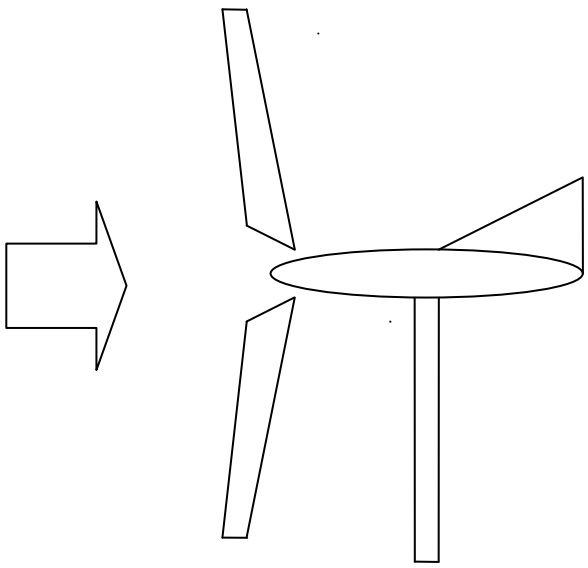

Figura 1.3 Windward turbine

This one is the configuration more used in the design and construction of wind turbines. Nevertheless, although to a lesser extent than in a configuration to leeward, there exists disturbance which is given due to the portion of the area of the rotor that faces the tower, also inducing a variation of the normal pattern of the variation of pressures throughout the lines of flow that cross this sector. That is why the flow line starts to curve itself before arriving at the tower, even if the surface were cylindrical or perfectly smooth. There is a fail whenever the rotor blades are near to the tower.

This type of sensible rotors requires a system for the direction of the rotor in order to maintain it facing the wind. Such systems can be active or passive. A system of active direction needs to use motorized sensors of direction and this system guides the rotor automatically towards the wind direction. A passive system of direction in this type of rotors is these that use a stabilizing fin.

9 Leeward wind turbines

Leeward system has like fundamental advantage, it does not require any direction device, as son as the rotor is designed suitably and nacelle in such a way that it causes that the system follows of passive form the wind direction.

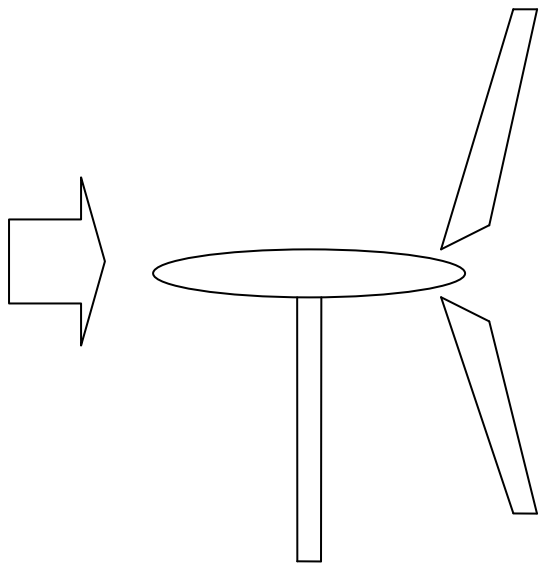

Figura 1.4 Leeward wind turbine.

An important additional advantage of this kind of turbine is the possibility of using material for the shovels, more flexible, as long as the permissible maximum arrow considers. Previously expressed is based: first, by the decreasing of the weight that implies a less rigid shovel; secondly, in this way they alleviate to the dynamic loads mainly the system due that at high speeds of wind, for example during bursts, shovels can curve themselves damaging to the tower and to all the structure.

The main disadvantage of this kind of turbine is the fluctuation of the power of the wind that produces the decreasing of the torque when the rotor is in back, that is, in the shadow of the tower. The term shadow of the tower is described by [2] Dale S. L. Dolan and Peter W. Lehn as the redirection of the wind due to the structure of the tower.

For turbines of three blades, the longest and most common disturbances of power or periodic pulsations happen in which is known as 3p frequency. This is, three times the frequency of the rotor or the same

frequency to which the blades pass through the tower, is object of study by many investigators [2].

10 Operation principle

Actually, the wind turbines are designed to work within certain wind speeds, so that a wind turbine starts up at a minimum value of the wind to overcome the frictions and to produce useful work, denominated speed of connection, or speed of down cut. The wind turbine would not to start up if the down cut is not reached. This is speed is included/understood between 3-5 m/s. From this point, the wind turbine will start to rotate turning from kinetic energy to mechanic energy, being of this form until it reaches the nominal power, generally the maxima that can be obtained.

Is in this point where it starts to act the control system by means of active or passive mechanisms of regulation in order to avoid that the machine works under conditions for which was not conceived.

Although it continues operating at greater speeds, the power that gives will not be different of the noun, and this will take place until it reaches the speed of cut or speed of superior cut, and it is determined by the capacity of an individual machine to support strong winds that could put in danger the installation. If this would happen, the control system rotates the blades of the turbine in the form that they present/display the minimum opposition to the wind, in general, this speed is considered from 25 m/s where, for security reasons, the wind turbine stops [5].

Theory exists denominated distribution of Weibull, where types graphics different from distribution of time and from frequency of wind speed in places specific, which it is of great importance to have a greater vision of the behavior of the wind in a specific place and to obtain results that take to us to improve the wind turbines design more and more [3].

11 Betz law

As a wind turbine slows down the wind when it passes through the rotor up to 2/3 of its initial speed, it means that all the kinetic energy does not take any advantage of what the wind contributes to the rotor, according to the Law of Betz we have that “Using an wind turbine, Only less than 16/27 of the kinetic energy of the wind can become in mechanics, it means, approximately 59%”. The Betz law was formulated for the first time by the German physicist Albert Betz in 1919 and in their book called “Wind-Energy”, published in 1926. Since this moment this law has provided good part of the knowledge that then was had on wind energy and wind turbine. This general affirmation can be applied to any wind turbine with a rotor in disc form [4].

12 Modeling of the wind turbine proposed

The modeling is to find the mathematical equations (model) that represent the turn from wind energy to mechanical energy, later the mathematical equation that represent the turn from mechanical energy to electrical energy as is given in Figure 1.2. We consider a windward wind turbine of three blades as is given if Figure 1.5. First we use the Euler-Lagrabian method [9] in order to get the model that represents the turn from mechanical energy to electrical energy. For this case we consider the Figure 1.5.

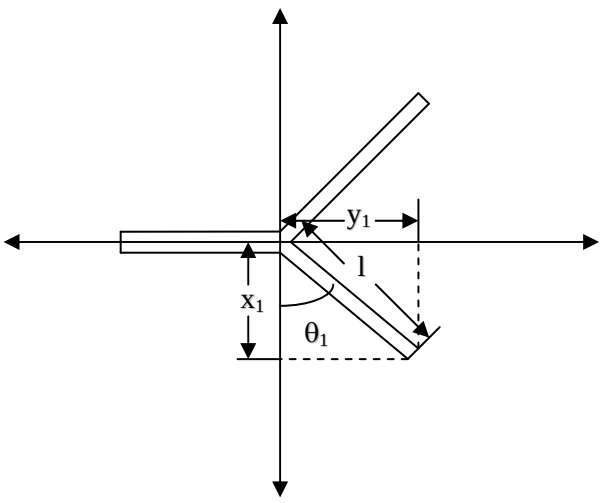

Figure 1.5: A windward wind turbine of three blades

From figure 1.5 it can be seen that:

$$x_1 = l\cos\theta_1,\ y_1 = l\sin\theta_1 \qquad (1)$$

Then the kinetic K_1 and potential V_1 energies are given as:

$$K_1 = \tfrac{1}{2} m l^2 \dot{\theta}_1^2,\ V_1 = -m\lg\cos\theta_1 \qquad (2)$$

Where g is the gravity acceleration. Then using the Euler Lagrange method [9] we have the following dynamic equation:

$$ml^2\ddot{\theta}_1 + m\lg\sin\theta_1 = \tau_1 \qquad (3)$$

Where τ_1 is the force which let to move the blade 1 of figure 1.5. For the blades 2 and 3 we have to consider:

$$\theta_2 = \theta_1 + 120^0, \theta_3 = \theta_1 + 240^0 \qquad (4)$$

So for blades 2 and 3 we have the following equations:

$$\begin{aligned} ml^2\ddot{\theta}_1 + m\lg\sin[\theta_1 + 120^0] = \tau_2 \\ ml^2\ddot{\theta}_1 + m\lg\sin[\theta_1 + 240^0] = \tau_3 \end{aligned} \qquad (5)$$

In order to get the model that represent the turn from wind to mechanical energy we have to consider that the addition of the three forces affect the motor, then:

$$\begin{aligned} m\lg\{\sin[\theta_1] + \sin[\theta_1 + 120^0] + \sin[\theta_1 + 240]\} + \\ 3ml^2\ddot{\theta}_1 = \tau_m \end{aligned} \qquad (6)$$

Now, let us to analyze the turn from mechanical to electrical energy. It can be seen in figure 1.6.

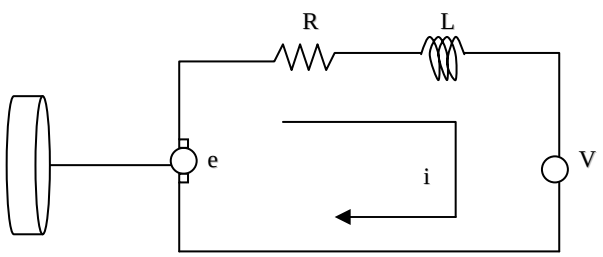

Figure 1.6: The turn from mechanical to electrical energy in the wind turbine

From the circuits theory [9], [10] and the figure 1.6 we can have a model represented as the addition of voltages as follows:

$$K\dot{\theta}_1 = Ri + L\dot{i} + V \qquad (7)$$

Where K is a mechanical constant of the generator, R is the resistance in the generator and L is the inductance in the generator. V is voltage generated. i is the current of the generator and it is the output of the system.

Thus equations (6) is the modeling that represents the turn form wind to mechanical energy and (7) is the modeling that represents the turn from mechanical to electrical energy and this equations represent the modeling of the wind turbine.

13 Simulation

We simulate the equations (6) and (7) with unitary elements, that is, the parameters are selected as V=L=R=K=m=l=1 and g=9.81. We consider the input τ_m as a step function as shows figure 1.7.

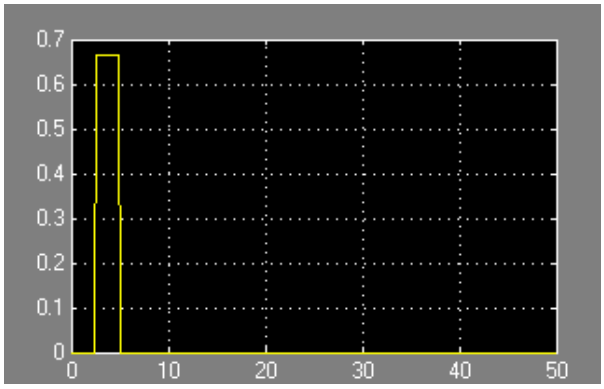

Figure 1.7: Input τ_m of the wind turbine

The angle parameter θ_1 is shown in figure 1.8. This figure shows that the parameter θ_1 grows each instant of time.

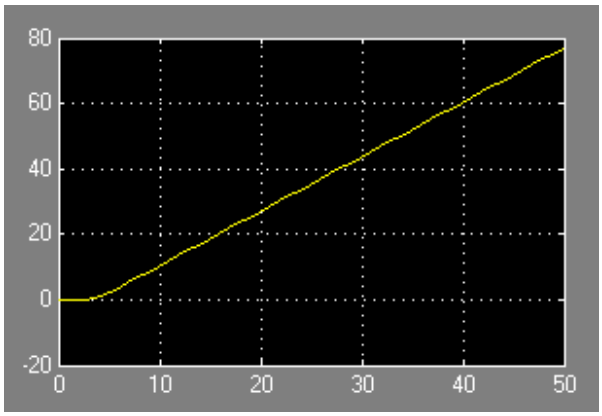

Figure 1.8: The parameter θ_1 of the wind turbine

The output i of the system is shown in figure 1.9.

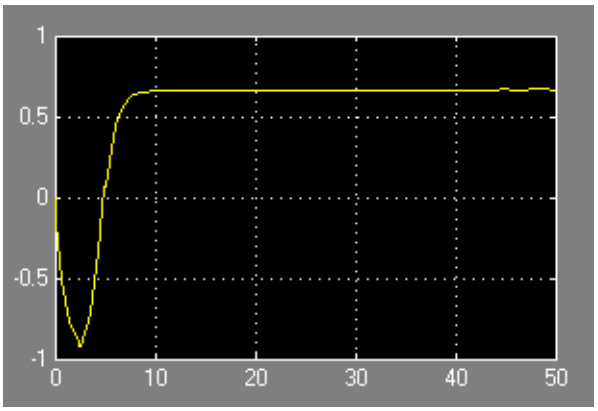

Figure 1.9: Output i of the system

14 Conclusion

In this paper we propose a new modeling for a wind turbine. It is represented as a equation that represents the turn from wind to mechanical energy and another one that represent the turn from mechanical to electrical energy. In the future, we will make a prototype of the wind turbine in order to validate the mathematical result.

References:

[1] Lucian Mihet-Popa, Frede Blaabjerg, "Wind Turbine Generator Modeling and Simulation Where Rotational Speed is the Controlled Variable" IEEE TRANSACTIONS ON INDUSTRY APPLICATIONS, VOL. 40, NO. 1, pp. 3-10, JANUARY/FEBRUARY 2004.

[2] Dale S. L. Dolan, *Student Member*, *IEEE*, and Peter W. Lehn, *Senior Member*, *IEEE* "Simulation Model of Wind Turbine 3p Torque Oscillations due to Wind Shear and Tower Shadow" IEEE TRANSACTIONS ON ENERGY CON VERSION, VOL. 21, NO. 3, pp. 717-724, SEPTEMBER 2006.

[3] Ing. Alejandro Parra Cuadras, Dr. Miguel Toledo Velásquez, "Evaluación del potencial eólico y su aplicación en sistemas de bombeo" Tesis para obtener el grado de Maestro en Ciencias de la Ingeniería Mecánica, opción energética.

[4] http://www.windpower.org/

[5]http://www.cfe.gob.mx/es/LaEmpresa/generacionelectricidad/

[6] MSc. Ernesto Fariñas Wong - farinas@uclv.edu.cu

[7]http://www.conae.gob.mx/wb/CONAE/CONA_612_energia_eolica

[8] http://www.soloenergia.com.ar

[9] M. Spong, S. Hutchison, M. Vidyasagar, Robot Modeling and Control, John Wiley & Sons, ISBN-13 978-0-471-64990-8, 2006.

[10] L. I. Gracia, C. Rérez, Modelado de Sistemas Dinámicos, Editorial Club Universitario, ISBN 84-8454-422-2, 2005.

José de Jesús Rubio Avila was born in México City in 1979. He graduated in electrical engineering from the ESIME IPN in México in 2001. He received the master degree in automatic control in the CINVESTAV IPN in México in 2004 and the doctor degree in automatic control in the CINVESTAV IPN in México in 2007. Since 2006, he is a full time professor in the Autonomous Metropolitan University - Mexico City where he is a member of the researching group of intelligent systems and signal processing. He has published 7 chapters in books, 8 international papers and he has presented 13 papers in International Conferences. He is a member of the adaptive fuzzy systems task force. His research interests are primarily focused on evolving intelligent systems, nonlinear and adaptive control systems, neural-fuzzy systems, mechatronic, robotic and delayed systems.

Andrés Ferreyra Ramírez was born in México City in 1968. He received the professional degree of Electrical Engineering with speciality in Electronics and Communications in 1994 from the Escuela Nacional de Estudios Profesionales campus Aragón UNAM, in México. He received the M. S. degree in biomedical engineering in 2001 from the Universidad Autónoma Metropolita, Iztapalapa, in México. He received the Ph.D. in Automatic Control in 2005 from CINVESTAV IPN, in México. He has been a Professor in Electronics Engineering Department of the Universidad Autónoma Metropolitana, Azcapotzalco, Mexico City, since 1996, where he is currently the Coordinator of the researching group of intelligent systems and signal processing. He has published 8 international papers and he has been presented 24 papers in Internationals Conferences and nationals. His research has focused on connectionist evolving systems, neuro-fuzzy system, fuzzy systems, fuzzy control and fuzzy classifiers.

Fernando Baruch Santillanes Posada was born in México City in 1983. He graduated in Manager of human resources from the Colegio de bachilleres plantel 5 – State of Mexico in 2001. Actually, he is studying the electronic engineering in the Autonomous Metropolitan University - Mexico City, (UAM) – State of Mexico (2001- 2008).

Martín Salazar Pereyra was born in México City in 1974. He graduated in energy engineering from the Autonomous Metropolitan University - Mexico City, (UAM) in 2001. He received the master degree in mechanical engineering in the ESIME IPN in México (2003. Since 2003, he is a full time professor in the Ecatepec Institute of Technologic – State of Mexico where he is a member of the researching group of mechatronics and energy systems. He has published and presented several papers in International Congress. His research interests are energy systems, desing and simulation of power plants, and others systems for producing power.

Genaro Deloera Flores was born in México City in 1971. He graduated in electromechanical engineering from the Chalco Institute of Technologic – State of Mexico in 2006. In same year, he was a professor in the same institute. Actually, he is studying the master degree in mechatronics engineering in the Ecatepec Institute of Technologic – State of Mexico (2006-2008).