On using PIC24F microcontroller to modify the pulse width of the signals which control electronic fuel injectors

GABRIEL VASIU and SEPTIMIU MISCHIE
Faculty of Electronics and Telecommunications
Politehnica University of Timisoara
Vasile Parvan 2, 300223 Timisoara
ROMANIA
gabriel.vasiu@etc.upt.ro, septimiu.mischie@etc.upt.ro http://www.etc.upt.ro

Abstract: - The paper presents the hardware and the software structure of an electronic module which is used inside of an automobile. The function of this module is to modify the pulse width for each of the four PWM signals which control the fuel injectors. This facility is used to increase the amount of injected fuel when the engine uses fuel mixtures. The most important element of this module is the PIC24FJ32GA002 microcontroller. Experimental results that prove the functionality of the designed module in the laboratory and inside the automobile are presented.

Key-Words: - PIC Microcontroller, Timer, Interrupts, automobile, engine, injector.

1 Introduction

The engine control unit (ECU) of an automobile generates four PWM (Pulse Width Modulator) signals to control the four electronic fuel injectors of the engine. During the pulse of the PWM signal, the voltage is applied to the injector's solenoid and the injector is opened to inject pressurized fuel into internal combustion engine. This time interval (called pulse width) is proportional to the amount of the fuel desired. When the engine uses fuel mixtures, for instance alcohol with gasoline, the pulse width should be modified (increased, especially) [1]-[3]. This increasing depends on the ratio between the amounts of alcohol and gasoline. ECU of an automobile can increase the pulse width by maximum 15% [4], but this is not enough. To allow a larger range, one possibility should be modifying the ECU software, but this is a difficult task. Therefore, a simpler solution is to design an electronic module. This module must be inserted between the outputs of the ECU and the inputs of the fuel injectors in such a way that the ECU is not damaged. The function of this module is to modify the pulse width of the four input signals by a gain factor. Thus, the four output signals are generated accordingly. There are modules which implement this function [5]. However these devices have some drawbacks: the increasing of the pulse width has a small range, 30-50% and this value can not be exactly known.

In this paper we present a new solution to modify the pulse width of the PWM signals, which is designed to work inside an automobile. The proposed module can modify the pulse width in the range 0.5-10, by means of a multi resolution potentiometer. This value is displayed on a three-digit display. The main component of our module is a PIC24FJ32GA002 microcontroller. The module was introduced inside the automobile and was tested and good results have been obtained.

The paper is organized as follows. In section 2, the hardware of the proposed module is presented. In section 3, the software structure is presented. Experimental results are presented in Section 4 while the conclusions are drawn in Section 5.

2 The hardware structure of the proposed module

The PWM signals which are generated by the ECU of an automobile have the following parameters: the period, between 75 ms and 10 ms (these values correspond to the engine speed: 800 revolutions/ minute and 6000 revolutions/minute) and the amplitude, about 12 V. The pulse width has values between 2 ms and 10 ms, but this value depends on the period of the PWM signal, such the duty cycle has values in the range 0.05 to 0.2. The duty cycle represents the ratio between the pulse width and the period. The ground reference of the PWM signals is different to the ground reference of the DC 12 V battery of the automobile. The solenoid of the injector has the following electrical parameters: a resistance of 16 Ω and an inductance of 14 mH.

The hardware structure of the proposed module was designed regarding the previously presented parameters and is presented in Fig. 1. It can be seen

ISBN: 978-1-61804-085-5

that the module has four inputs and four outputs. The four PWM signals from ECU are applied to the four inputs while the four outputs are applied to the four injectors. The module is powered by DC 12 V battery in the automobile.

Because all the four injectors are opened at the same time, it follows that the four input PWM signals are identically. Therefore, only one of them is used to further processing. Each of the other three is connected to the ground by one 18 Ω resistor, see Fig. 1. This value was chosen regarding the impedance of an injector. In this way, the ECU has the same load like prior to the introducing of this module. The function of the attenuator block, Fig. 2 is to reduce the amplitude of the PWM signal, where the low level is 0 V and the high level is 12 V, to the levels 0 V and 3.3 V which are accepted by the PIC microcontroller. This attenuator also contains an optocoupler, U4 in Fig. 2. In this way an electrical isolation between the high amplitude signal from the ECU and the PIC microcontroller is accomplished. However, the reference ground of the attenuator's output signal is fixed by the DC-DC converter from Power block, how will be presented in one of the following paragraphs. Furthermore, the attenuator inverts the PWM signal, that is, when the input is low, the output is high and reverse. Because the attenuator contains a 18 Ω resistor connected to the ground, the ECU has the same load on each of its four outputs.

The PIC24F microcontroller measures the time interval when the signal received from the attenuator is on the low level. For this purpose, the capture function of the Timer module is used. Then, using the output compare function of the same Timer, the PIC24F microcontroller generates a PWM signal whose width of the high level is equal with that previously measured, multiplied by a gain. This gain factor is proportional with the DC value established by the potentiometer in Gain Selection block and is presented on the Gain Display block, Fig. 1.

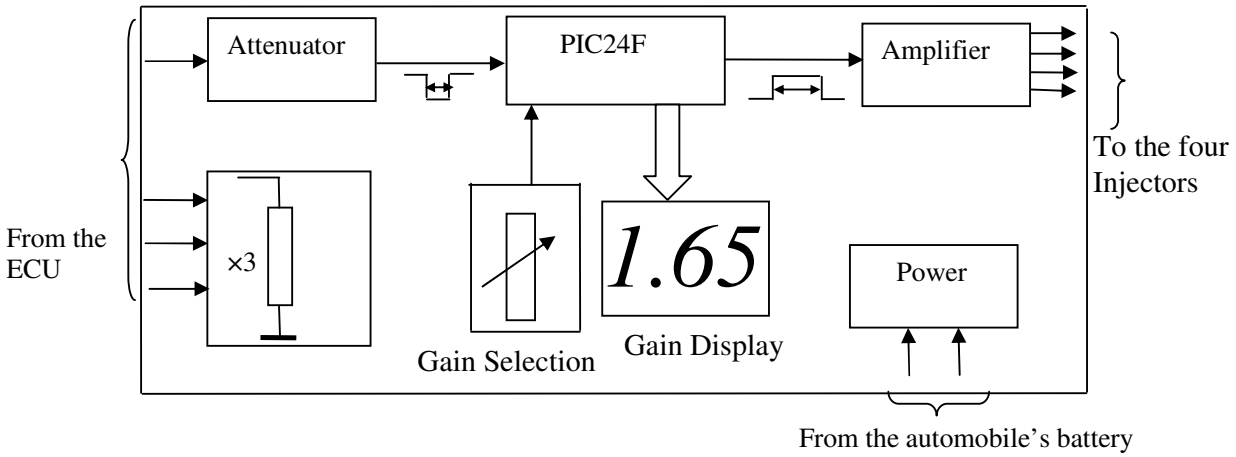

Fig. 1 The structure of the proposed module

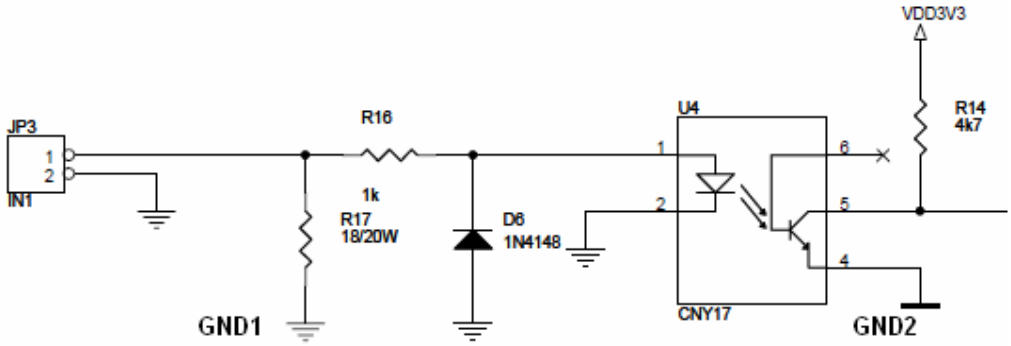

Fig.2 The structure of the attenuator

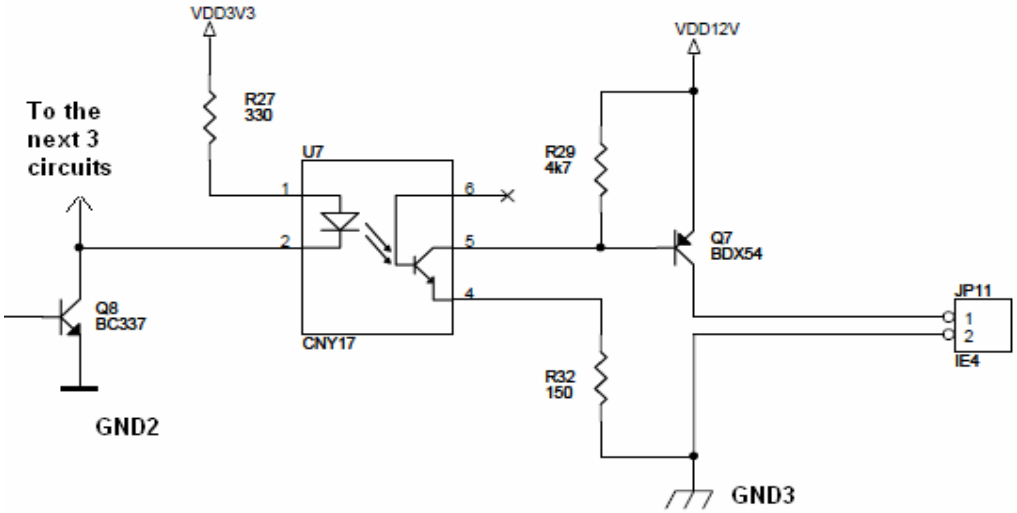

Fig.3 The structure of the amplifier

The PWM signal generated by the PIC microcontroller is then applied to the amplifier block, Fig. 3. This block contains the transistor Q8, which controls four circuits identically with that presented in Fig.3. In this way, four identically output PWM signals are generated. Each of these four circuits contains an optocoupler and a power transistor (U7 and Q7 in the first circuit, in Fig.3). In this way, an electrical isolation is accomplished and the levels of the signal are translated from 0 V and 3.3 V to 0 V and 12V. The function of the Q8 is to allow a sufficient current for the four LEDs of the optocouplers. The function of Q7 is to allow generating the current of about 1 A which is necessary to control the solenoid of the injector. Transistors Q8 and Q7 performs the inversion of their input signals such the output PWM signal has the same phase like the input of amplifier block and the output of ECU.

The Power block (Fig. 1) receives at its input the DC 12 V from the battery of the automobile. This block contains the following three circuits: a 5 V linear regulator, an isolated DC-DC converter (from 5V to 5V) and a 3.3 V linear regulator. The last voltage supplies the PIC24F microcontroller.

The designed electronic module has three ground signals. First one, denoted GND1, connects the ground of the four input signals with the second terminal of the four 18 Ω resistors. The second ground, denoted by GND2 is used for the PIC24F microcontroller and is obtained using the DC-DC converter of the Power block. The third one, GND3, which is the ground of the DC 12 V battery of the automobile, is used to allow generating the output PWM signals.

3 The software structure

The task of the software algorithm executed by the PIC24F microcontroller is to modify (increase or decrease) the pulse width of the PWM signal generated by Attenuator block by a gain factor between 0.5 and 10 which is chosen by the potentiometer. The new pulse must be generated by one of the output pins of the PIC microcontroller. The software also displays the gain factor on the 7 segment LED display. Two features of the PIC [6] are used to allow the increasing of the pulse width: input capture on rising (falling) edge and dual compare match mode with single output pulse.

The input capture interrupts are enabled all the time. Each time an input capture occurs, an interrupt request is generated, but only one type of input capture (either on the rising edge or on the falling edge) is enabled at a time.

Both input capture and output compare use the same time base, TMR2 [6]. The time interval when the input pulse is on the low level is measured using two values of TMR2: the first is captured on a falling edge of the input signal and the second is captured on the next rising edge. The Interrupt Service Routine (ISR) determines which capture is enabled at the time of its execution and enables the other type of edge for capture at its end.

In order to generate the output signal, the Output Compare Block has two registers, OC1R and OC1RS. When the content of TMR2 matches the OC1R, the output pin is driven high. When the content of TMR2 matches the OC1RS, the output pin is driven low.

Each time a capture on a falling edge occurred, a pulse whose width is equal with that of the previous

measured pulse, multiplied by the gain, is generated. Fig. 4 presents this idea, where N_1, N_2 N_3 and N_4 represent four successive captured values and W the pulse width. It can be seen that actually the rising edge of the output signal has a short delay in comparison with the input signal. This delay is equal with 5 periods of TMR2 and is necessary to allow the first instructions of the ISR to be executed (that part of the ISR which is executed when the interrupts on the falling edge are enabled). Thus, when the instruction OC1CON=0x0004, which enables generating the output signal is executed, the current content of the time base TMR2 have to be lower than the content of the OC1R register.

The DC value which imposes the gain is measured by ADC module of the PIC24F.

The basic structure of the main program and the ISR are presented in the following:

The Main Program
{Enable pin RP7 as channel 1Input Capture
Enable pin RP15 as channel 1 Output Compare
Enable Input Capture Interrupts
Enable Captures on the falling edge on channel 1
Initialize ADC module

Infinite Loop
{ADC_result=ADC1_Get_Sample(2); //the decimal 10-bit result of analog to digital conversion
gain=0.5+((float)ADC_result/100);
Display();}// Display the gain
} // The end of the infinite loop
} //The end of the Main Program

The structure of the ISR:
{
Clear the Input Capture Interrupt Flag
If Interrupt on the falling edge is enabled:
{Fall_edge=IC1BUF;
New_Pulse_width=Pulse_width×gain;
OC1R=Fall_edge+5;
OC1RS=OC1R+New_Pulse_width;
OC1CON=0x0004; //Enable to generate the output signal
IC1CON=0x83;//Enable Input Capture on Rising Edge
}
If interrupt on the rising edge is enabled:
{Ris_edge=IC1BUF;
Pulse_width=Ris_Edge– Fall_edge;
If Pulse_width<0, Pulse_width = Pulse_width + 65536; // Correction the result if an overflow has occured
IC1CON=0x82;//Enable Input Capture on Falling Edge
}
}

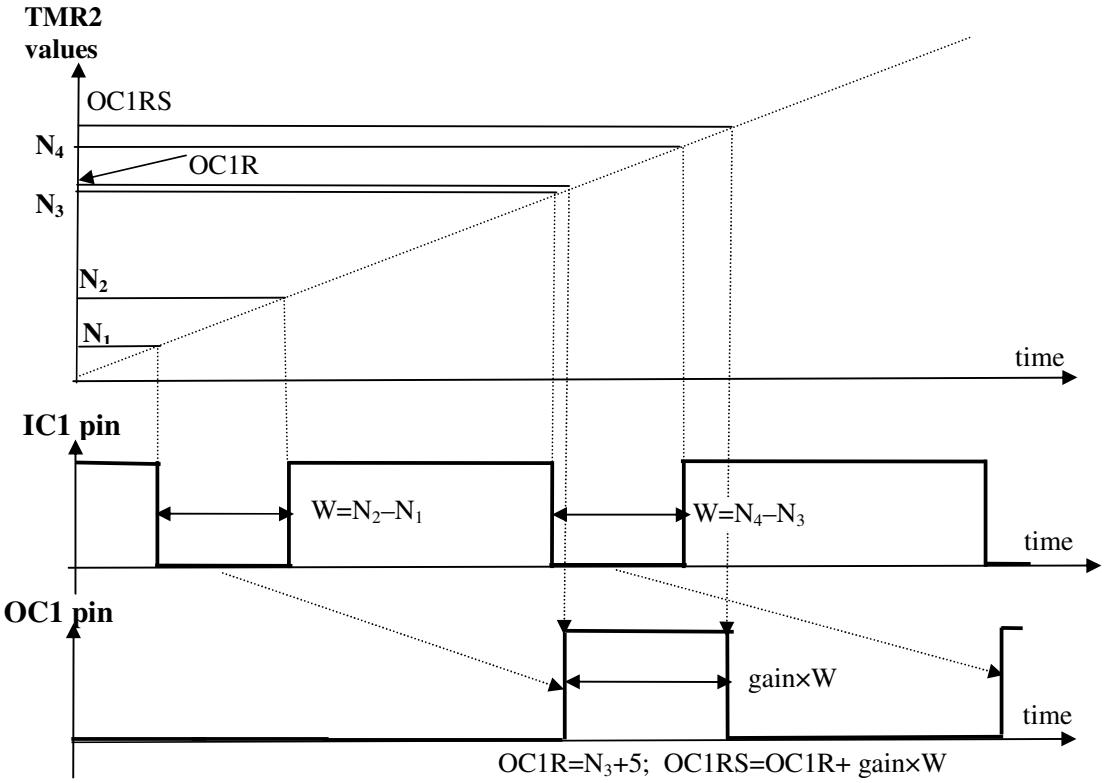

Fig.4 The principle of modifying the pulse width

4 Experimental Results

The following steps were performed to implement and test our module:

1. Simulation and validation of the hardware and software structures using the MikroC and Proteus environments.
2. Design the Printed Circuit Board (PCB) for the hardware structure using the Orcad environment.
3. Execute the PCB and soldering the components. The finished module is presented in Fig.5.
4. Download the executable code obtained using the MikroC environment into the Flash Memory of the PIC microcontroller by using the PIC Kit2 Emulation Programmer.

The obtained module was first tested in the laboratory. For this purpose a Hameg HM8131 Function Generator was used in "pulse" function to apply the input signal. Then, the four output signals were visualized using a Tektronix TDS210 Oscilloscope. These measurements were performed for different values of the factor. The input signal had the period in the range 10-75 ms and the duty cycle in the range 0.05-0.2. The results were as expected, that is the output signals had their pulse width multiplied by the gain factor.

The second test was performed inside the automobile. The module was connected as in the Fig. 1. That is, the cables which connect the four outputs of the ECU to the four injectors were disconnected and were connected to the inputs of our module. Then, the cables from the four outputs of our module were connected to the four injectors. Also the power of the module was connected to the DC 12 V battery of the automobile. The gain was adjusted to value 1. Then, the key of the automobile was connected. The first sign about the functionality of the module was the fact that the engine worked as before our module was connected. That is, the noise of the engine was the same. Then we visualized one of the four input signals and one of the four output signals for different values of the gain. Fig. 6 and 7 presents two captures of the oscilloscope screen. It can be seen a gain of about 1.3 in the width of the pulses. The negative peaks are caused by the inductive reactance of the injectors.

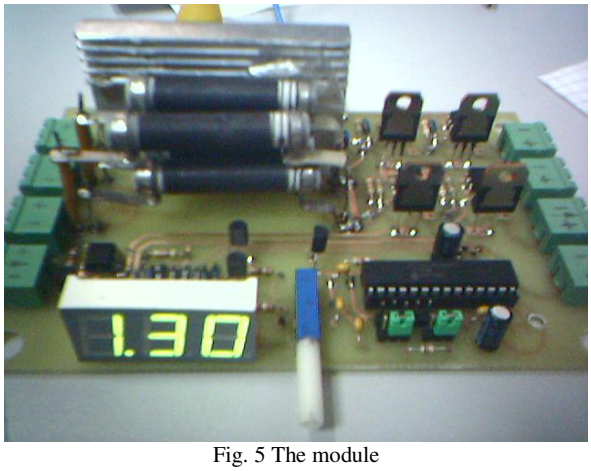

Fig. 5 The module

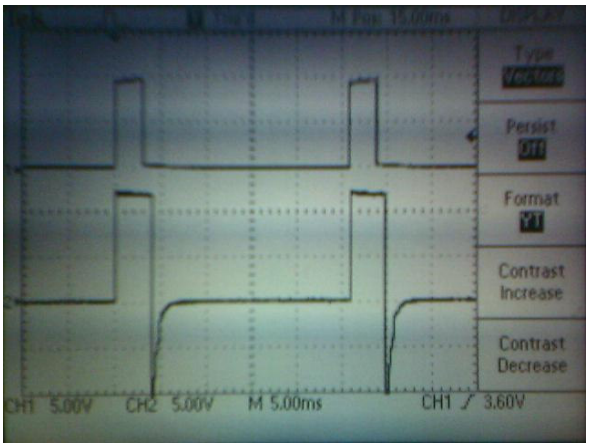

Fig. 6 The input and output signals

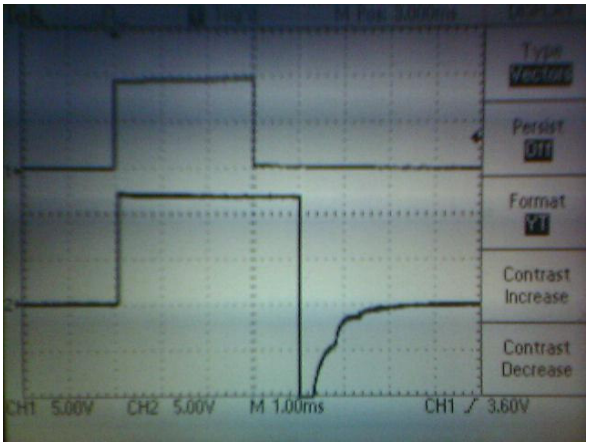

Fig. 7 A detail from the signals from Fig.4

5. Conclusions

This paper presents an electronic module which is used to enhance injection timings of the fuel system of an automobile. The gain which multiplies the pulse width can be adjusted by a potentiometer and is presented on a display. The module was tested inside the automobile and worked as expected. As a future work, the gain should be automatically established by a suitable algorithm depending on some parameters like the temperature of the engine or the amount of oxygen in the exhaust.

ISBN: 978-1-61804-085-5

References:

[1] O. Volpato, Termal Modeling of Heated Injectors, *SAE Techical Papers*, http://papers.sae.org/2011-36-0087, april 2011

[2] A. White, J. Choi, R. Nagamune, G. Zhu, Gain-scheduling control of port-fuel-injection processes, *Control Engineering Practice*, volume 19, no. 4, april 2011, pp 380-394.

[3] D. Snyder, G. Adi, M. Bunce, C. Satkoski and G. Shaver, Fuel blend fraction estimation for fuel-flexible combustion control: Uncertainty analysis, *Control Engineering Practice*, volume 18, no.4, April 2010, pp. 418-432.

[4] A. Irimescu, Fuel conversion efficiency of a port injection engine fuelled with gasoline-isobutanol blends, *Energy*, volume 36, No. 5, May 2011, pp. 3030-3035.

[5] http://www.alcoflex.com.br/alcoflex1/alcoflex_ingles/recomenda.htm

[6] *** PIC24FJ32GA004 Family Data Sheet, www.microchip.com

[7] R. Gaonkar, *The Fundamentals of Microcontrollers and Applications in Embedded Systems with PIC*, Delmar Thomson Learning, 2007