Hydraulic Study on Pumping Stations Equipped with Air Chamber

CLAUDIU STEFAN NITESCU, ANCA CONSTANTIN, MADALINA STANESCU
Hydraulic Engineering Department, Faculty of Civil Engineering
"Ovidius" University
Constanta, 22B Unirii Str.
ROMANIA
claudiu.nitescu@univ-ovidius.ro, aconstantina@univ-ovidius.ro,
http://www.univ-ovidius.ro/faculties/civil_eng

Abstract: Surge tank and air chamber are the most used devices to protect a pumping installation from either cavitation or excessive pressure during water hammer. These devices transform the water rapid variable movement into a slow oscillatory one. The choice of the optimal protection solution should rely not only on hydraulic, but also on technical and economic calculation. Numerical simulation of the water transient movement reveals the most effective protection method for the water pumping station SRP 4 Seimeni, Constanta county.

Key-Words: - surge tank, air chamber, pumping station, geodetic head, head loss, asymmetric hydraulic resistance

1 Introduction

Hydraulic systems should be equipped with protective devices in cases where pressure oscillation exceeds in amplitude dangerous values during hydraulic shock. These devices may diminish or even eliminate the hydraulic shock in the entire or at least in the vulnerable sections of the hydraulic installation [1],[6].

According to their design, the protection equipment may change the type of the unsteady water movement in installation, which means they may turn the rapid into a slow variable movement or they may modify the hydraulic parameters of the flow. Therefore, the means used for pumping stations protection from water hammer can be divided into two large categories:

-devices that diminish or limit the pressure oscillation amplitude without changing the feature of rapid variable water movement (e.g. check valve by pass ducts, relief valves).

-devices that turn the rapid variable water movement into a slow oscillatory one, in the whole system or at least in sections of the pumping installation (e.g. surge tank, air chamber).

In engineering practices, according to the importance of the pumping station, either one single protection device or a combination of devices may be used. The surge tank is recommended for pumping stations with reduced geodetic head. For economic reasons, the height of a surge tank is limited up to 25 m. No doubt a reduced geodetic head of a pumping station doesn't automatically require a surge tank as a protection device.

The air chamber may be used in pumping installations regardless the values of the discharge or of the pumping head. A pumping installation may be protected by a single one or by a battery of air chambers.

Numerical simulation developed by the use of automate programmes make it easy to choose the best protection device combination both from technical and economic view point.

2 Water Hammer Simulation

2.1 Air Chamber as a Protection Device

In the frame of the irrigation water pumping stations modernization, we are often required to give the best solution for water hammer protection of the discharge ducts. The discharge duct of the old pumping station SRP4 Seimeni, Constanta County is protected by a double air chamber of $10m^3$ each.

Aiming to find out the best variant of protection for this installation, we carried out a study based on numerical simulation of the water hammer phenomenon. We took into account cheaper variants, but at least as effective as the double air chamber. A special automate programme was used, a programme conceived to solve hydraulic transients by the method of characteristics.

Referring to the installation composed of pump, discharge duct, air chamber and reservoir, as it is

represented in Fig.1, we used the motion and the continuity equations under the form of finite differences, in order to use the characteristic method as they are given in [6].

In the intermediate section of the calculus node with air chamber, 5 unknowns occur: the speeds before and after this section, $V'_{j,i+1}$ and respective $V''_{j,i+1}$, water elevation in the air chamber $H_{j,i+1}$, air layer pressure $P_{j,i+1}$ and air layer volume $\tau_{j,i+1}$.

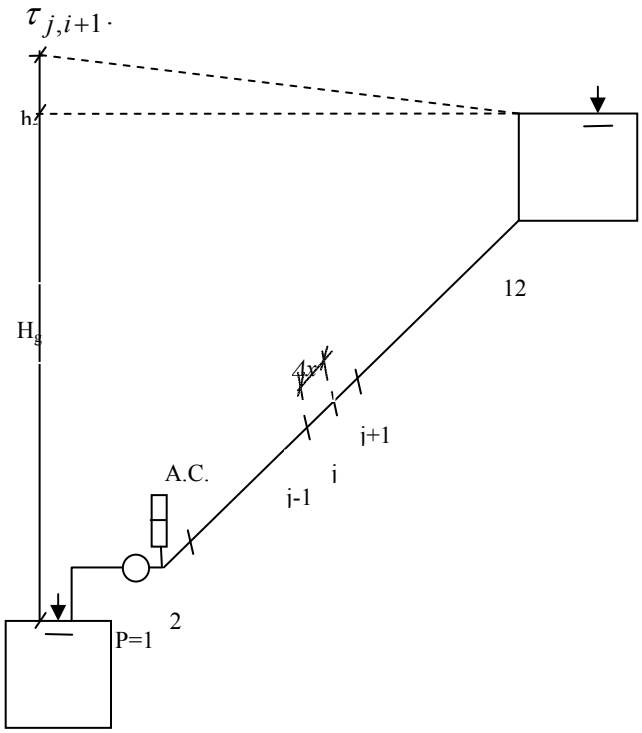

Fig.1 Pumping station with air chamber on the discharge duct

$$\begin{cases} V'_{j,i+1} - V_{j-1,i} + \frac{g}{c}\left(H_{j,i+1} - H_{j-1,i}\right) + \\ \qquad + \frac{\lambda}{2D} V_{j-1,i}\left|V_{j-1,i}\right| \Delta t = 0 \\ V''_{j,i+1} - V_{j+1,i} + \frac{g}{c}\left(H_{j,i+1} - H_{j+1,i}\right) + \\ \qquad + \frac{\lambda}{2D} V_{j+1,i}\left|V_{j+1,i}\right| \Delta t = 0 \end{cases} \quad (1)$$

The equation that gives the water pressure as a function of air pressure in the air chamber, [3] is:

$$H_{j,i+1} = Y_{j,i+1} + \frac{P_{j,i+1}}{\gamma} \quad (2)$$

where:

Y – water elevation in the chamber, with respect to a reference horizontal plane;

$P_{j,i+1}$ - pressure at the time $i+1$, deduced from the gas equation of state.

Assuming a polytropic transformation of the gas, we may write:

$$P_{j,i+1} \cdot \tau^n_{j,i+1} = P_{j,i} \cdot \tau^n_{j,i} \quad (3)$$

where: n - polytropic transformation coefficient $(n=1,0 – 1,4)$.

The air layer volume, at the time $i+1$ can be deduced as a function of the air volume at the time i and of the water velocity in the small duct that connects the air chamber and the protected duct.

$$\tau_{j,i+1} = \tau_{j,i} + \Omega(Y)\left[V_{r,i+1} + V_{r,i}\right]\frac{\Delta t}{2} \quad (4)$$

where:

$\Omega(Y)$ - air chamber horizontal section area, at the elevation Y ;

V_r - water ascending velocity inside the air chamber.

In the calculus nodes with air chamber where the head losses in the connection duct are taken into account, we have one more equation:

$$H_{j,i+1} - H_{d,j+1} = MQ_d\left|Q_d\right| \quad (5)$$

where:

M – hydraulic resistance modulus for the connection duct;

H_d – piezometric head in the air chamber;

Q_d –flow rate in and out of the air chamber.

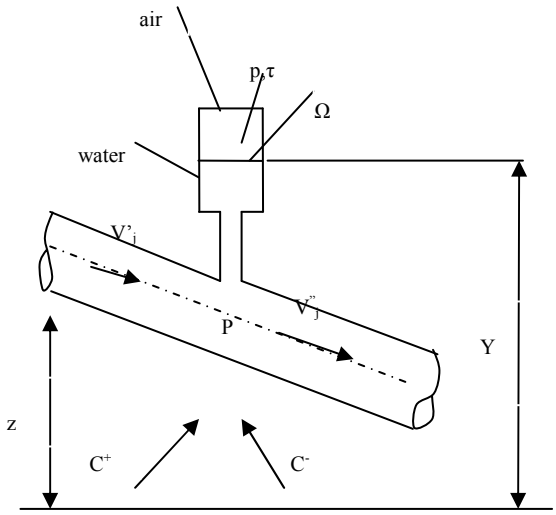

Fig. 2 Calculus node with air chamber

2.2 Case Study: Seimeni Pumping Station

SRP 4 Seimeni is a lifting pumping station that supplies irrigation water. The features of this pumping installation are: discharge of 1.3 m^3/s, at a

total head of 17.5m. In spite of the relative small geodetic head, H_g=14.50m, the air chamber resulted a more advantageous protection solution over the surge tank. The pumping installation consists of five vertically mounted pumps type MV 303 with a discharge Q_0=0.26 m^3/s, at a head H_0=20m and a rotational speed n=1485 rot/min. Each individual discharge duct is equipped with butterfly type adjusting and check valves.

The common discharge duct is concrete made and has 550 m in length and 800 mm in diameter. Downstream, right before the discharge basin, the duct is equipped with an air valve type DAD-3, which allows air intake when the pumps stop and air out when the pumps start to operate. The double air chamber is mounted nearby the station building. The features of this chamber are:

-the volume of one reservoir: 10 m^3;

-the volume of the air layer in a reservoir, at the regime water pressure: 4 m^3;

-the diameter of the connection duct of one reservoir: d=350 mm.

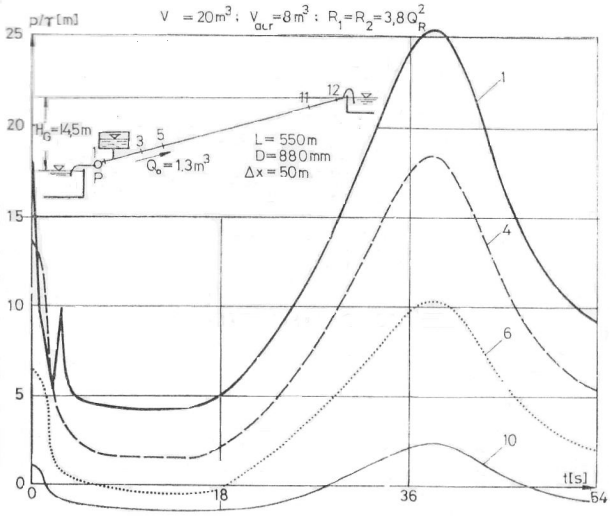

Fig. 3 Old pumping station SRP 4 Seimeni. Pressure values in the discharge duct [3]

3 Alternative Water Hammer Protection Solution

The hydraulic resistance of the connection duct between the air chamber and the protected discharge duct has an enhanced role in extreme pressure limitation. Such a local hydraulic resistance duct may be a symmetrical one, opposing the same resistance despite the way the water flows or an asymmetrical one, opposing different hydraulic resistance, according to the way of flow. The asymmetrical hydraulic resistance devices are of great technical interest, due to their possibility of differential pressure adjusting. Consequently, they allow optimal sizes of the hydraulic system.

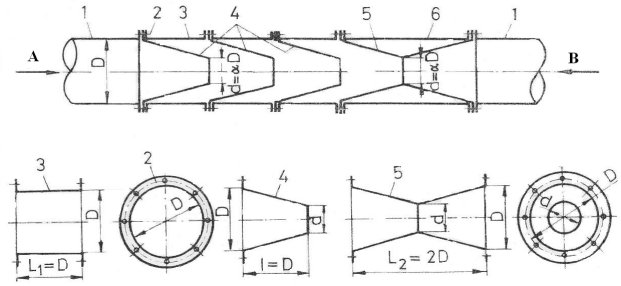

Fig.4 The device with asymmetrical hydraulic resistance, type I.C.H: 1,3,6- duct; 2- flange; 4- conical nozzle; 5- bi-conical nozzle [5].

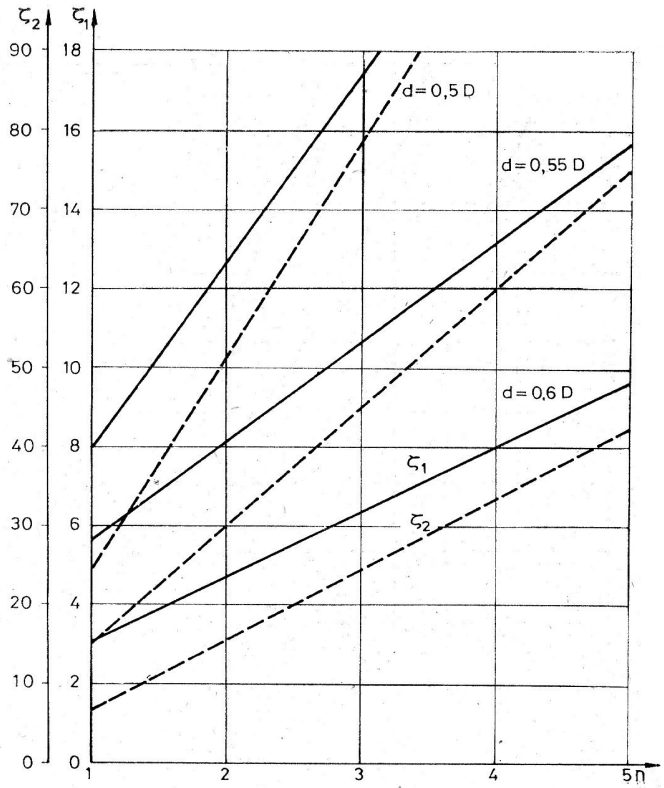

Fig. 5 Coefficients of local hydraulic resistance ζ_1 and ζ_2 as functions of the number of conical nozzles in an asymmetrical resistance device [4], [5]

The sketch of such a device is represented in Fig.4, where the ways of flowing are A and respective B.

The ratio between the inner diameter of the conical nozzle and the duct diameter is:

$$\alpha = {}^{d}/_{D} = 0.4 \div 0.6$$

The asymmetrical hydraulic resistance devices are recommended in pumping installation protection from water hammer because they are subjected to asymmetric loads that lead to large variation of pressure. For instance, a sudden stop of the pumping

station may occur in the case of power failure, but the start is slowly and deliberately made.

An asymmetrical resistance device mounted on a connection duct reduces the number of additional necessary protection devices and furthermore, improves their technical features.

We considered a more simple solution for the protection of the SRP4 Seimeni pumping station discharge duct by the use of a single air chamber connected to the protected duct through an asymmetrical hydraulic resistance type ICH. The total volume of the air chamber is 10 m^3 and the volume of air layer is 5 m^3. The asymmetrical resistance device is 1.40 m in length and consists of two conical nozzles and one bi-conical nozzle. The connection duct is 350 mm in diameter, with α=0.6.

Numerical simulation was developed for both cases: the existing protection solution, with the double air chamber and for the proposed solution, with one air chamber connected through an asymmetrical hydraulic resistance device. Pressure variation was graphically represented for both cases.

4. Results

According to the diagram presented in Fig. 5 the coefficients of local head loss for the above depicted asymmetrical hydraulic resistance device are: ζ_1 =4.75 for *A* flow way and ζ_2= 15.85 for *B* flow way.

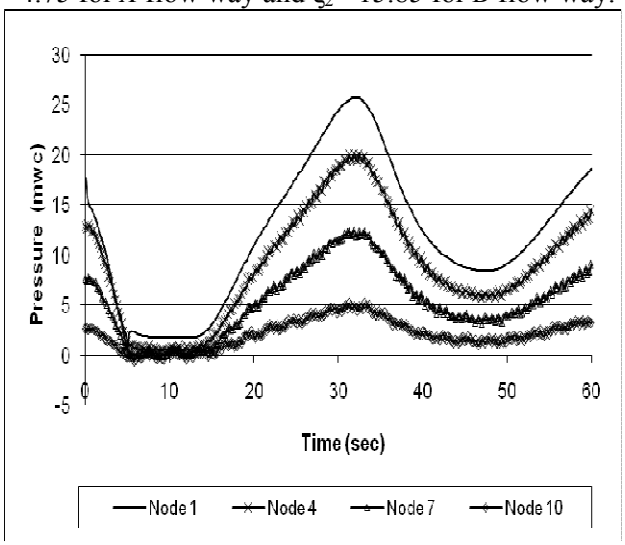

Fig.6 Pressure variation in the case of one air chamber with asymmetrical hydraulic resistance

Pressure variation obtained for the proposed variant is represented in Fig.6. Comparing the graphs in Fig. 3, for the existing solution to the graphs in Fig.6, for the proposed solution we may notice that they are very similar. Extreme pressures in node 1 are the same in both variants. That means the proposed solution is as effective as the existing one, from technical view point, but cheaper. Slight differences between graphs occur in the second half of the discharge duct. In this section, maximal pressure values rise with up to 10%, but the values aren't dangerous. The minimal pressures increase. They become positive in the most of the nodes. In the nodes 7 and 10 minimal pressures are still negative but they have greater values. For instance the minimal pressure is -0.259mwc instead of -0.528mwc in node 7 and -0.671mwc instead of -1.46mwc in node 10.

5 Conclusion

Numerical simulation is a helpful tool for the engineers in charge to decide among different technical and economic solutions regarding water hammer protection.

Referring to the modernization of the SRP4 Seimeni pumping station we may say that the proposed protection solution, using only one air chamber connected through a duct equipped with an asymmetrical hydraulic resistance device, is more effective from technical view point at a more affordable investment cost. The amplitude of the pressure oscillation during water hammer is smaller than in the case of the double air chamber.

As the protection installation is simpler it is easier to watch and maintain it.

In the case of accidental decrease of the air layer volume, the system is protected by the asymmetrical hydraulic resistance device either at high or small pressures.

References:

[1] Chaudhry H., *Applied hydraulic transients*, Van Nostrand Reinhold Company, New York, 1987.

[2] Lindenburg, Michael, *Engineer in-training reference manual*, 7th Edition, Professional publications, Inc, Belmont, CA 94002, 1990.

[3] Popescu, M., Arsenie, D.I., *Hydraulic computational methods for hydropower plants and pumping stations*, Ed. Tehnica,1987.

[4] Popescu, M., Arsenie, D.I., Vlase, P., *Applied hydraulic transients for hydropower plants and pumping stations*, Aa. Balkema, 2003.

[5] Popescu, M., *Hydropower plants and pumping stations –Transient hydraulic operation*, Ed. Universitară, 2008.

[6] Streeter, V.L., Wylie, B. E., *Hydaulic transients,* McGraw – Hill Book Company, New York, 1987.