Initial Design of Very Light Jet with Unconventional Arrangement

Purwo Kadarno, Siti Zawiah Md. Dawal, T.M. Yusoff Shah Tuan Ya, Khairi Yusuf , Nukman Yusoff, and Prasetyo Edi

***Abstract* —** Current trends in the design of very light jet aircraft have shown that in order to be economically viable and competitive, it is essential to improve the aircraft performance and operational flexibility goal, but still have an efficient cost. The application of unconventional configuration has attracted the designer to achieve that goal. This paper discusses the prospective unconventional arrangement which will be applied for very light jet aircraft. The existing Very Light Jet configuration is reviewed. New concepts of unconventional configuration for this type of aircraft are considered. The three-surface configuration is then proposed for this design project. The design process covered by this paper is only concentrate on initial design. The data from this paper can be continuing in future for the next step of design.

***Keywords* —** aircraft design, initial design, unconventional arrangement, very light jet.

I. Introduction

The importance of light business jet aircraft in operations and the unprecedented variety deployed today is growing. These aircrafts, also called very light jet, are intended to have efficient operating costs than conventional jets, and also can operate on short runways hence can play a role as an air taxi. By classification, very light jet is considered as a small jet aircraft which approved for single-pilot operation with a maximum take-off weight of less than 10,000 pounds [1].

Current trends in the design of very light jet have shown that in order to be economically viable and competitive, it is necessary to investigate new technologies which may give an improvement in performance and operational flexibility goal, but must be shown to be cost-effective. It is believed that the application of unconventional configuration and advanced technologies such as High Lift/Drag Wing (HLDW) would assist in achieving such a task.

However, the presence of unconventional configuration and advanced technologies seriously complicates design and analysis procedures. The questions of whether more advanced configuration and technology would produce significantly better results for jet aircraft remains open. This justifies the need to carryout such an advanced engineering and technology investigation.

This paper reviews the general arrangement for existing very light jet aircraft. Several unconventional arrangements for these types of aircraft are discussed. Then the initial design process of the aircraft using the proposed configuration for this project is described.

II. Very Light Jet Configuration

Designing an aircraft is a challenging task for a new designer. The designer must determines where to locate the wing, how big to make the fuselage, and how to arrange all the pieces together [2].

A selection of the general arrangement of a new aircraft design should be based on an appropriate investigation into and interpretation of the transport function and a translation of the most relevant requirements into a suitable positioning of the major parts in relation to each other. No clear-cut design procedure can be followed and the task of devising the configuration is therefore a highly challenging one to the resourceful designer [3].

The study of possible configurations should result in several sketches of feasible layouts. They will be a beginning for more detailed design, and can be regarded as a first design phase. Usually trade studies between several possible configurations will be required before the choice of the best configuration is made.

Basically, there are two main types of general arrangement for a business jet aircrafts, that is: conventional and unconventional.

A. Conventional Configuration

Low mounted wing, T-Tail, and twin podded turbofans on the aft fuselage is the most common arrangement for VLJ

Manuscript received April 8, 2010. This work was supported in part by the University of Malaya Research under Grant RG031/09AET.

Purwo Kadarno is research engineer in Department of Engineering Design and Manufacture, University of Malaya, 50603 Kuala Lumpur, Malaysia (phone: 60-146396983, fax: 603-7957-5330, email: pkadarno@gmail.com)

Siti Zawiah Md. Dawal is the project leader and Head of Department of Engineering Design and Manufacture, University of Malaya, 50603 Kuala Lumpur, Malaysia. (email: sitizawiahmd@um.edu.my)

T.M. Yusoff Shah is ecturer in Department of Engineering Design and Manufacture, University of Malaya, Malaysia. (email: tyusoff@um.edu.my)

Khairi Yusuf is senior lecturer in Department of Engineering Design and Manufacture, University of Malaya, Malaysia. (email: khairiyusuf@um.edu.my)

Nukman Yusoff is senior lecturer in Department of Engineering Design and Manufacture, University of Malaya, Malaysia. (email: nukman@um.edu.my)

Prasetyo Edi was with Department of Engineering Design and Manufacture, University of Malaya, Malaysia. He is now with the Department of Aerospace Engineering, King Fahd University of Petroleum & Minerals, Dhahran 31261, Saudi Arabia (e-mail: edi_phd@yahoo.com).

aircraft. This is because the requirements of engine ground clearance [4]. Beside engine ground clearance, this configuration has other advantages, i.e. aerodynamically clean wing and less control power for one engine out trim. The disadvantages of this configuration include no wing root bending moment relief, relatively higher cabin noise levels, heavier fuel system, large c.g. variation with variation in loading condition and engine accessibility. An example of typical general arrangement for this configuration is Cessna Citation Mustang as shown in Fig. 1.

Fig. 1 Cessna Citation Mustang

B. *Unconventional Configuration*

Demanding a large cabin and high fuel efficiency of small business jet, HondaJet is designed and developed by Honda R&D over the past few years. A unique configuration that makes the HondaJet particularly unusual is its over-the-wing engine-mount configuration (Fig. 2). With eliminating the carry-through structure needed in the aft fuselage for its engine pylons, this configuration allows a full-width cabin farther aft, hence maximized the fuselage internal space [5]. Estimated design specifications are 9,200 lb maximum take-off weight, 420-knot cruise speed at 33,000 foot, 44,000-foot ceiling and an IFR range of 1,100 nm.

Fig. 2 Honda Business Jet

Honda claims with engine nacelle located at the optimum position relative to the wing, the shock wave can be minimized, and drag divergence occurs at a Mach number higher than the clean wing configuration does. Moreover, compared to clean-wing configuration, over-the-wing engine configuration has better stall characteristics, the zero-lift angle increase by 1.2 degrees, and maximum lift coefficient increase by 0.07.

This configuration also has several advantages, i.e. wing root bending moment relief, relatively lower cabin noise levels, lighter fuel system, easy aircraft c.g. management and engine accessibility. The disadvantages include aerodynamically not clean wing, more control power for one engine out trim, and more wetted area hence increasing drag and weight due to bigger engine pylon.

Another unconventional configuration is Adam Aircraft A700, shown on Fig. 3. Design features include twin-boom configuration with swept fins and high tail-plane, low wings with dihedral on outboard panels and small winglets, and the engine pylon-mounted at the rear of fuselage [6].

The horizontal tail is a fixed tail design that includes an elevator. Pitch trim is provided by a trim tab mounted in the elevators, while yaw trim by a trim tab mounted on a rudder. With blended high-tail configuration, the aspect ratio effective of both horizontal and vertical tail will increased, hence increased tail control power. The other disadvantages with this configuration are wing mass penalty, larger interference drag, and less usable volume [7].

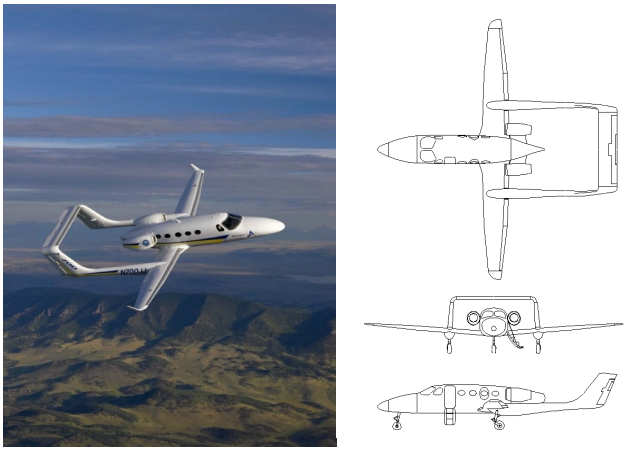

Fig. 3 Adam Aircraft A700

III. Canard Configuration

Another prospective unconventional configuration that can be applied is the canard configuration. Canard aircraft have attracted the interest of designers due to several particular characteristics. The Wright brothers' aircraft (Fig. 4) was a canard and it was an attractive concept to put the longitudinal control surface in front of the wing and out of the wing downwash and its wake. The forward plane gives an upward force to the aircraft's equilibrium, which contributes to the lift in a positive direction. Unlike the conventional layout, this will increase maximum lift and reduce the trim drag [3].

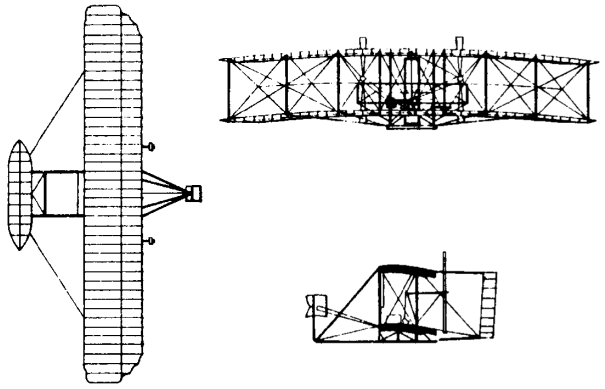

Fig. 4 The Wright Flyer

Canards were used by the Wright brothers for ensuring adequate control power, but it was difficult in providing sufficient stability. In fact, the early Wright airplanes were quite unstable, and required a well-trained pilot with quick reflexes. From the recorded movie of The Wright flyer, it shows that the Wright canards being continuously adjusted from almost full-up to full-down as the pilot responded to gusts [8]. However, as aircraft computer control becomes more sophisticated and reliable, the problem can be overcome hence increase the possibility of using the canard concept [9].

The canard must be designed so that it stalls before the wing to obtain a stable 'pitch—break'. If the wing is allowed to stall before the canard, an uncontrollable and sometimes violent pitch-up can occur. Obviously, the canard must stall before the wing with wing flaps up as well as down. To trim out the negative pitching moment due to deployment of wing flaps, the canard must be able to develop larger lift coefficients. Otherwise, this can be handled by putting flaps on the canard, by varying the sweep angle of the canard or by varying the incidence of the canard [10].

A major design problem with a canard layout is the aerodynamic induction effect of the front wing on the rear wing. The vortex system generated by the front wing will influence the rear wing, however it depends on relative wing area and wing span sizes, longitudinal and vertical separation between the wings, and the angle of attack.

The canard tip vortex will induce an upwash on the wing outboard of the canard span. At the same time this canard tip vortex will induce a downwash on the wing inboard of the canard span. This results in poor induced drag behaviour of the wing and also increases the root bending moment of the wing.

These effects can be reduced by locating the canard far forward and below the wing, and applying opposite camber and twist to the wing at the wing station corresponding to the canard span [10].

IV. Three Surface Configuration

In some design proposals, a three surface layout providing both aft-tail and lifting-canard surfaces, has been recommended to split the balancing load and the control loads between front and rear surfaces. This configuration allows the use of the lifting-canard for reduction of wing induced drag without the difficulty of utilising wing flaps like on a canard-only configuration.

The three-surface aircraft theoretically gives minimum trim drag. When generating lift for trim purposes, a canard or aft-tail will change the aircraft total lift distribution, which raises total induced drag. On a three-surface configuration the canard and aft-tail can act in opposite directions, therefore negating each other's effect upon the total lift distribution [8].

Although the aerodynamic stability and control features are simplified by this arrangement, the additional weight, mechanical complication, and interference drag associated with the extra surfaces become the disadvantages. [8]

One example of the aircraft with three surface layouts is Piaggio P-180 Avanti (Fig. 5). Avanti is a twin pusher-turboprop business aircraft [6]. Among the design features of Avanti are three-surface control with fore plane and T tail with pusher turboprop installed on the wing and the aft of the cabin, which claimed can reduce cabin noise and propellers vortices in the wing.

Fig. 5 Piaggio P-180 Avanti

Moreover, the application of three surface layouts on Piaggio Avanti have several advantageous, includes [6,10]:

a) The three surface layout gives stability and allows for minimization of induced trimmed drag over a wider range of center of gravity.
b) Structural weight savings since the wing torque box, the aft pressure bulkhead and the main landing gear share the same primary structure in the fuselage.
c) This configuration allows unobstructed cabin with maximum headroom to be placed forward of mid-mounted wing carry-through structure
d) Required wing area is reduced by 34 per-cent because lift from foreplane allows horizontal tail to act as lifting surface, which also makes a major contribution in reducing drag and increasing fuel efficiency.

Referring to the development of Avanti, with the proper design the major drawback of three surface configurations, that

is additional weight and interference drag associated with the extra surfaces, can be diminished. Therefore, three surface configurations will be applied in this design project.

V. Design Requirements and Objectives

The aircraft that will be designed during this project is desired to be a light business jet with optimum technology and performance, yet still have competitive price. Moreover it is expected to design with no big wing-body fairing and 'clear' cabin for minimizing the drag and providing spacious cabin without enlarge the cabin cross-section. Below is listed the design requirements and objectives of the VLJ that expected to be fulfilled during the design process in this project.

- Designation: VLJ-EDM1.
- Accommodation for 1 crew and 5 passengers
- Range with maximum payload should be reach 1,500 nm.
- Maximum take-off weight (MTOW) should be less than 8,000 lbs.
- Maximum cruising speed should reach 425 KTS with optimum cruising altitude at 41,000 ft.
- Stalling speed at flaps down condition must less than 90 KTS.
- Certified take-off run is 800 meter.
- Landing run maximum is not more than 690 meter

VI. General Arrangement

The selected arrangement for this project is three surface configurations with low-mounted wing. With this configuration, the requirement that the airplane is expected to have no big wing-body fairing and provide 'clear' cabin can be achieved. Because the wing will put at the rear part of fuselage and below the cabin floor, but still have no big wing-body fairing at the bottom part of fuselage.

Another advantage of the low-wing configuration is in the design of the landing gear. Since the landing gear can be retracted directly into the wing box, one of the strongest elements of the aircraft structure [11]. The conceptual sketch of VLJ-EDM1 is shown in Fig. 6.

Since the design requirement of the cruising speed is 425 KTS with optimum cruising altitude at 41,000 ft, turbofan is selected as the engine type [10]. This engine is design to be podded at the rear of the fuselage. Even a podded engine has higher wetted area than a buried engine, but gives considerable advantages, includes produce less noise in the cabin and easy access for maintenance, hence made it standard for commercial and business jets [8].

The location of engine at the rear of fuselage gives several advantages, including provide a clean wing, allows a short landing gear, and small asymmetric thrust after engine failure [3], [8].

To achieve higher Cl_{max} values for takeoff and landing without penalizing an airplane's cruising performance, flaps are used to adjust temporarily the geometry of the airfoil. Single slotted flap configuration is chosen, with the maximum achievable increment in Cl_{max} approximately 1.5 [12].

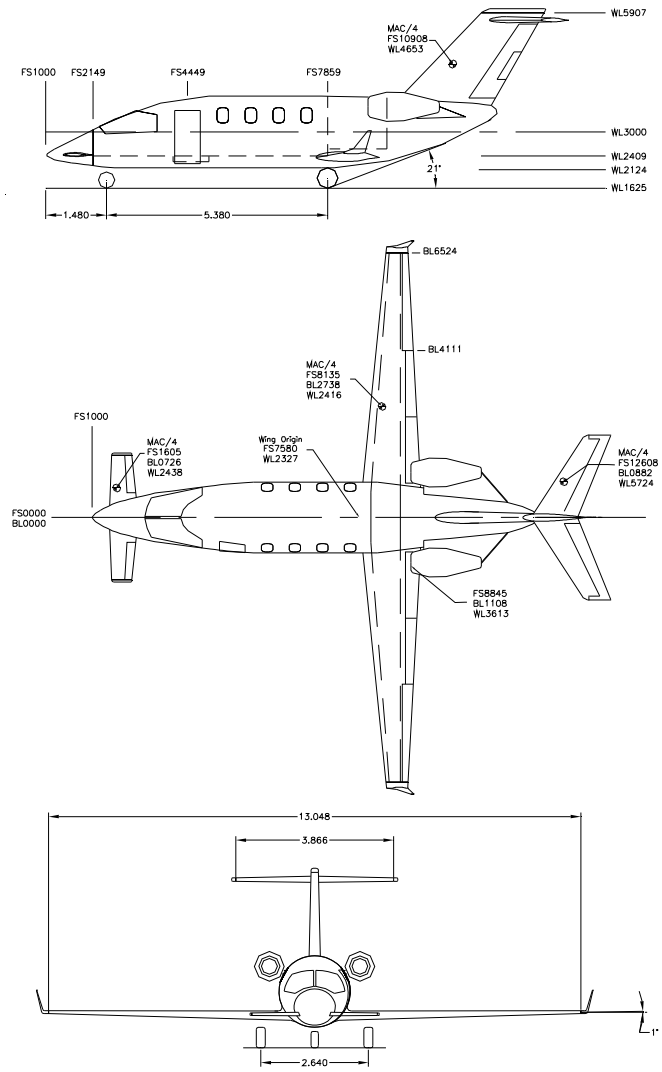

Fig. 6 Conceptual sketch of VLJ-EDM1

Retractable landing gear will be selected due to the high cruise speed requirement on the design, so it will minimize the drag. Tricycle landing gear configuration with two main wheels aft of the c.g. and an auxiliary wheel forward of the c.g. is chosen. With this configuration, the aircraft is stable on the ground and can be landed with the nose up position. Moreover, it improves forward visibility on the ground and allows a flat cabin floor for passenger and cargo loading [8].

VII. Aerodynamic Wing Design

The main goal of the wing design is to obtain the highest possible of wing efficiency (*L/D*) in cruise flight while maintaining good stall characteristics. The application of natural laminar-flow (NLF) airfoil is considered to be one of the key technologies to achieve this goal.

An example of NLF airfoil that suitable for the applications of business-jet operated at high speed is the NASA High Speed HSNLF (1)-0213 airfoil [13]. This airfoil has a high

drag-divergence Mach number and small nose-down pitching moment [14]. However, the volume of fuel tank in the wing is limited since the thickness is 13%. Hence in order to increase the fuel that can be carried in the wing, the new airfoil with 15% thickness of HSNLF (1)-0213 airfoil has been designed an named as HSNLF 0215 in this project. The geometry of airfoil HSNLF(1)-0213 and HSNLF-0215 is plotted in Fig. 7.

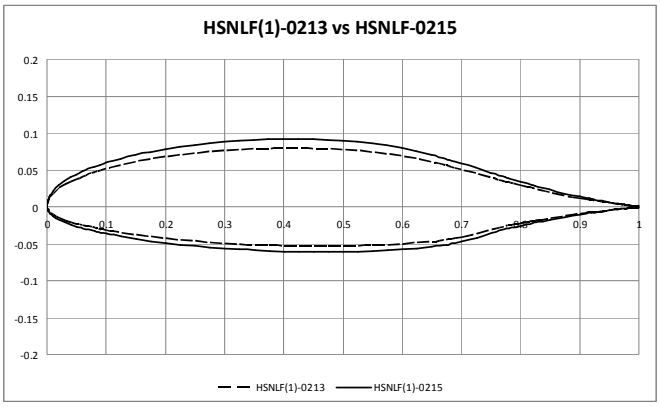

Fig. 7 Geometry of airfoil HSNLF(1)-0213 and HSNLF-0215

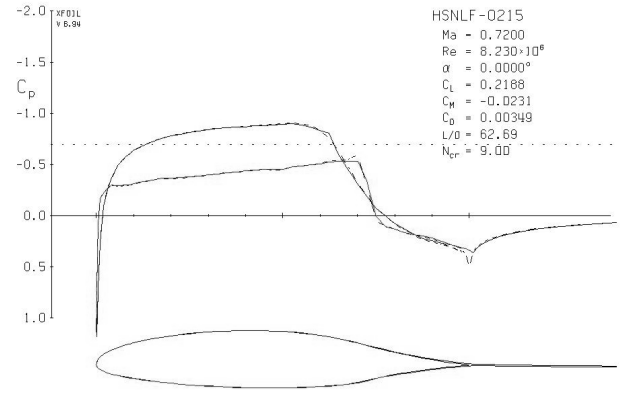

Fig. 8 Pressure distribution of HSNLF-0215 at cruise condition

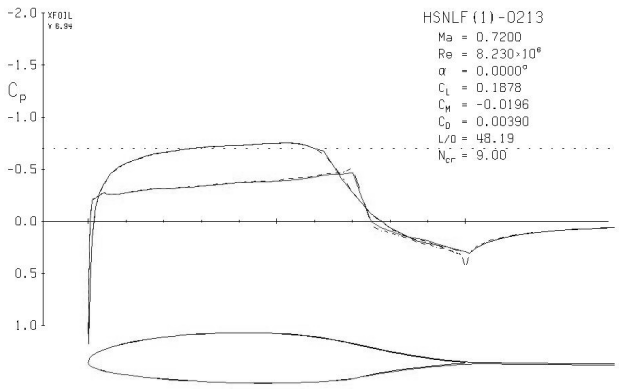

Fig. 9 Pressure distribution of HSNLF(1)-0213 at cruise condition

In this early stage of design, the analysis of the pressure distributions of the new airfoil is predicted with XFOIL 6.94 code. XFOIL is an interactive program for the design and analysis of subsonic isolated airfoils written by Marc Drella and Harold Youngreen [15]. Pressure distribution for airfoil HSNLF-0215 at 0 degree for cruise condition is shown in Fig. 8, while for NASA HSNLF(1)-0213 is shown in Fig. 9.

The comparison of lift coefficient (C_l), drag coefficient (C_d), moment coefficient (C_m), and ratio of lift over drag (L/D) for these airfoils for several angles of attack (α) at cruise condition is shown in Table 1.

TABLE I
THE PERFORMANCE COMPARISON OF AIRFOIL HSNLF(1)-0213 AND HSNLF-0215 AT CRUISE CONDITION

α	Airfoil	C_l	C_d	C_m	L/D
-1	HSNLF(1)-213	0.0189	0.00581	-0.0184	3.253012
	HSNLF-215	0.0596	0.00608	-0.023	9.802632
0	HSNLF(1)-213	0.1878	0.0039	-0.0196	48.15385
	HSNLF-215	0.2188	0.00349	-0.0231	62.69341
1	HSNLF(1)-213	0.3745	0.00385	-0.0221	97.27273
	HSNLF-215	0.4211	0.00422	-0.0274	99.78673
2	HSNLF(1)-213	0.533	0.00675	-0.0222	78.96296
	HSNLF-215	0.5954	0.00609	-0.0285	97.76683
3	HSNLF(1)-213	0.6903	0.00897	-0.0204	76.95652
	HSNLF-215	0.7131	0.01104	-0.0261	64.59239
4	HSNLF(1)-213	0.8415	0.01182	-0.0173	71.19289
	HSNLF-215	0.7954	0.01541	-0.0155	51.61583

The ratio of lift over drag (L/D) for HSNLF-215 have higher value for alpha of -1 to 2, while for alpha of 3 and 4 HSNLF(1)-0213 have higher L/D. Hence it can be concluded that for cruise condition airfoil of HSNLF-0215 have better performance. However, this justification needs further analysis that will be done during the next step of design phase.

In this project, the new airfoil HSNLF-0215 is used at the root of the wing, while at the tip is NASA HSNLF (1)-0213. Following are the detail wing geometric parameters that shown on Fig. 10.

- Area (S): 13.625 m^2
- Aspect Ratio (AR): 12.5
- Span (b): 13.05 m
- Sweep angle at c/4: 4 deg
- Root chord (Cr): 1.546 m
- Tip chord (Ct): 0.541 m
- Taper ratio (λ): 0.35
- Thickness ratio @root: 0.15
- Thickness ratio @tip: 0.13

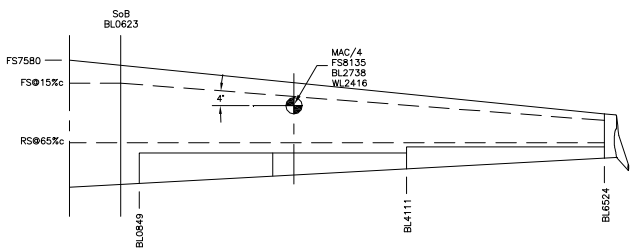

Fig. 10 Wing of VLJ-EDM1

The winglets are applied at the tip of the VLJ-EDM1's wing. The winglet is chambered and twisted so that the rotating vortex flow at the wing tip increase the lift generated at the wingtip and reduce the lift-induced drag caused by wingtip vortices, hence improving the lift-to-drag ratio [8].

VIII. Conclusion

The VLJ-EDM1 is designed with three surface configurations and intended to have better performance than the competitor aircraft. The additional weight and interference drag due to the extra surface can be reduced with the appropriate design. The High Speed Natural Laminar Flow airfoil is applied to achieve better wing efficiency.

The design process discussed in this paper is the first iteration of the project. The design process in this stage is based on many historical data. Some of the value is assumed by taking the average value from the competitor aircraft. Further iteration is needed for further design and performance improvement.

References

[1] J. Croft, "Very Light Jets – Boom or Blip?" in *Aerospace America*, May 2006, pp 32 – 36.

[2] P. Edi and J. P. Fielding. "A Civil Transport Wing Design Concept Exploiting a Variable Camber Wing with Hybrid Laminar Flow Control," *Journal of Aircraft, AIAA*, Volume 43, Number 4, July – August 2006, pp 932–940

[3] E. Torenbeek, *Synthesis of Subsonic Airplane Design*. Delft University Press & Martinus Nijhoff Publishers, 1982.

[4] P. Edi, et al., "The Design of Light Jet Aircraft," *WSEAS Transactions on Applied and Theoritical Mechanics*, Issue 2, Vol.4, April 2009, pp. 85–94.

[5] [M. Fujino, "Design and Development of the HondaJet," *Journal of Aircraft*, Vol. 42, No. 3, May–June 2005, pp. 755–764.

[6] P. Jackson, *2004-2005 Jane's All The World's Aircraft*. Thanet, Great Britain, 2004.

[7] D. Howe, *Aircraft Conceptual Design Synthesis*. Professional Engineering Publishing Ltd., UK. 2000.

[8] D.P. Raymer, *Aircraft Design : A Conceptual Approach*. American Institute of Aeronautics and Astronautics Inc., Washington, 1989

[9] R.L Jenkinson, P. Simpkin, P, and D. Rhodes, *Civil Jet Aircraft Design*. MPG Book Ltd., Great Britain, 1999.

[10] J. Roskam, *Airplane Design part I,II,III,IV,V,VI,VII, VIII.* Roskam Aviation and Engineering Corp., Kansas, 2004.

[11] J.D. Anderson, *Aircraft Performance and Design.* Mc.Graw Hill, USA, 1999.

[12] B.W Mc.Cormick, *Aerodynamics, Aeronautics, and Flight Mechanics*. John Willey and Sons, Inc., New Jersey, 1995.

[13] J.K. Viken, et al., "Design of the Low Speed NLF(1)-0414F and the High Speed HSNLF(1)-0213 Airfoils with High-Lift Systems," Research in Natural Laminar Flow and Laminar-Flow Control,NASA CP-2487, Pt. 3, 1987, pp. 637–671.

[14] M. Fujino, et al., "Natural-Laminar-Airfoil Development for a Lightweight Business Jet," *Journal of Aircraft*, Vol. 40, No. 4, 2003, pp. 609–615.

[15] M. Drella and H. Youngreen, *XFOIL 6.9 User Guide*. 11 January 2001.