Integration of WSN-based platform in a homecare monitoring system

R. Dobrescu, D. Popescu, M. Dobrescu, and M. Nicolae

***Abstract*—**The paper presents a platform, which enables the remote connection, via Internet, to assisted persons and their environment. The platform is integrated in a homecare monitoring system able to monitor and diagnose patients outside hospital and also to control the home ambiance. The hardware architecture of the homecare monitoring system, which is based on a wireless network, contains three levels: basic level (persons/WSN-based platforms and home ambiance/smart house), intermediate level (primary care and emergency interventions), and high level (hospital and city hall services). In this way, several expensive resources like experts and powerful computers can be shared at distance through Internet in order to optimize the costs and to increase the diagnosis accuracy and the treatment efficiency by reducing the time to intervention. The experts from the diagnosis center (hospital) can extrapolate the data collected from the basic level and intermediate level in order to estimate the behavior of the homecare monitoring system.

***Keywords*—**wireless sensor network, homecare system, remote sensing and diagnosis, hardware architecture.

I. Introduction

PROGRESS in wireless sensor networking and internet facilities have opened up new opportunities in home automation for healthcare. These smart systems allow the chronically ill people, elderly and disabled people to stay in their homes, instead of moving to a costly health care facility. Every monitored (assisted) person becomes a mobile sensor node i (i = 1,2,..,n), while home ambiance monitoring system is a fixed sensor node j (j = 1,2,…,m). Thus, the wireless sensor network is hybrid, containing both mobile nodes and fixed nodes (Fig. 1). Other mobile nodes are the emergency nodes: rescue cars, police cars, and fire trucks. Besides smart homes, other fixed nodes are: primary care nodes (general practitioner) and Help Center (Hospital and Local authorities). In terms of functionality, the nodes are on three levels:

► Basic level contains nodes for data acquisition from monitored patients and their homes (inside and outside smart home).

► Intermediate level contains primary care nodes and emergency nodes.

► High level contains an expert center named Help Center (Hospital and Local authority).

The rate of collection of data at basic level should be higher in this type of network than in many environmental applications. Efficient communication and processing are essential. Event ordering, time-stamping, synchronization and quick response in emergency situations are also required.

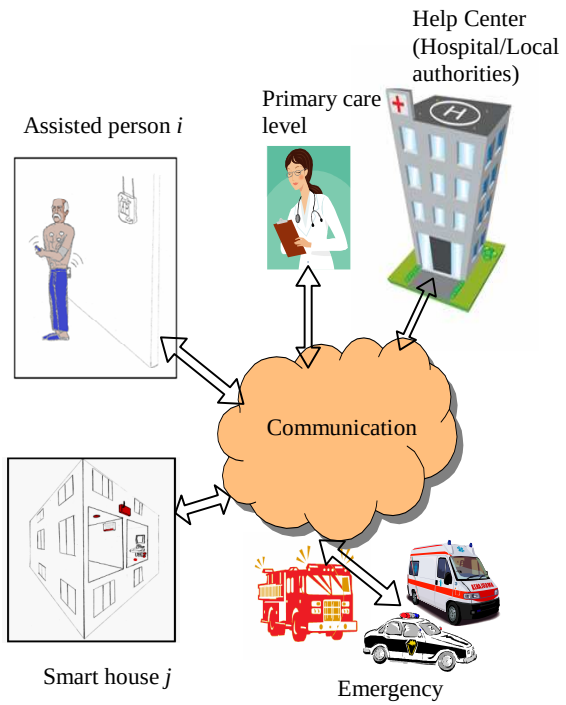

Fig. 1 WSN configuration for homecare monitoring

Sensors and other devices must operate with enough reliability to yield high-confidence data suitable for medical diagnosis and treatment. Since the network will not be maintained in a controlled environment, devices must be robust [1]. The integration of different types of sensors, RFID tags, and back-channel long-haul networks may necessitate new and modular node architectures [2].

Patient tracking can be considered at three levels: symbolic (e.g., a room number), geographical (e.g., GPS coordinates of a patient on an assisted living area) and relational (e.g., a pager or SMS connection) [3].

Manuscript received June 29, 2010. This work was supported in part by the Ministry of Education and Research under Grants No. PN2 81-060/2007 and PN2 11-040/2007.

R. Dobrescu, D. Popescu, M. Dobrescu and M. Nicolae are with *Politehnica* University of Bucharest, Automatic Control and Computers Faculty, Bucharest, Romania (phone +40214029105, email: rd_dobrescu@yahoo.com, dan_popescu_2002@yahoo.com.

Due to the heterogeneity present in the network, communication between devices may occupy multiple bands and use different protocols. In order to avoid interference in the increasingly crowded unlicensed ISM band, biomedical devices may use the WMTS band (wireless medical telemetry services, at 608 MHz) [4]. The homecare network must provide middleware interoperability between devices and support unique relationships among devices such as implants and their outside controllers [5]. In-building operation has more multi-path interference due to walls and other obstructions, breaking down the correlation between distance and connectivity even further. Unwanted emissions are likely to be rigorously restricted and even monitored due to safety concerns, particularly around traditional life-critical medical equipment.

Data may be aggregated and mined at multiple levels, from simple on-body filtering to cross-correlation and history compression in network storage nodes [6]. Limited computational and radio communication capabilities require collaborative algorithms with energy-aware communication. Richly varied data will need to be correlated, mined and altered.

As a result, the main requirements for wireless homecare monitoring networks are [7]: real-time data acquisition and analysis, reliability, robustness, patient tracking, object detection and recognition, interoperability, communication amid obstructions and interference, multi-modal collaboration, multi-tiered data management, and energy conservation.

We propose wireless sensor network (WSN) architecture for smart homecare that possesses the essential elements of each of the future medical applications, namely:

- Integration with existing medical practices and technology,
- Real-time, long-term, remote monitoring,
- Miniature, wearable sensors, and
- Assistance to the elderly and chronic patients.

Solutions integrate intelligent sensors into portable devices coupled with appropriate data acquisition modules and medical high- quality services. The research aims for disease management, rehabilitation and treatment at the point of need.

The paper presents a node architecture which enables the integration of basic nodes in smart homecare monitoring systems.

There were several projects that focus on this E-Health topic. One very similar example is the AMON system [11]. Already tested for two and a half years, this EU IST sponsored project proved the efficiency of the tele-monitoring system including a portable telemedical monitor, a wearable medical monitoring and alert system targeting high-risk cardiac/respiratory patients. The system includes continuous collection and evaluation of multiple vital signs, intelligent multiparameter medical emergency detection, and a cellular connection to a medical center. Technically, the system described in this paper offers the same medical facilities with a supplementary advantages assured by an evolved processing and communication technology. By integrating the whole system in a safe and reliable enclosure and applying low-power design techniques, continuous long-term monitoring can be performed without interfering with the patients' everyday activities and without restricting their mobility.

II. Acquisition Module of the Basic Mobile Node

As can be seen in Fig. 2, the devices attached to an assisted person should be treated as a mobile node called patient wireless node (PWN). The requirements for PWN are the following: portability, lightweight, high supply autonomy, easy operated interface, capability of sensing medical signals, and wireless communication support. PWN is fixed on the patient and acquires standard medical signals like electrocardiogram ECG, blood oxygen saturation SpO_2, heart rate HR, blood pressure BP and body temperature BT.

The significance of the notations in Fig. 2 are the following: P – patient, SM – sensor module, T – RS232 interface, D – real time display, A – alarm, SPU – signal processing unit, UC – user commands, MU – memory unit, DT – data transmission module, PCU – processing &transmission unit.

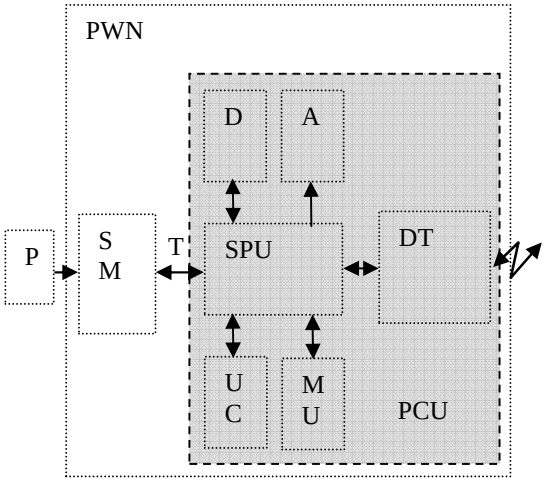

Fig. 2 PWN structure

For remote healthcare applications, small size and weight of PWN sensors are sine-qua-non conditions. Installing large or heavy sensors on the human body is impossible. On the other hand the PWN sensors must be produced in great numbers and with a cost as low as possible. This makes the task of installing such sensors on patient much easier.

Some examples of envisioned missions where the WSNs can quickly make an impact are the following [7]:

- *Sleep apnea*. Every night, network alerts provider and patient if oxygenation falls below a threshold. Monitoring can continue while treatment efficacy is assessed.
- *Journaling support*. Journaling is a technique recommended for patients to help their physicians diagnose ailments like rheumatic diseases. Patients record changes in body functions (range of motion, pain, fatigue, sleep, headache, irritability, etc), and attempt to correlate them with environmental, behavioral, or pharmaceutical changes.
- *Cardiac health*. Cardiac arrhythmia is any change from the normal beating of the heart. Abnormal heart rhythms can cause the heart to be less efficient, and can cause symptoms such as

dizziness, fainting, or fatigue. In a homecare setting, wearable EKG sensors can monitor for the condition continuously, over days or weeks, until the event occurs [8]. The recorded data is promptly sent to the physician for analysis. If the event is serious enough, the emergency communication channel may be used to call for help, or it may be dispatched automatically.

PWN cooperates with a fixed node, located in the house and called home wireless node (HWN). This node takes the data from PWN and from the sensors of home ambiance monitoring system, produces a primary data processing and communicates with nodes on intermediate level or high level. Another task of HWN is to provide video surveillance of the assisted person in order to signal failures.

HWN structure contains two functional modules: module for acquisition, processing and communication and power module. The first contains four functional blocks: sensory data acquisition, video acquisition, digital processing and communication. As you can see in Fig. 3, this module is developed around a DSP. This is because DSP gives designers the best combination of power, performance, price and flexibility and allows them to quickly deliver their real-time applications to the market [9]. The programmable flexibility of DSP enables developers to implement complex algorithms in software. Not only can a DSP support a video codec like MPEG-2 and easily handle different resolutions with a simple software upgrade, but it can implement emerging codecs and standards as they arise without hardware redesign. It is used the High-Performance, Low-Power, Fixed-Point DSP TMS320VC5509A with 5-ns Instruction Cycle Time, 200 MHz Clock Rate, based on the TMS320C55x DSP generation CPU processor core. The C55x™ DSP architecture achieves high performance and low power through increased parallelism and total focus on reduction in power dissipation.

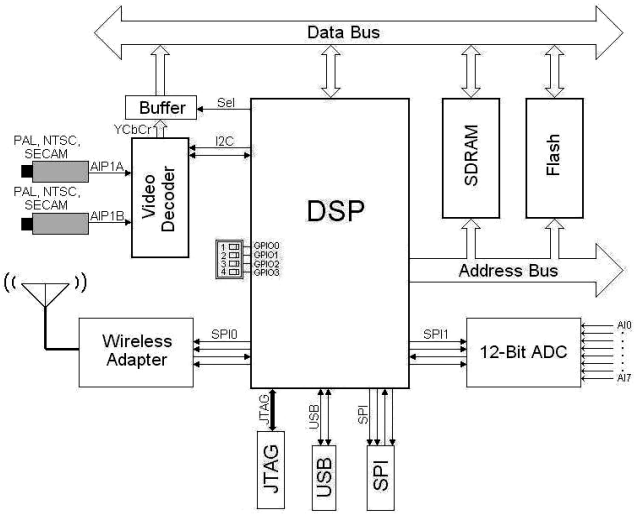

Fig. 3 HWN structure: block diagram of the acquisition, processing and communication module

The proposed homecare node integrate a coherent set of interacting portable and fixed devices, while preserving person mobility and independence and bringing optimum assistance to medical support. This integration includes the following features:

- Automatic detection of falls, considered by professionals as a major risk for elderly and disabled people;
- Automatic monitoring of vital medical physiological parameters such as ECG, SpO_2, HR and BP.
- Communication of physiological parameters and voice between the user and external intervening parties such as physicians (primary care), social institutions (local authorities).

III. Communication Modules of the Basic Nodes

Wireless communication tends to be one of the major trends in medical applications to increase usability and comfort in the long time patient monitoring. Inside the network shown, nodes can communicate with each other. PWN can communicate over short distances with HWN and collection nodes of the car rescue or hospital. This standardization enables integration of WSN-based platforms in an advanced homecare monitoring system. In normal cases, over long distances the communication of PWN with primary care level and help center is provided via correspondent HWN.

The monitored parameters are wireless and transmitted to HWN that is also connected to the public phone network. HSW processes and relays the received parameters and sends alarms to the external people such as socio-medical monitoring centers, neighbors and medical doctors, whoever is best suited to intervene depending on the type of alarm. When the link is established, the user may speak with healthcare professionals.

In order to choose the proper technology for communication infrastructure, in Fig.4 a comparison between available wireless communication technologies was made [10].

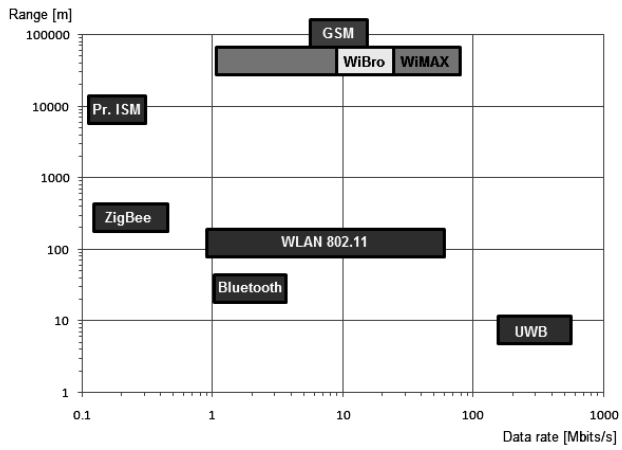

Fig. 4 graphical representation of wireless technologies performances.

For technology selection, two important features are represented on the axes, namely maximum distance and data rate, both in logarithmic scale. The area of each technology representation figures the level of energy consumption approach in design of the respective technology. A small area represents a standard with energy consumption optimization;

instead a wide area represents a technology which was not designed for energy efficient.

Based on requires demanded by the mobile sensor network, this representation can be seen like a guide from which, can be chosen the suitable wireless technology for a communication module. An example of choice of the proper technology is presented in Table I where the eliminatory demand was low power consumption.

TABLE I
LOW POWER WIRELESS TECHNOLOGIES

		Range	
		Low	Wide
Data rate	Low	ZigBee	GSM(GPRS)
	High	UWB	WiBro, GSM(HSDPA)

Because the UWB technology (Ultra Wide Band) is designed for PANs (Personal Area Network) and has a covering range of 10m, it also loses its viability in the mobile sensor network field. Finally we remain only with two options for communication infrastructure technology, ZigBee (practically it was especially develop for such application as mobile sensor networks), and GSM through its lower cost data transfer services GPRS and EDGE.

The application requirements and the limitation imposed by building a mobile node, determined us to use an AT86RF230 transceiver from ATMEL. The technical characteristics of the AT86RF230 transceiver, which recommended it for our application, are:

- High Performance RF-CMOS 2.4 GHz Radio Transceiver Targeted for IEEE 802.15.4 and ZigBee Applications
- Programmable Output Power from -17 dBm up to 3 dBm
- Receiver Sensitivity -101 dBm
- Ultra-Low Power Consumption: SLEEP- 20 nA, RX- 15.5 mA, TX- 16.5 mA (at max transmit power of 3 dBm)
- Fast registry and buffer access via a SPI interface
- Industrial Temperature Range: -45 ^{o}C to 85 ^{o}C

Its characteristics are consistent with our requirements for a low-power, cheap, modular, reliable, mobile node. Using this transceiver, our platforms are able to communicate acquired information to a management node. This node is capable to transmit date over long distances to a monitor and command centre.

The IEEE 802.15.4 standard specifies that communication should occur in 5 MHz channels ranging from 2.405 to 2.480 GHz. In the 2.4 GHz band, a maximum over-the-air data rate of 250 kbps is specified, but due to the overhead of the protocol the actual theoretical maximum data rate is approximately half of that. While the standard specifies 5 MHz channels, only approximately 2 MHz of the channel is consumed with the occupied bandwidth. At 2.4 GHz, 802.15.4 specifies the use of Direct Sequence Spread Spectrum and uses an Offset Quadrature Phase Shift Keying (O-QPSK) with half-sine pulse shaping to modulate the RF carrier.

The transceiver is controlled by the central processing unit of the node, a DSP microprocessor. In order to ensure the modularity of the system, we have chosen our electronic components so that the communication between them is standardised.

IV. EXPERIMENTAL RESULTS

Extensive tests have been made to quantify the efficacy and reliability of this monitoring system with respect to the physiological signals. The results obtained have confirmed the expected performance:

- Reliability and accuracy of parameter acquisition in working conditions conform to accepted medical requirements, specifications and standards.
- Signal processing such as noise reduction, parameter extraction and data fusion give sufficient information for decision making.
- In-house wireless communication is adequately reliable and the transmission range meets the expectations (from 10–200 m according to the application, for example, 20 m in the home, 200 m in the workplace). It complies with electromagnetic regulations. In addition, data security, confidentiality and authenticity are ensured by protocol, for example, Bluetooth.
- The overall power consumption that is necessary for the operation of accelerometers, signal processing and sensors in a small portable system has been achieved with the use of a novel power-management systems, which extend battery life to years.

Next we present the results of the monitoring of a patient during 24 hours. The messages were sent at an interval of 15 minutes, the amount of transmitted data being about 450 kB. For the transmission, FTP through GPRS was used. Table II presents the measured signals types.

TABLE II TYPES OF MEASURED SIGNALS

Parameter	**Range**	**Freq Hz**	**Sensor or method**	**Bit rate for 12 bits A/D**
BP	10 – 400 mmHg	60	Strain gage integrated	1.44 kb/s
Pulmonary arterial BP	0 – 50 mmHg	50	Strain gage integrated	1.2 kb/s
Central venous BP	0 – 50 mmHg	50	Strain gage integrated	1.2 kb/s
Electrode ECG	0.5 - 4 mV	250	Electrodes on skin	18 kb/s
SpO_2	80 – 99%	30	two photodiodes	1.44 kb/s
HR	4 – 25 l/min	20	Thermistor	0.48 kb/s
BT	32 – 40 ^{0}C	0.1	Thermistor, thermocouple	0.0024 b/s

Fig. 5 shows the download rate during 24 hours of a 450kB file. One can see that this rate was in the range of 27 – 32 kbps, in average about 30 kbps, with only 2 exceptions.

In Fig 6 one can see and the download duration (for files of variable length (between 1 and 2000kB). One can observe that

the duration growth proportional with the file dimension (about 3 minutes for 450kB)

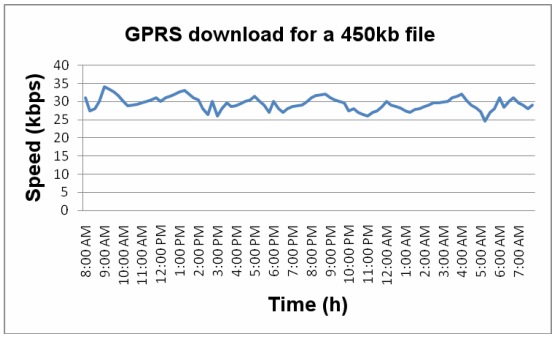

Fig. 5 GPRS download speed for 24 hours recorded data

The software of communication module is divided in a communication part and an application part. The link between the communication and application part is the dictionary of objects. The communication part contains the task of communication in network and a real time kernel that includes a task launcher, a Round Robin scheduler, resource sharing flags and handles of interrupts. The application part contains up to seven tasks witch solve all the equipment demands less those in connection with the communication in network.

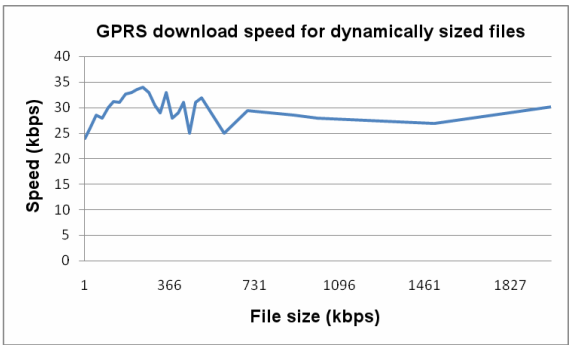

Fig.6 Download speed according to the file dimension

The link between the communication and application part is the dictionary of objects. In Fig.7 it is showed the software structure.

Each task has a status flag in FLGX byte and a mask flag in MASX byte. Thus the bit 0 of FLGX, called flgx_0 is the status flag of task number 0, task_0, while bit 0 of MSCX, mscx_0 is the mask flag of task_0, bit 1 - flgx_1 and mscx_1 for task_1 and so on. A task is active or inactive if the mask flag of this task is set or not. A task is ready to be launched in execution if the status flag of this task is set and it is cleared after the task was launched.

The launching in execution of a task can be prepared in an interrupt service routine different to the real time interrupt service routine, in other task or in the task scheduler. The real time interrupt service routine includes the task scheduler. It prepares the launching in execution of tasks which should run periodically (base time, multiple of base time, seconds, minutes, etc.). These tasks have one counter of launching and a constant of launching (initial value of counter).

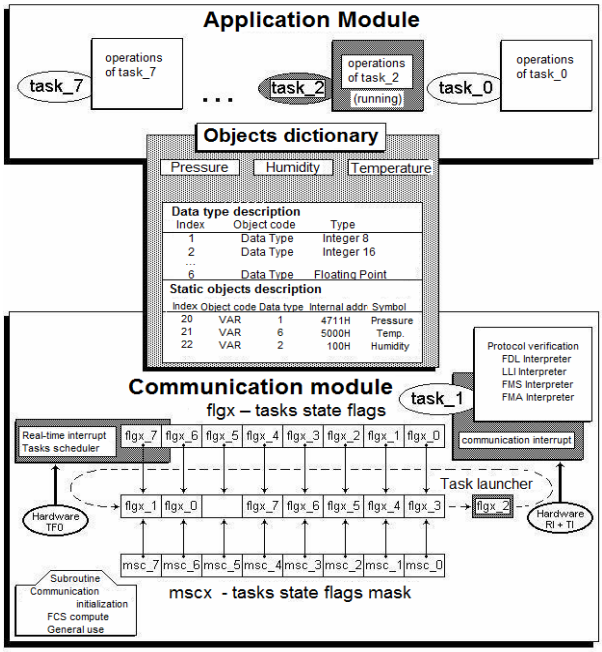

Fig.7 Software architecture of communication module

The counters of launching are decremented with one to each interrupt of real time. If the launching counter of one task becomes zero will be set the status flag of this task and the counter will be reinitiate. The task will be launch in execution only if it is active (its mask flag set). The task launcher is the main loop of software and it is included in the real time kernel.

The task number 1, task_1, is allocated for communication in network. This task, together with task launcher, task schedule, real time interrupt service routine, and communication interrupt service routine form the communication part. For an existing network and for participants to communication which occupy the same hierarchical position, the software differences appear only to level of application part and to the dictionary of objects.

V. Conclusions

We consider that this approach of using mobile sensor networks for homecare monitoring systems is a fair one in this fast growing domain. Assignment of two nodes: one mobile, for assisted person, and one fixed, for home ambiance, make possible wireless connection of patient node to different network nodes: home node, ambulance node, GP node or hospital node. Further, we concluded that the best available solution for communication system is ZigBee, for short distances, and GPRS, for long distances.

Concerning the proper choosing, regarding the complexity of algorithms running on the node, the processing core of HWN node is a DSP. At this time the software architecture is tasted on an 8-bit microcontroller platform. This explains why

the software is divided in up to eight tasks: one task, which form the communication part and the remained seven tasks grouped together in the application part. The next step is to implement this architecture on a 32-bit DSP platform end extend the number of tasks to this value, this way obtaining a more powerful software kernel.

The future of WSN-based health maintenance systems fully depends on development of specific sensors, data transmission, also on embedded systems improvements that take up modern role of our personal guards. Integration of WSN-based platform in homecare monitoring systems enables both reductions of costs for patient in the hospital and increasing the level of the health care in such a way that the critical states of patients just for hospitalization will be found out more quickly.

ACKNOWLEDGMENT

This work was supported in part by the Ministry of Education and Research under Grants PN2 81-060/2007 and PN2 11-040/2007

REFERENCES

[1] V. Srovnal, "Using of Embedded Systems in Biomedical Applications", *Proceeding 3rd European Medical and Biological Engineering Conference EMBEC'05 Prague*, IFMBE Proceedings, Volume 11(1), 2005

[2] J. A. Stankovic, Q. Cao, T. Doan, L. Fang, Z. He, R. Kiran, S. Lin, S. Son, R. Stoleru and A. Wood, "Wireless Sensor Networks for In-Home Healthcare: Potential and Challenges" *High Confidence Medical Device Software and Systems (HCMDSS) Workshop*, June 2-3 Philadelphia, 2005

[3] G. Shobha, R.R. Chittal, K. Kumar, "Medical Applications of Wireless Networks", *Second International Conference on Systems and Networks Communications*, p.82, 2007

[4] C. Falcon, "Wireless medical devices: Satisfying radio requirements", *Medical Device & Diagnostic Industry*, September, 2004, pp. 80-82.

[5] M. Penhaker, M. Černý and J. Floder, "Embedded Biotelemetry System for Home Care monitoring" *International Journal of Bioelectromagnetism*, Vol. 9, No. 1, 2007, pp. 35-36.

[6] C.S. Pattichis, E. Kyriacou, S. Voskarides, M.S. Pattichis, R. Istepanian and Cl.N. Schizas, "Wireless telemedicine systems - an overview", *IEEE Antennas Propag. Mag.*, vol. 44, pp. 143-153, apr. 2002.

[7] R. Dobrescu, M. Dobrescu, D. Popescu, H. G. Coanda, "Embedded Wireless Homecare Monitoring System", *International Conference on eHealth, Telemedicine, and Social Medicine, eTELEMED 2009*, Cancun, Mexico, Published by IEEE Computer Society, 1-7 February 2009, p. 66-71

[8] H. Zhou, K.M. Hou, L. Gineste and C. Vaulx, "A New System Dedicated to Real-time Cardiac Arrhythmias Tele-assistance and Monitoring", *Journal of Universal Computer Science*, vol 12, no.1, ianuarie 2006

[9] D. Popescu, R. Dobrescu, M. Nicolae, and C. Vasilescu, "Real Time Image and Data Acquisition, Processing and Communication Functions Implementation into a Mobile Sensor Node Configuration", *Proceedings of the 10th WSEAS International Conference on AUTOMATION & INFORMATION ICAI 09*, Prague, March 23-25, 2009, p. 396-401.

[10] D. Popescu, R. Dobrescu, M. Nicolae, and A. Iordan, "Communication Infrastructure Selection Criteria for Alerting Systems Implemented through Mobile Sensor Networks", *Proceedings of the 10th WSEAS International Conference on AUTOMATION & INFORMATION ICAI* 09, Prague, March 23-25, 2009, pp. 354-359.

[11] U. Anliker and col., "AMON: a wearable multiparameter medical monitoring and alert system", IEEE Transactions on Information Technology in Biomedicine, Vol.8, Issue 4, pp. 415-427, 2004.