Modeling and Simulation of Synchronizing System for Grid-Connected PV/Wind Hybrid Generation

M.I.M. RIDZUAN, M. IMRAN HAMID AND MAKBUL ANWARI
Department of Energy Conversion Engineering
Faculty of Electrical Engineering
Universiti Teknologi Malaysia
81310 UTM Skudai, Johor
MALAYSIA
makbul@fke.utm.my

Abstract: - This paper presents modeling and simulation of wind energy and solar hybrid generation system for grid connected system. The proposed system consists of buck converter, pulse width modulation inverter, synchronizing system. The synchronizing system operation is to verify whether the output of the PWM inverter is same as the grid system. The synchronizing system consists of voltage, frequency and phase comparator. Modeling and simulation of the entire system is carried out using PSPICE.

Key-Words: - Hybrid PV/Wind, Synchronizing system, Grid connected system.

1 Introduction

Today energy sources, oil, coal, and natural gas, are running out, can tomorrow's energy come from wind and solar? Some think so, but others believe that the atmosphere is too vast and that we cannot harness wind power on a major scale. Wind, blowing constantly in swift currents around the world, offers enormous energy potential. In spite of man's ability to create mighty instruments, he has not been able to harness totally this awesome power of nature. The wind remains beyond a desirable level of control in spite of all our technological advances [2].

In using solar energy as renewable energy, solar cells offer a potentially attractive means for the direct conversion of sunlight into electricity with high reliability and low maintenance, as compare with solar-thermal systems. The present disadvantage is high cost to build it and the difficulty of storing large amounts of electricity for later use. The cost of solar cells is expected to be considerably reduced when cell are manufactured in large quantities using new production techniques for obtaining ribbons or sheets of single crystal silicon [3].

For a single generation such as photovoltaic generation, it is weak to provide energy or power to the grid system. By using both of the generation, wind and solar hybrid system is much better than single wind or photovoltaic generation since it's suppresses rapid changes in the output power [4].

In the solar and wind power system connected to the grid the proposed system consists of wind blade, DC/DC converter, PV array and DC/AC inverter [4]. In order to connect to the line grid, there are certain satisfaction must be checked before do the connection [6]. The terms that need to be satisfied are the voltage, phase and frequency. The output voltage of the PWM inverter must same with the line grid in order power to deliver.

The objective of this project is to model synchronizing circuit for PV and wind hybrid generation connected to grid. In this project, there are certain assumption has been made. The voltage feed into the Buck converter is always constant although practically the voltage from the solar panel is variable with the intensity of the sun and wind turbine is depends on the kinetic energy of the wind. From that, it cannot show the different between the inconstant voltage sources and constant voltage sources to the input of the Buck converter.

2 Modeling and Simulation Circuits

The proposed system consists of buck converter, pulse width modulation inverter and synchronizing circuit, as shown in the Fig. 1. Wind energy converter dc electrical power in the wind generation itself. The buck converter operation is to regulate and maintain the voltage at certain level. The PV array generates dc power. Both wind and PV power feed to buck converter and the output of buck is insert to the inverter. At the end inverter, the synchronizing circuit is used to verify the voltage, frequency and phase of the voltage [6].

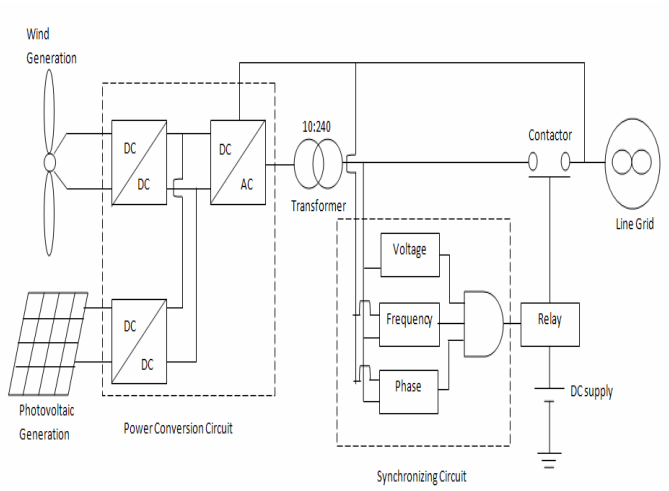

Fig. 1. Wind/PV hybrid system.

2.1 Buck Converter with Hysteresis Controller

DC-Dc converters are used to convert the unregulated dc input into a controlled dc output at a desired voltage level. A buck converter is a step down DC to DC converter because the output voltage is less than input voltage. This converter controls the output to the specifications by comparing positive output voltage to an internal reference [1]. Feedback input is necessary to know positive of the output voltage.

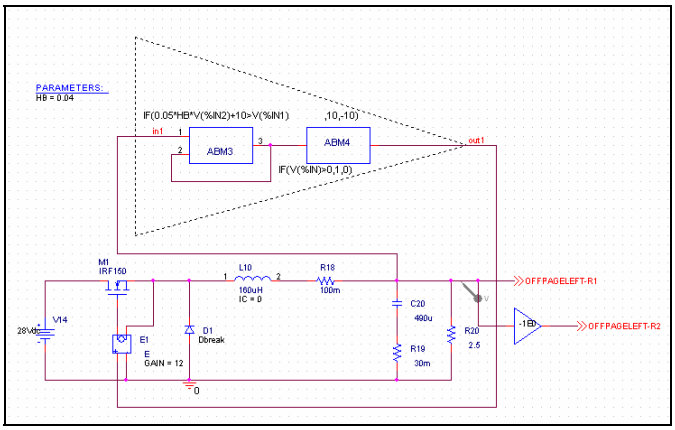

Fig. 2. Simulation circuit of Buck converter

A buck converter operates in continuous mode if the current through the inductor (I_L) never falls to zero during the commutation cycle [1]. Hysteresis comparator will change duty cycle of the signal depend of the input in order to maintain the output voltage of buck converter for certain value.

2.2 Three-Phase PWM Inverter

Inverters are circuits that convert dc to ac. To be more precisely, inverters transfer power from a dc source to an ac load. In PMW inverter, a control signal $v_{control}$ was compared with a repetitive switching-frequency triangular waveform in order to generate the switching signal.

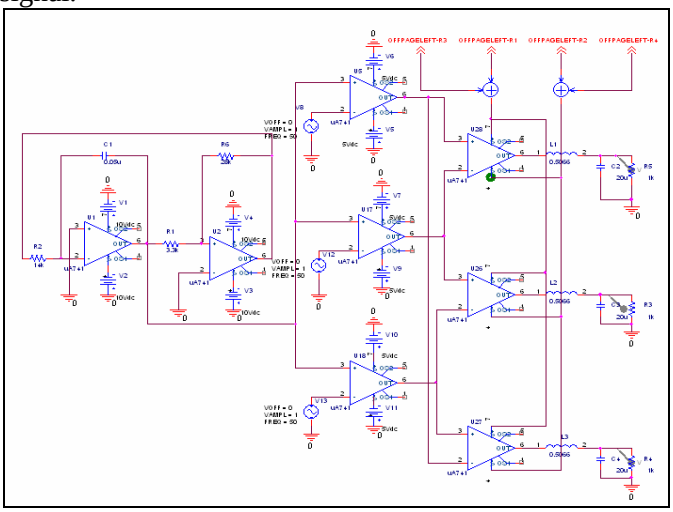

Fig. 3. Simulation Circuit for PWM Inverter.

In this circuit, the desired frequency output frequency is 50 Hz which is also called as modulating frequency. To obtain balanced three-phase output voltage in a three-phase PWM inverter, the same triangular voltage waveforms compared with three sinusoidal control voltages that are 120° out of phase [1]. The carrier frequency in this circuit is about 2 kHz. The amplitude for the modulating wave is 1.0 volt while the amplitude of carrier signal is 1.4 volt.

PWM is not just only control the frequency, but also control the inverter output sinusoidal in term of magnitude. The $v_{control}$ in PWM is the amplitude voltage of the desired frequency. In the PWM, the T_{A+} and T_{A-} are controlled based on the comparison of $v_{control}$ and v_{tri} (amplitude of triangle signal) and the following output voltage results, independent of the direction of i_a [1].

$$v_{control} > v_{tri}, \quad T_{A+} \text{ is on}, \quad v_{Ao} = \frac{1}{2} V_d \tag{1}$$

$$v_{control} < v_{tri}, \quad T_{A-} \text{ is on}, \quad v_{Ao} = -\frac{1}{2} V_d \tag{2}$$

2.3 Voltage Comparator

The voltage comparator is inspired by using the comparator itself. The variable input voltage level is compared with a reference voltage level. The output of the PWM inverter per phase is about 240 volt AC. By using the single phase rectifier circuit, the output voltage is ripple DC voltage. Therefore, a large capacitor is connected as a filter on the dc side in order to reduce the ripple.

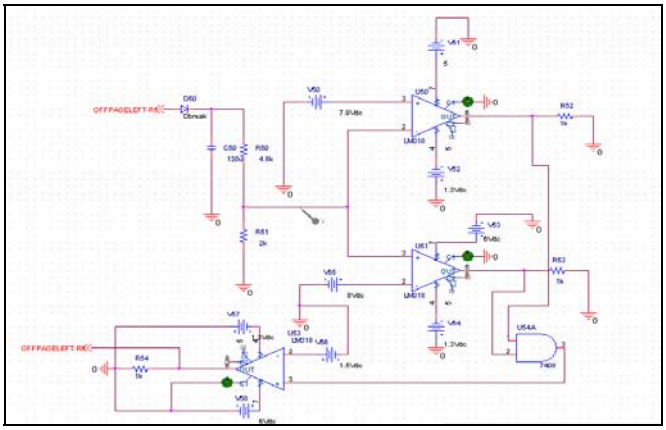

Fig. 4. Simulation circuit of Voltage Comparator

At the output of the capacitor, the voltage is direct current with small ripple. By using two resistors, the voltage is divided by using voltage divider and Kirchhoff Voltage Law. The R2 voltage is fluctuate about 7.92 to 7.98 VDC. In this circuit, there is upper and lower voltage level or as known as reference. The upper voltage is 8.0 volt while the lower voltage is 7.9 volt. As long as the input voltage is in the upper and lower voltage reference, the output of the comparator is almost 5 VDC. If the input voltage is higher than the upper voltage reference or small than lower voltage reference, the output of the voltage comparator is slightly at 0 volt.

2.4 Phase Comparator

The phase comparator design is based on the logic gate Exclusive-OR. By using the characteristic of the Exclusive-OR gate, the difference between the phases can be realized.

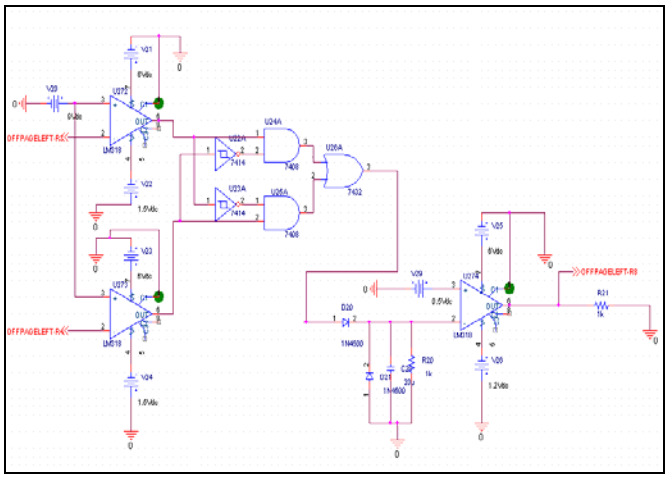

Fig. 5. Simulation circuit of Phase Comparator

TABLE 1

TRUTH TABLE OF EXCLUSIVE-OR LOGIC GATE [5].

Inputs		Output
A	B	X
0	0	0
0	1	1
1	0	1
1	1	0

Firstly, the one phase output of the inverter, which is sinusoidal wave, will be transform in pulse wave by using comparator. Thus, one phase of the line grid also is change in to pulse wave. With two pulse wave from the inverter and the line grid, the phase between them can be differentiating. If there is no phase different, the output voltage is almost 5 volt. But, if there is a phase different between the two pulse waves, the output of the compactor is 0 volt.

2.5 Phase Comparator

For the frequency comparator, it has the same topology as the phase comparator. The only different is that the Exclusive-OR gate must be simulate in its fundamental diagram which have AND, OR and NOT gate [5].

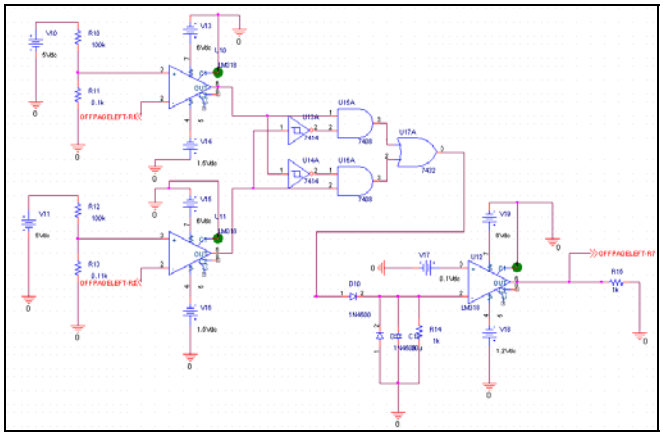

Fig. 6. Simulation circuit for Frequency Comparator.

The output of inverter is then compared with 50 hertz frequency reference. If the frequency of the inverter is about 50 hertz, the output of frequency comparator is 5 volt, and if the frequency for higher or lower than 50 hertz, the output is about 0 volt.

3 Results and Discussion

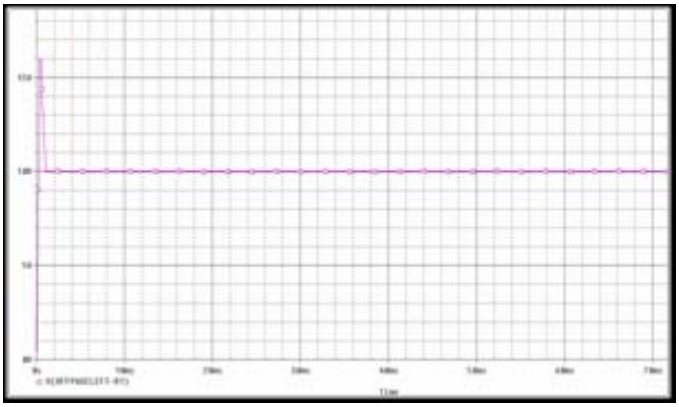

Fig. 7. Output Voltage of Buck converter for Wind Generation

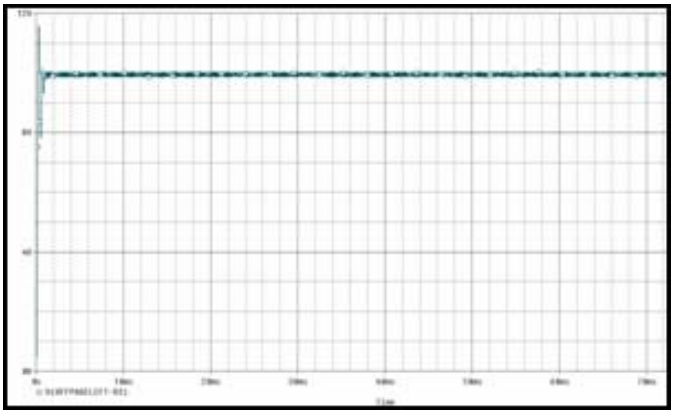

Fig. 8. Output Voltage of Buck Converter for Photovoltaic Generation

From the result of buck converter for wind generation and photovoltaic generation, both of the output is 10 volt. The simulation result show that the output voltage of buck converter is fluctuated before it is regulated at 20 volt. The duration for the time of operation to regulate is about 1 millisecond. The switching frequency for the buck converter is 10 kHz.

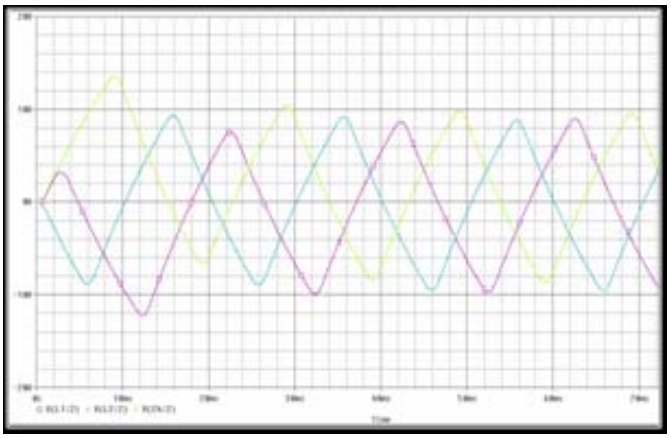

Fig. 9. Alternating voltage from the PWM Inverter

The output of the inverter shows the 3 phase alternating voltage with amplitude of 8.93 volt. From the PWM inverter simulation, the output voltages take time about almost 40ms to get the 120° phase difference between 2 phase voltages. This may due to the time for the buck converter to regulated at 10 volt and it is affected the time process for the PWM inverter.

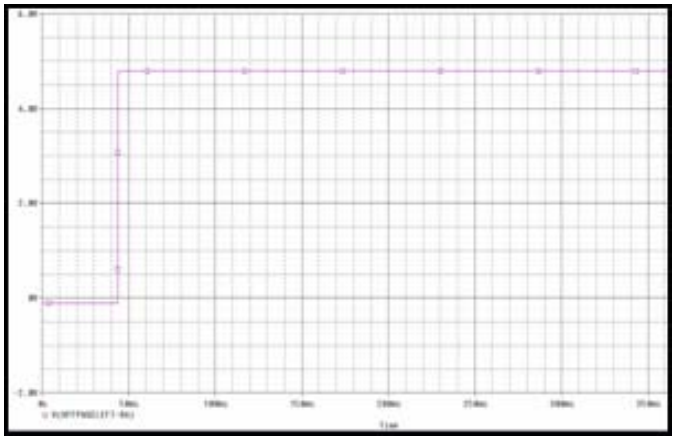

Fig. 10. Output voltage of Voltage comparator

The synchronizing circuit consists of voltage, frequency and phase comparator per phase. It means that for 3 phase voltage need 3 synchronizing circuit. From the simulation of frequency comparator, after feeding the 1 phase voltage of PWM inverter with 40ms delay with the frequency of 50 Hz, the output of simulation takes about 93.7 millisecond to becomes high (5 volt). If the frequency of per phase is higher of lower than 50 Hz, the output voltage from frequency comparator is low (0 volt). From the simulation result of frequency comparator, the comparators have the accuracy of 100 % to differentiate between allowable frequency or not.

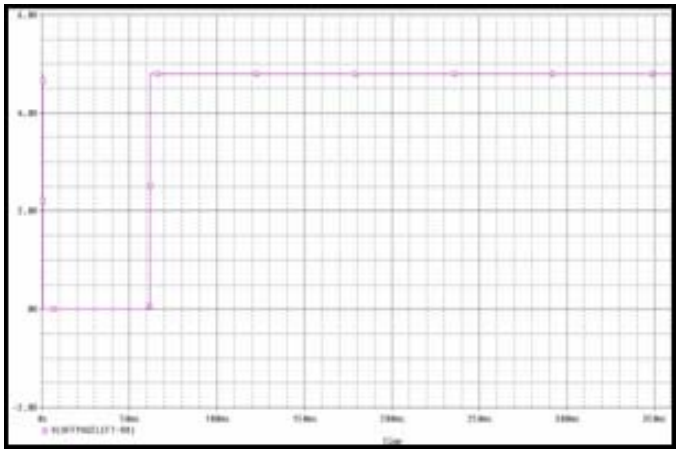

Fig. 11. Output voltages of Phase Comprator

From the phase comparator simulation output, the voltage is high if the per phase of inverter is same with per phase of line grid. After the delay of 40 millisecond of output inverter, the result of phase comparator shows that the output voltage becomes high (5 volt) after 42

millisecond. It means that the comparator it's self only take 2 milliseconds delay to operate.

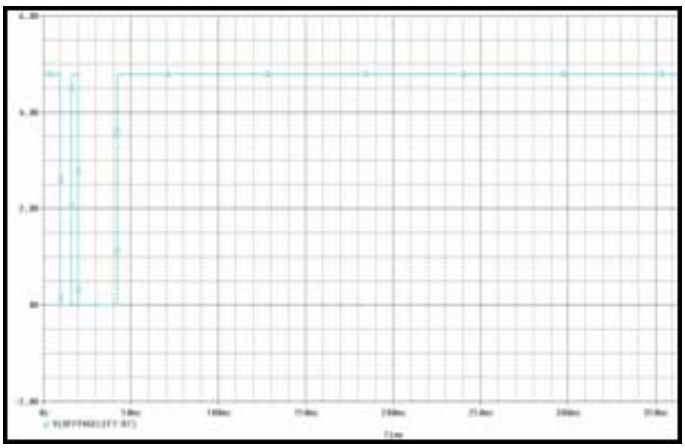

Fig. 12. Output voltages of Frequency comparator

For the voltage comparator circuit, the simulation shows that the comparator takes about 76 millisecond to becomes high (5 volt) after being feed with 40 millisecond delay of PWM inverter output. From this, it shows that the voltage comparator only takes time about 36 milliseconds in order to complete the process. The efficiency of the voltage comparator can be varies by adjust the lower and upper voltage in the voltage comparator circuit.

4 Conclusion

In the simulation, there are two parts of circuit, first is power conversion circuit, and second is synchronizing circuit. The power conversion circuit consists of Buck converter and inverter while the synchronizing circuit consists of voltage, frequency and phase comparator. The power conversion circuit and synchronizing circuit is not together connected in the simulation. In the simulation of synchronizing circuit, an alternating voltage source is represents as an output voltage of the power conversion circuit.

The Buck converter output for Wind Generation produces higher overshoot than the output voltage of Buck converter of Photovoltaic Generation. This may due to the higher inductive size of the Buck converter of the Wind Generation. To overcome this problem, the inductance size needs to be reduced at least to 90 μH in order to have a continuous mode current.

The synchronizing circuit is build for one phase only. For the voltage comparator, as long as the voltage input is in the between of upper and lower level of voltage reference, the output is high. The frequency comparators have high accuracy to differ whether the frequency is the same or not. In order to deliver the power, the phase between two voltages must be same. That is why the phase comparator is important in this circuit.

References:

[1] Daniel W. Hart, *Introduction To Power Electronic*, Prentice-Hall International.

[2] John Twildell, and Tony Weir, *Renewable Energy Resources*, Second Edition, Taylor & Francis, 2006

[3] Martin Kaltschmitt, Wolfgang Streicher, and Andreas Wiese, *Renewable Energy*, Springer-Verlag Berlin Heidelberg, 2007.

[4] Seul-Ki Kim, Eung-Sang Kim, and Jong-Bo Ahn, *Modeling and Control of a Grid-connected Wind/PV Hybrid Generation System*, IEEE PES Transmission and Distribution Conference and Exhibition, 2006

[5] ThomasL. Floyd, *Digital Fundamentals*, Ninth Edition, Pearson Education International, 2006.

[6] P. C. Sen, *Principles of Electrical Machines and Power Electronics*, Second Edition, John Wiley & Sons, 1997.