Case Studies of the Impact of Voltage Imbalance on Power Distribution Systems and Equipment

TSAI-HSIANG CHEN[a] CHWNG-HAN YANG TING-YEN HSIEH[b]
Department of Electrical Engineering
National Taiwan University of Science and Technology
43, Keelung Road, Section 4, Taipei (10607)
TAIWAN
[a] thchen@mail.ntust.edu.tw [b] D9607103@mail.ntust.edu.tw

Abstract: - This paper investigates the impact of voltage imbalance on power distribution systems and equipment in various practical cases. The definition of voltage imbalance is introduced first, followed by description of the origins of voltage imbalance, and finally simulation results and discussion of the impact of voltage imbalance on systems and equipment for specific cases are presented. A commercial software package, Matlab/Simulink® was utilized to build full-scale mathematical models of power distribution systems. The simulation results of the study cases have indicated clearly, the causes and impacts of voltage imbalance. The results are of value to engineers and experts in designing suitable power distribution systems, balancing single-phase loads in three phase systems and thereby improving system efficiency.

Key-Words: voltage unbalance, power distribution system, system efficiency, neutral wire.

1 Introduction

Generally, three phase balance is the ideal situation to achieve for a power system. However, single-phase loads, single-phase distributed resources (DRs), asymmetrical three-phase equipment and devices (such as three-phase transformers with open wye-open delta connections), unbalanced faults, bad connections to electrical connectors and many other factors cause power system imbalances and reduce power quality [1-7]. The three phase voltages of a balanced three-phase power system should have the same magnitude and be in 120° phase displacement. Voltage unbalance is one of the most serious power quality problems.

The factors resulting in voltage imbalances can be simply separated into two categories: normal factors and abnormal factors. Voltage imbalances due to normal factors, such as single-phase loads and three-phase transformer banks with open wye-open delta connections, can generally be reduced by properly designing the system and installing suitable equipment and devices. Abnormal factors include series and shunt faults of circuits, bad electrical contacts of connectors or switches, asymmetrical breakdown of equipment or components, asynchronous burnout of three phase power fuses, single-phase operation of motors, etc.[1-4]. The abnormal factors just mentioned above might result in critical damage of systems and equipment.

To clarify the discussion in this paper, the definition of voltage imbalance is introduced in section 2. The effects of voltage imbalance are explained in section 3. All study case simulations and results are discussed in Section 4. A commercial software package, Matlab/Simulink was utilized to perform the simulations. Some feasible methods are also proposed in section 4 to fix abnormal factors that cause the system voltage imbalances. Finally a brief conclusion is drawn.

2 Definition of Voltage Unbalance

If three phase voltages have the same magnitude and are in exactly 120° phase displacement, then the three-phase voltage is called balanced, otherwise, it is unbalanced. There are no negative- and zero-sequence voltages in a balanced system, only positive-sequence components of balanced three-phase voltage exist. On the contrary, if the system is unbalanced, negative-sequence components or zero-sequence components or both may exist in the system. The balanced and unbalanced voltages can be mathematically represented as follows.

(a) balanced three-phase voltage:

$$\begin{cases} V^a = |V|\angle\theta_V \\ V^b = |V|\angle(\theta_V - 120°) \\ V^c = |V|\angle(\theta_V + 120°) \end{cases} \tag{1}$$

(b) unbalanced three-phase voltage:

$$\begin{cases} V^a = \left|V^a\right| \angle \theta_V^a \\ V^b = \left|V^b\right| \angle \theta_V^b \\ V^c = \left|V^c\right| \angle \theta_V^c \end{cases} \tag{2}$$

where

$$\left|V^a\right| \neq \left|V^b\right| \neq \left|V^c\right|$$

$$\angle \theta_V^a \neq \angle\left(\theta_V^b + 120^\circ\right) \neq \angle\left(\theta_V^c - 120^\circ\right)$$

The definitions of balanced and unbalanced three-phase currents are analogs to those of balanced and unbalanced three-phase voltage.

3 Effects of Voltage Imbalance on Systems and Equipment

The effects of extensive voltage imbalances on power systems and equipment are broad and serious. A severe imbalance might dramatically decrease the equipment life cycles, considerably speed up the replacement cycle of equipment, and significantly increase system operation and maintenance costs. Moreover, for a three-phase four-wire (3ϕ4W) system, voltage imbalance may cause higher neutral wire current and lead to relay misfunction[1-6]. The major effects of voltage imbalance are described as follows.

3.1 Extra power loss

It is known that voltage imbalance always causes extra power loss in the system. The higher the voltage unbalance ratio (VUR) is, the more power is dissipated. That means higher power bills.

3.2 Safety deficiency

The voltage difference between the highest and the lowest voltages among the three phase voltages of an unbalanced three-phase voltage is the main factor that instigates safety deficiencies. The degree of safety deficit mainly depends on the affected equipment itself.

3.3 Motor failure

In general, a three-phase motor fed by a balanced three-phase voltage with only positive-sequence component produces only positive-sequence torque. Extra loss due to voltage imbalance will heat the motor windings, lead to breakdown of winding insulation and might finally result in motor failure. The negative-sequence voltage caused by voltage imbalance produces opposite torque and leads to motor vibration and noise. Severe voltage imbalance may even result in motor collapse.

3.4 Life cycle decrease

High temperatures, exceeding the rated value of a device, will considerably decrease the life cycle of the device and speed up the replacement cycle for the device, and significantly increase the costs of operation and maintenance.

3.5 Relay misfunction

The high zero-sequence current in consequence of voltage imbalance may bring about misfunctions of relay operation or make the ground relay less sensitive. That may result in serious safety problems in the system.

3.6 Inaccurate Measurement

Negative and zero-sequence components of voltages or currents will give rise to inaccurate measurements from many kinds of meters. The imprecise measured values might affect the suitability of settings and coordination of relay protection systems and the correctness of decisions by some automated functions of the system.

3.7 Transformer failure

Three-phase voltage with high VUR may cause the flux inside the transformer core to be asymmetrical. This asymmetrical flux will cause extra core loss, raise the winding temperature and may even cause transformer failure in a severe case.

A commercial software package, Matlab/Simulink is utilized to build full-scale mathematical network models and to simulate the effects of voltage imbalance for various practical study cases.

4 Case Studies

Section 3 has described that voltage imbalances will create extra power loss, reduce system efficiency, decrease motor life cycles, etc. Besides, some abnormal operation and maintenance conditions may also lead to voltage imbalance and result in negative effects on systems and equipment. These conditions include such problems as bad electrical contacts, unsuitable shunt capacitor bank installation, single-phase operation of a motor, etc. These kinds of operation and maintenance conditions may not occur frequently. However, if they do occur they will bring about very serious problems for systems or equipment. Several practical cases will be used to deal with these types of problems in this section. The simulation results with problem defined and improvement measures are presented as follows.

4.1 Bad connection of neutral wire

Fig. 1 illustrates the power supply system of a small factory in a three-floor building. Each floor of this three-floor building is serviced by a single-phase feeder with a different phase. That is, the first, second and third floor are serviced by phase *a*, *b* and *c*, respectively. The supply transformer is rated at 150 kVA and connected delta-grounded wye to provide for 380/220 V three-phase four-wire grounded-wye service. The transformer delivers a load of 35 kVA at 220 V with 0.9 power factor lagging to each floor.

During the daytime on weekdays, most of the workers are distributed equally over the three floors to do their work. About one third of the workers will work at night on the first floor. The power of the first floor is supplied only by phase *A* from the supply transformer.

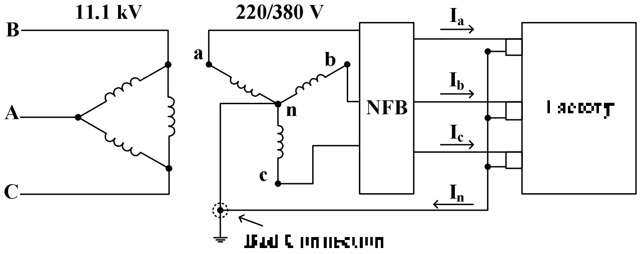

Fig. 1 Power supply system for a three-floor building housing a small factory

During the daytime on weekdays, the power distribution system of the factory shown in Fig. 1 works normally, however it is not the case at night. The fluorescent lamps flash frequently during the nighttime. Two reasons for this kind of flash were found by computer simulation using detailed three-phase elements and network models. One was an unsuitable phase arrangement of single-phase loads for the entire building, and the other was a bad electrical contact of the neutral wire of the supply transformer to the grounding rod. Because the transformer neutral wire was not connected firmly, the contact resistance between the neutral wire and connector was 15 kΩ. This is unacceptable according to general electrical codes.

About one third of the workers worked at night, all on the first floor. The power for the first floor was supplied only by phase *A* from the transformer. This kind of service and load arrangement together made the system severely unbalanced. Besides, the more serious problem was the bad connection of the transformer neutral wire. The bad electrical contact produced an extremely high impedance of 15 kΩ. This extra high impedance caused an unusually high voltage drop in the phase *a* circuit. In this case, the voltage of phase *a* dropped from the normal 220V to 182.5V, about 17% based on the nominal voltage. If the contact impedance goes higher than 20 kΩ, it may result in more serious conditions such as extinguishing all lamps. This problem can be removed by fixing the bad connection and keeping the contact impedance near to zero. Suitably arranging the single-phase loads on the three floors during daytime and nighttime is also necessary for better system balance. Simulation results are presented in Table 1.

Table 1. Comparisons of voltage profiles before and after the bad connection is fixed

Neutral wire contact impedance	Voltage across the bad connection point (V)		Transformer secondary -side voltage (V)	
	Daytime	Nighttime	Daytime	Nighttime
15 kΩ	≈ 0	40.89	220.00	182.50
0 Ω	0.00	0.00	220.00	220.00

Note: 1. All voltages shown are in phase *a*.
2. Phases b and c are all near 220 V for both cases.

4.2 Neutral wire broken

This case deals with the effect of a broken neutral wire on the voltage imbalance in a 3ϕ4W system. For a 3ϕ4W system, high neutral wire impedance might enlarge a voltage imbalance, damage the equipment connected and even destroy all equipment in a severe case [5]. The schematic diagram for this case is shown in Fig. 2. The wye-connected lighting loads are fed by a 220 V balanced three-phase voltage source. The fluorescent lamps are all rated at 220 V, 100 W each. The lamps are not equally distributed to the three phases. And, the normal impedance of the neutral wire is 1 Ω.

For a system with an unbalanced three phase load arrangement, high neutral wire impedance will enlarge the voltage across the neutral wire, as shown in Table 2. The simulation result shows that the voltages of phases *B* and *C* at the load terminal raised to 255.53 V and 232.7 V, respectively, and gaining 16.15% and 5.77% based on rated voltage, respectively. These abnormally high phase voltages might damage the lamps in phase *B* and *C*, or hasten their replacement rates. On the other hand, the voltage in phase *A* was reduced from 220V to 178.3 V. That might cause the lamps to flash. If the broken neutral line is fixed, then the three phase voltages will go back to normal in near balanced status as shown in Table 3. Moreover, if the loads are distributed equally to the three phases this problem can also be removed or minimized.

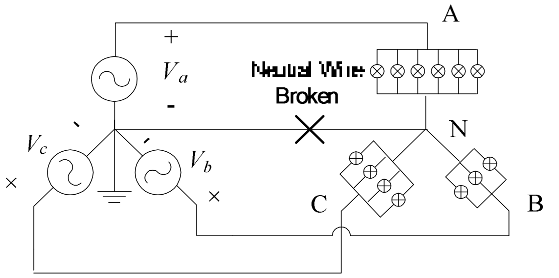

Fig. 2 Schematic diagram of a 3ϕ4W system with broken neutral wire

Table 2. Voltages across the neutral wire under normal and broken conditions

Voltage across the neutral wire (V)	
Normal	1.171∠19.100°
Neutral wire broken	44.770∠19.108°

Table 3. Voltage profiles for the neutral wire, normally and when broken

Conditions of neutral wire	Voltage at the load terminal		
	V_{AN} (V)	V_{BN} (V)	V_{CN} (V)
Normal	218.89∠-0.1°	220.89∠-120.2°	220.20∠120.3°
Broken	178.29∠-4.7°	255.53∠-126.6°	232.70∠130.9°

4.3 Unsuitable capacitor bank installation

For reducing preventable energy loss, utilities always require their customers to maintain the power factor within a narrow range, for example, 0.95 leading to 0.9 lagging. Penalties will apply to the electric fees of customers if their loads' power factors run outside the limits. Installation of shunt capacitor banks is the most common and cheapest manner to improve the power factor. However, unsuitable installation may make it worse.

This case is used to indicate the problem of unsuitable installation of a shunt capacitor bank. The schematic diagram for this case study is shown in Fig. 3. The supply transformer is rated at 150 kVA, 11.4 kV-380/220 V, and supplies a three-phase load of 105 kVA with power factor 0.7 lagging. The shunt capacitor bank to correct the poor power factor is rated at 20 kvar. The impedance of the shunt capacitor bank is 1.805 Ω per phase.

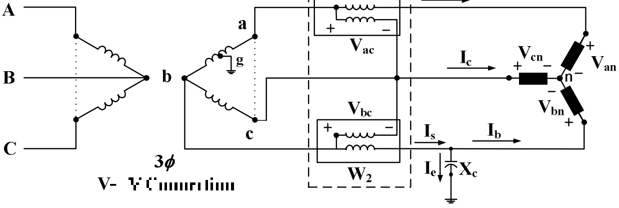

Fig. 3 Schematic diagram for the case study of unsuitable capacitor bank installation

A single-phase capacitor bank is connected to phase *b* to improve system power factor as shown in Fig. 3. This kind of installation should make the system unbalanced. This unsuitable installation consumes extra real power of 34,422.57 W. That can be obtained by hand calculation as shown in (3). The suitable way to improve the system power factor for this case is to install a three-phase capacitor bank instead of a single-phase capacitor bank. The reason can be found in Table 4. This case indicates that the system balance should be considered when installing a capacitor bank to correct the system power factor for a three-phase power distribution system.

$$\frac{\sqrt{3}\times V_{ab}^2}{4X_c}=\frac{\sqrt{3}\times 378.818^2}{4\times 1.805}=34,426\ (\mathrm{W}) \tag{3}$$

Table 4. Electric fees for power factor correction by suitable and unsuitable shunt capacitor bank

Installation	Total power consumption (W)	Electric fee (NT $ / h)	Power factor
Before correction	73,306	130.130	0.7
Single-phase capacitor bank	107,724	185.660	0.8
Three-phase capacitor bank	73,256	126.260	0.8

Note:
1. Electric fee = 1.7235 NT $/kWh.(NT $ means New Taiwan dollar)
2. Penalty is included in the electric fee, 3‰ for every 0.01 for power factor below 0.8.

4.4 Operation of three-phase motor under voltage imbalance

The impacts of voltage imbalance on a delta-connected three-phase motor are explored in this case. A schematic diagram for this case study is shown in Fig.4. It is known that voltage imbalance not only decreases motor efficiency but also reduces its life cycle and therefore significantly increases a motor's operation and maintenance costs [1, 3-4].

High VUR may make a motor operate inefficiency and fail frequently. In a practical case, the motors in a factory fail recurrently. To find the reasons, some field tests and measurements were performed. The measurements included system voltages, currents, and powers for each phase. The measurement results show that the three phase loadings are considerably unbalanced. Sometimes, active loads are all in the same phase. That makes the system significantly unbalanced.

The unequal loadings lead to a terminal voltage and a current imbalance of an unacceptable level as shown in Table 5. It is found that the voltage imbalance ratio reaches 3.16% and results in the winding temperature rising by 16.7% ~ 19.8% compared to that of a normal balanced case, as shown in Fig. 5. The temperature rises shown in Fig. 5 are obtained by hand calculation according to empirical rules that are commonly used by industry [2].

In Fig. 5, the d_2% denotes one kind of VUR and is defined as the ratio of negative-sequence component and positive-sequence component of the three-phase voltage under study. High VUR will overheat the motor windings, weaken the insulation, and reduce the motor life cycle, as shown in Fig.6 [7]. This case confirms that a good phase loading arrangement and system balance is very important for operating a three-phase motor efficiently.

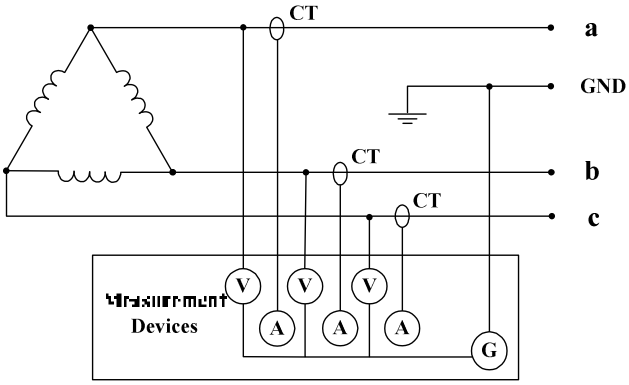

Fig. 4 Schematic diagram for measure voltage imbalance of a three phase motor

Table 5. Voltage and current profiles at the terminal of a three-phase motor operated under unbalanced conditions

V_a(V)	V_b(V)	V_c(V)	I_a(V)	I_b(V)	I_c(V)
276.7	266.8	261.7	643	750	651
θ_{a-b}	θ_{b-c}	θ_{c-a}	θ_{a-b}	θ_{b-c}	θ_{c-a}
122	117	121	122	117	121

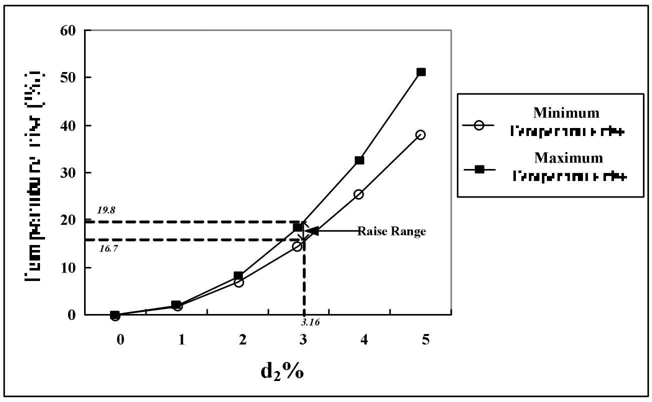

Fig. 5 Winding temperature rise due to voltage imbalance

5 Conclusion

Several cases have been used to confirm the impacts of voltage imbalance on systems and equipment. Voltage imbalance not only causes extra energy loss, but also causes safety problems for a system. To prevent voltage imbalance, the balance problem should be taken into account through all the planning, design, installation and operation stages. This paper displays some cases, with theoretical analysis and explanation, to make it easy to grasp the impacts of voltage imbalance on systems and equipment. The results are of value to engineers for better design, operation and maintenance of power distribution systems.

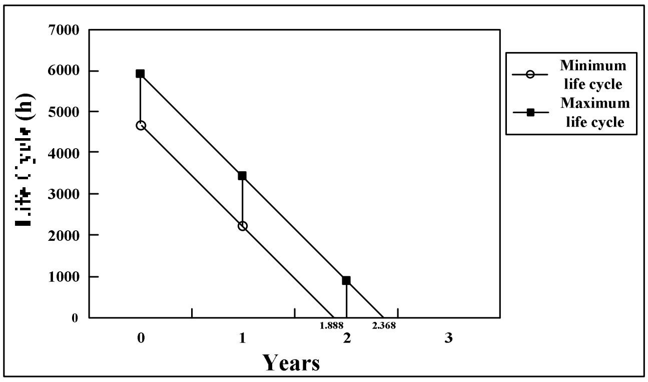

Fig. 6 Motor life cycle reduction under VUR of 3.163%

References:

[1] Jawad Faiz, H. Ebrahimpour and P. Pillay, Influence of unbalanced voltage supply on efficiency of three phase squirrel cage induction motor and economic analysis, *Elsevier Energy Conversion and Management,* Vol. 47, No. 3, 2006, pp. 289-302.

[2] Cooper Bussmann, *Motor Protection Voltage Unbalance and Single-Phasing*, Progress Energy, 2003.

[3] L. Refoufi, H. Bentarzi and F. Z. Dekhandji, Voltage Unbalance Effects on Induction Motor Performance, *WSEAS*, 2006, pp. 112 - 117.

[4] Siddique A, Yadava G.S., Singh B, Effects of voltage unbalance on induction motors, *IEEE International Symposium on Electrical Insulation*, 2004, pp. 26 - 29.

[5] Desmet, J., Sweertvaegher, I., Vanalme, G., Stockman, K., Belmans, R, Analysis of the neutral conductor current in a three phase supplied network with nonlinear single phase loads, *IEEE Transactions on Industry Applications*, Vol. 39, No. 3, 2003, pp. 448 – 453.

[6] Horton R, Warren T, Fender K, Harry S, Gross C.A, Unbalance protection of fuseless, split-wye, grounded, shunt capacitor banks, *IEEE Transactions on Power Delivery*, Vol. 17, No. 3, 2002, pp. 698 – 701.

[7] R. F. Woll, Comparison of Application Capabilities of U and T Rated Motors, *IEEE Transactions on Industry Applications,* Vol. IA-11, No. 1, 1975, pp. 34-37.