VARIABLE STRUCTURE CONTROL AND TIME-DELAY SYSTEMS

VARIABLE STRUCTURE CONTROL AND TIME-DELAY SYSTEMS

Prof. ELBROUS M. JAFAROV

Electrical and Computer Engineering Series
A Series of Reference Books and Textbooks

ISBN: 978-960-474-050-5
ISSN: 1790-5117

Published by WSEAS Press
www.wseas.org

ELBROUS M. JAFAROV

Member of WSEAS

VARIABLE STRUCTURE CONTROL

AND TIME-DELAY SYSTEMS

EDITOR: PROF. NIKOS MASTORAKIS

Published by WSEAS Press
www.wseas.org

Electrical and Computer Engineering Series
A series of Reference Books and Textbooks

Published by WSEAS Press
www.wseas.org

ISBN: 978-960-474-050-5
ISSN: 1790-5117

Elbrous M. Jafarov was born in province Gokche, village Karkibash in west of Azerbaijan in 1946. He received his first class Honors Electro-Mechanical Eng. Diploma (M.Sc. Degree) in Automation of Manufacturing Process from Azerbaijan Industrial University, Baku, Azerbaijan in 1969. The USSR State Certification of Candidate Eng. Sc. (Ph.D.) and D.Sc. (Eng) degrees from Research Institute NIPINefteKhimAutomat (Sumgait) – TsNIIKAutomation (Moscow) - IMM and Institute of Cybernetics of Azerbaijan Science Academy and Institute of Control Sciences (Moscow)-MIEM-LETI in Control Engineering were received in 1973 and 1982, respectively.

He started as a research engineer in NIPINefteKhimAutomat and then he became Head of Variable Structure Control of Oil-Chemical Process Laboratory from 1969 to 1984. During 1985-1996 he was Chairman of the Control Systems and Robotics Engineering Department at the Azerbaijan Technical University, Baku. Dr. Jafarov received the USSR State Certification of Professor in Control System Engineering in 1987. He was visiting Professor at Beijing Aeronautical and Astronautical University (BUAA), China, 1993. He has been contractual professor in the Aeronautical and Astronautical Engineering Faculty of Istanbul Technical University, Turkey, since 1996. He is senior student of University of Allah, Virginia USA.

Professor Jafarov is the author of about 200 scientific journal articles, international conference papers, and 27 USSR inventions in Control Engineering. He is a member of IASTED (Canada), WSEAS (Greece), Int. Tech. Cybernetics Academy (Saint Petersburg), Literature Club (London) etc. His current research interests include variable structure control, time-delay systems, flight control, robust control etc. He also is interested in relativity theory, poetry and Sufism.

Published by WSEAS Press
www.wseas.org
ISBN: 978-960-474-050-5
ISSN: 1790-5117

Preface

A key issue in the analysis and design of feedback control systems is the stability and robustness of the resulting closed-loop system. That is the problem of controlling uncertain linear and nonlinear systems without or with time-delay subject to external disturbances is a basic topic which is considerable interest of control researches and engineers. One approach to this problem is by means variable structure control.

A. Variable Structure Control

Now, the sliding mode control approach recognized as an efficient tool to design of robust controllers for complex, nonlinear and high order linear plants and time-delay systems with parameter perturbations and external disturbances. Variable structure control systems are characterized by a suit of feedback control algorithms and a decision rule. The decision rule, termed the switching function, has its input the measurable state variables and produces as an output the particular feedback linear or nonlinear controller that should be used at that instant in time. In other words, a variable structure system consists of a set of linear or in general nonlinear subsystems with a proper switching function logic. Such systems also may colled multi-structure systems. The resulting control action is a discontinuous function of the system states, reference model errors, disturbances and etc. Briefly, variable structure system is characterized by discontinuous control action which changes structure upon reaching a set of switching surfaces. Well known relay or on-off or bang-bang regulator is simple discontinuous controller which is widespread because of its easy implementation and efficiency of control hardware. The basic design concept for the majority of variable structure systems rests upon enforcing sliding modes. The well known sliding mode control methodology is a particular type of variable structure systems.

Sliding mode is a principle operational mode in variable structure control. Practically all design methods for variable structure systems are based on the deliberate introduction of sliding modes which have played an exceptional role both in design and in practical applications. In sliding mode control, variable structure controller is designed to drive and then constrain the system state to lie with in a neighborhood of the switching function. Therefore, the sliding surface is reached in finite time and then on sliding manifold is generated an asymptotically stable sliding motion. There are a number of advantages of sliding mode control approach: robustness or low sensitivity to plant parameter variations, external disturbances, model uncertainties, etc, which eliminates the necessity of exact modeling; easy implementation; system order reduction property; the possibility of stabilizing some non-linear systems which are not stabilizable by continuous state feedback lows; etc. Sliding mode control enables the decoupling of the overall system motion into independent partial components of lower dimension and as a result, reduces the complexity of feedback control design. Sliding mode design principles are based on two stage procedures: 1) hitting or reaching phase and the 2) sliding phase. Both of them are concerned with stability or attractivity concepts. The first considers the design of the desired dynamics for a system (n-m)-order by proper choice of a sliding manifold s(t)=0. The second consists of designing a controller which will ensure the sliding mode, and thus, the desired performance is attained and maintained. Sliding mode control implies that control actions are discontinuous state or output function which may easily be implemented by convential elements of automation, for example on-off or relay elements, power converters, pneumatic modules, etc. Finally, analysis of the discontinuous signal applied to the system can be used as a technique to model the signal activity required in order to achieve the ideal performance from the system. Due to these properties, variable structure control has been proved to be applicable to a wide range of problems in oil-chemical process control, aircraft and missile guidance systems, pneumatic and hydraulic systems, time-delay systems, mechanical systems, robotic systems, electric drives, nuclear reactors, vehicle and motion control etc. Enforcing sliding motion in this manifold is equivalent to a stability problem of the m-order system.

The first stage is often termed sliding manifold design problem and the second sliding mode existence problem. The conditions $s\dot{s} < 0$ in general is referred to us as a reaching condition for the state to reach the sliding manifold s(t)=0 after a finite time for arbitrary initial conditions.

In general, the theory of variable structure systems has made several important contributions to the problem of robust stabilization. Now, it is suitable to continue the presentation of brief historical

Published by WSEAS Press
www.wseas.org
ISBN: 978-960-474-050-5
ISSN: 1790-5117

outline of emergence, advances and formation of the basic ideas and concepts of the variable structure systems and sliding mode control.
Variable structure control systems with sliding mode was first proposed, introduced and elaborated in the Soviet Union by Emelyanov in the 1950s and advanced by his several co-researches of first generation: Utkin, Taran, Kostyleva, Shubladze, Ezerov, Dubrovsky, Khabarov, Fedotova, Behrmant, Drazenovic, Bakakin, Dudin, Buyakas, Shigin, Grittsenko, Kortnev, Zhiltsov, etc [1]-[6] and in parallel by Barbashin and his several co-researches: Gerashcenko, Tabueva, Eidinov, Bezvodinskaya, etc [7].
The extensive investigation and establishing of variable structure theory by Emelyanov and Utkin etc. group's took place in the division of the Research Institute of Control Sciences (IAT) in Moscow headed by academician B.N. Petrov [4] where Emelyanov and Utkin were awarded in 1972 by highest scientific state award in the former USSR Lenin Prize for the discovery of the variable structure principles. In those years variable structure systems were extensively and systematically investigated under directions of Petrov, Emelyanov, Utkin, etc. by the several groups in the center and various regions of the USSR. The author of this book was extensively collaborated with the Moscow's groups and etc in 1970-1991 until the fall of the USSR. This period can be referred to us as second period of advances of theory of the variable structure control and their first industrial applications by the several co-researches of the second generation. In this period an extensive effort has been made to improve dynamic performances of linear, some times non-linear system by using the concept of the variable structure control. Roughly speaking, a variable structure controller uses a number of linear feedback gains according to the representative point of the state space. Once the representative point reaches the sliding manifold the system dynamics is improved and the control will force the state to remind in it. The special operation mode is called the sliding mode and the conditions required to achieve it are called the hitting or reaching conditions. Here, it was noted that an asymptotically stable closed loop system could be formed from two unstable linear systems by combining useful properties of the composite subsystems. Furthermore, the system may be designed to possess new properties not present in any of the composite structures.
In first pioneering monograph [1], the plant considered was a linear second order system presented in canonical phase variables from. This approach later is extended to the general form advanced by [8] and [9] published in the first period of investigations of the variable structure control until 1970. Then in the second period of the advances of the theory of variable structure systems, the systems of the general state space form were considered by [8]-[10].
Formation of well known conventional or classical theory of linear feedback control systems in 1950's, originated by well-known early historical Polzunov water level and flow regulator in steam engine tank (Russia, 18 century) and Watt steam engine with centrifugal fly-ball governor (Britannia, 18 century)-Polzunov-Watt feedback principle-and theoretical fundamentals work of Maxwell, Vyshnegradsky and Stodola, etc (19 century), on the one hand, and existence of fundamental works by Lyapunov [11], Andronov, Vitt and Khaikin [12], Tsypkin [13], Flugge-Lotz [14] etc on the other hand, had prepared the necessary background for the emergence of the variable structure principles.
Variable structure systems has found application in control engineering of wide range of problems in electric drives and generators, oil-chemical process control, vehicle and motion control [9].
A set of new invented pneumatic variable structure controllers and systems for automation of various types of plants of chemical, oil-chemical industries was brought to production status and forty two sets have been installed in six plants in the USSR [15]-[56].
In the petroleum, petrochemical and some other industries, there exists a wide class of processes that feature instability in critical (economically advantageous) modes, have non-stationarities and disturbances, numerous uncontrollable factors, interrelated controlled parameters and delays. In particular, the study of the dynamic of catalytic processes (alkylation by sulfuric acid is alkyl benzene production or copolymerization in production of butyl rubber) and qualitative analysis of temperature stability of the non-linear models of chemical reactors have shown that the state plane of the plant has two or more singular points and always has at least one saddle point which is indicative of the substantial non-linearity in plant equations. The study of dynamics of catalytic process control systems demonstrates that the domain of initial conditions allowing linear controllers to maintain stability of non-linear processes is rather bounded. In the critical models, the linear process control becomes impracticable. If process parameters vary over a wide range, the linear systems cannot provide high-

Published by WSEAS Press
www.wseas.org
ISBN: 978-960-474-050-5
ISSN: 1790-5117

quality control. For the processes under consideration the efficiency of control algorithms with deliberately induced sliding modes has been theoretically substantiated.
The institute NIPINeftekhimavtomat in collaboration with the Institute of Control Sciences has designed a new "Universal set of pneumatic variable-structure devices" intended for the lower level of automation hierarchy of a wide class of processes in various industries where pneumatics has become accepted [48], [54] and [56].
Notably, unlike the set SUPS (Utkin and Kostyleva, 1981 [57]) where sliding motion is used only in data handling units, in the new set sliding motions may be induced for the first time in the main loops of systems controlling a wide variety of processes. This is due to the fact that for majority of petroleum and petrochemical processes the time constants are of the order of minutes, while the USEPPA (The set of pneumatic elements including controllers and units performing elementary operations such as summing, amplification, integration etc. which is produced in the USSR) elements allows one to generate self-oscillations at much higher frequencies, and the diaphragm actuators are known to be basically able to operate in these modes.
The research institute NIPI Neftekhimavtomat has brought the new set to the production status, and a batch of 42 complete sets has been installed at six Soviet plans for control of chemical processes.
The experience gained during several years of their operation in industrial environment, has demonstrated that these systems are more stable, reliable and maintainable, and in industrial environment have 2 to 6 times better control performance indices (dynamic accuracy, maximum overshoot, steady state error, settling time, etc.) as their linear counterparts. The aggregate economical efficiency of industrial application of pneumatic variable structure controllers set was about one million soviet ruble in 1981.This work is awarded by first class certificate of Institute of Control Sciences AN SSSR and confirmed by director academician V.A. Trapeznikov.
This is the first industrial confirmation of the existence and usefulness of the sliding mode. However, usage of sliding mode idea did not appear outside of USSR until the mid of 1970s when a book by Itkis (1976) [58] and survey paper by Utkin (1977) [10] were published in English. Later a survey paper DeCarlo, Zag and Matthews [59] provides a good tutorial introduction.
Since 1980s more and more researches in various aspects of sliding mode control has been done world wide by Young (1978) [60], Slotine and Sastry (1983) [61], Izosimov, Matic Utkin, Sabanovic, (1978) [62], Kaynak, Harashima, and Hashimoto (1984) [63], Sira-Ramizer, (1988) [64], Fu (1991) [65], Sira-Ramizer, (1993) [66], Elmali and Olgac (1993) [67], Itkis (1976) [68], Drazanovic (1969) [69], Zinober, El-Ghezavi, and Billings, (1982) [70], Walcott and Zak (1988) [71], White (1983) [72], El-Ghezavi, Billings and Zinober (1983) [73]-[74], Ercshler, Roubellat and Vernhes (1974) [75], Hikaita (1988) [76], Cheres (1989) [77], Spurgeon (1991) [78], Gutman (1979) [79], Ryan (1983) [80], Dorling and Zinober (1986) [81], (1988) [82], Woodham and Zinober (1993) [83], Hong and Wu (1989) [84]-[85], Zhou and Fisher (1992) [86], Slotine, Hedrick, and Misawa (1987) [87], Slotine and Li (1991) [88], Hung, Gao, and Hung (1993) [89], Asada and Slotine (1986) [90], Abdallah, Dawson, Dorato and Jamshidi (1991) [91], Banks (1986) [92], Gau (1990) [93], Bartolini (1989) [94], Sarpturk, Istefanopulos, and Kaynak (!987) [95], Singh (1989) [96], (1990) [97], Slotine (1984) [98], Vadali (1986) [99], Yeung and Chen (1988) [100], Ferrara, Magnani and Scattolini (2002) [101], Chen and Fukuda (1997) [102], Furuta (1990) [103], Edwards and Spurgeon (1998) [104], Utkin, Guldner and Shi (1999) [105], Young (1993) [106], Palm, Driancox and Hellendoorm (1997) [107], Zinober (1994) [108] and (1990) [109], Flippov (1988) [110], Young and Özgüner (1999) [111], Choi (2004) [112], Spong and Vidyasagar (1989) [113], Emelyanov, Burovoi, and Levada (1998) [114], Young, Utkin, and Özgüner (1999) [115], Garofalo and Glielmo (1996) [116], Watanabe, Fukuda and Tzateftas (1992) [117], Parlakci, Jafarov, and Istefanopulos (2004) [118], (2005) [119], Calise and Kramer (1984) [120], Esfandiari and Khalil (1991) [121], Khalil (2002) [122], Oh and Khalil (1995) [123], Jafarov and Tasaltin (1998,2000) [124],[126], Perruquetti and Barbot (2002) [127], Ha, Rye, and Durrant-Whyte (1999) [128], Sage, De Mathelin and Ostertag (1999) [129], Lewis, Dawson and Abdallah (2004) [130], Bailey and Arapostathis (1987) [131], Stepanenko and Su (1993, 1999) [132], [133], Zhihong and Palaniswami (1994) [134], Parlakci, Jafarov, Istefanopulos and Belegradek (2001) [135], Istefanopulos, Jafarov and Parlakci (2001) [136], Sabanovic, Fridman and Spurgeon (2004) [137], Sciavicco and Siciliano (1996) [138], Choi (1997, 2002) [139]-[140], Singh, Steinberg and Page (2003) [141], Yeh, Chien and Fu (2003) [142], Jerouane, Sepehri and Lamnabhi-Lagarrigue (2004) [143], Dodds and Walker (1991) [144], Fu, Gonzales and Lee (1987) [145], Fossard (1993) [146],

Published by WSEAS Press
www.wseas.org
ISBN: 978-960-474-050-5
ISSN: 1790-5117

Shtessel (1998) [147], Dzhafarov-Jafarov and Iskenderov (1980) [148], Parlakci, Jafarov and Istefanopulos (2003) [149], Levine (1996) [150], Er, Zribi, Lee and Mastorakis (1998) [151], Yu and Chen (2003) [152], Yu, X. and Yu, S. (2000) [153], Chinaev, Dzhafarov-Jafarov and Iskendereov (1979) [154]etc.

Nowadays, this period of the advances of the variable structure control can be referred to us as a third period of the advances of the sliding mode control theory and practice. Recently, several special issues of International Journals and International Workshops are devoted to variable structure systems and sliding mode control [155]-[159]. Some new theoretical and practical results are summarized in these references.

B. Time-Delay Systems

The sliding mode control approach provides an efficient way to tackle challenging robust stabilization problems not only for finite-dimensional dynamic systems, should also be considered for systems with aftereffect.

It is well known that major engineering and communication systems contain time-delay and parameter uncertainties subject to external disturbances. The existence of time-delay effect is frequently a source of instability. Robust stabilization of time-delay system is not so easy as that of a delay-free system. Therefore, the problem of robust stabilization of uncertain dynamical systems with time-delay has received considerable attention of control researchers. From the point of view of robust control design approaches the variable structure control concept has played most important role because of its robustness to parameter uncertainties and external disturbances. There are a large number of such papers in literature. However, the number of papers concerning time-delay systems is not large. Shyu and Yan (1993) [160] have treated an integral variable structure controller involving equivalent control term and relay term for stabilization of time delay systems with parameter uncertainties. Robust β-stability condition for unforced perturbed system is derived by using Razumikhin-Hale type theorem. System matrix and its variation are cancelled by equivalent control term while relay term is used only for generation the sliding mode on the integral sliding surface. However, actually exact equivalent control term is unavailable since it is dependent on unknown norm-bounded parameter uncertainties. Finally, VSC is designed only for nominal time-delay system. Moreover, global stability condition needs the existence of stable system matrix. In spite of this, Shyu and Yan type controller for the considered system is designed very well.

Luo and De La Sen (1993) [161] have designed the VSC including absolute values of state and delayed-state feedback for robust stabilization of single input-delayed systems with parameter uncertainties. Global stability condition is derived by using matrix measure method. Such design approach is generalized for single state and input delayed SISO and MIMO system with parameter uncertainties and external disturbances (Luo, De La Sen and Rodellar, 1997 [162]). Robustness properties of sliding time-delay systems are analyzed.

Koshkouei and Zinober (1996) [163] have designed a sliding mode controller including equivalent control term and relay term for stabilization of time-delay canonical MIMO system with matched external disturbances by using Lyapunov-Krasovskii V-functional method. Lyapunov-Krasovskii V-functional method (Lyapunov 1992 [11], Krasovskii 1956, 1959 [164], [165]) has been introduced to stability analysis of variable structure systems with time-delay by Jafarov (1980, 1998) [166], [167].

Lyapunov-Krasovskii V-functional method has been used for stabilization of multiple state-delayed linear systems by Nazaroff (1973) [168]. Four-term sliding mode controller design for multiple state-delayed systems with mismatching parameter perturbations and matching external disturbances are considered by Li and DeCarlo (2001 and 2003) [169] and [170]. This approach is applied to systems with differentiable time-varying delays (Li and DeCarlo, 2003 [170]).

Recently, several sliding mode controller design methods for uncertain systems with and without time-delay are considered by many authors.

The behavior and design of sliding mode control system with state and input delays are considered by Perruquetti and Barbot (2002) [127] using Lyapunov-Krasovskii functionals.

Latest research results in this area are given in survey paper by Richard, Gouaisbaut and Perruquetti (2001) [171]. The combination of delay phenomenon with relay actuators makes the situation much more complex. Designing a sliding controller without taking delays into account may lead to unstable or chaotic behaviors or, at least, results in highly chattering behaviors.

Published by WSEAS Press
www.wseas.org
ISBN: 978-960-474-050-5
ISSN: 1790-5117

Four-term robust sliding mode controllers for matched uncertain systems with single or multiple, constant or time-varying state delays are designed by Gouaisbaut, Dambrine, and Richard (2002) [172] by using Lyapunov-Krasovskii functionals and Lyapunov-Razumikhin function combined with LMI's techniques.
Shyu and Yan (1993) [160] design approach is extended to a combined four-term sliding mode controller design for matched/mismatched uncertain time-delay systems with a class of nonlinear inputs by Yan (2003) [173]. Delay-dependent stability condition is derived by using quadratic Lyapunov function already involving an unknown delay constant. Conservativeness example with good results is presented.
An analysis and design of bounded switching feedback controller for delay free variable structure systems with matched lumped uncertainties are presented by Choi (2004) [112].
In general, an overview of some recent advances and open problems in time-delay systems and sliding mode control for systems with input/output delays is given in large survey paper by Richard (2003) [174]. Some delay-dependent stability criteria for time-delay systems are advanced by Jafarov (2001, 2003) [175], [176].
Another type of VSC known as the min-max controller for robust stabilization of time-varying state-delayed dynamical systems with matching parameter uncertainties and external disturbance has been designed by Cheres, Gutman and Palmor (1989) [177]. The global stability and β-stability conditions are formulated in terms of differential Riccati equations by using Razumikhin-Hale type theorem (Razumikhin 1956 [178] and Hale 1977 [179]). Stability analysis of variable structure systems with time-delay by using Lyapunov-Krasovskii functional considered by Jafarov (1978, 1980, 1987 and 2001) [180]-[183] and Jafarov and Kalyon (1997) [184]. Brief analysis of reviewed papers shows that various types of sliding mode controllers and design techniques for uncertain systems with and without time-delay are considered. However, global asymptotical stability and sliding conditions for stabilization of multivariable time-delay systems with parameter perturbations and external disturbances by using a modified Shyu and Yan controller and combined sliding mode controller are not investigated systematically. In light of above mentioned design approaches, we will develop two types of modified simple two-terms sliding mode controllers without an equivalent control term for perturbed and delayed systems with unstable system matrix. Some new design techniques will be advanced.
Time-delay effect is frequently encountered in oil-chemical systems, metallurgy and machine-tool process control, nuclear reactors, bio-technical systems missile-guidance and aircraft control systems, aerospace remote control and communication control systems, etc. The presence of delay effect complicates the analysis and design of control systems. Moreover, time-delay effects in the state vector, especially in the control input degrade the control performances and make the closed–loop stabilization problem challenging. For better understanding of time-delay effect properties let us briefly analyze the existing design methodologies. There are three basic control design methodologies for the stabilization of input delayed systems: 1) Smith predictor method, 2) Reduction method, 3) Memoryless control approach.
A common design method of input-delayed systems is well known Smith predictor control to cancel the effect of time-delay. Smith predictor is a popular and very effective long delay compensator for stable processes. The main advantage of the Smith predictor control method is that, the time-delay is eliminated from the characteristic equation of the closed-loop system. Classical Smith predictor was suggested by Smith (1957), (1958) [185], [186]. Modified Smith predictor scheme's have been advanced by Marshall (1974) [187], Aleviskas and Seborg (1973) [188], Watanabe and Ito (1984) [189], Watanabe, Ishiyama and Ito (1983) [190], Al-Sunni and Al-Nemer (1997) [191], Majhi and Atherton (1999) [192], etc.
Note that Smith Predictor removes only the time–delay from closed–loop while it is remained in feed-forward path. Therefore, it is also an input-delayed system. An extension of the Smith predictor method for the MIMO systems with state and input delays is considered by Aleviskas and Seborg (1973) [188]. The control algorithm in a Smith Predictor is normally a PI-controller. The D–part normally is not used since the prediction is performed by the dead–time compensation. Prediction through derivation is not suitable when the process contains a long dead– time. Replacing a PID-controller with a Smith predictor gives a drastic increase in operational complexity. This is the main reason why most processes with long time–delay are still controlled by PI-controllers. A modified

Published by WSEAS Press
www.wseas.org
ISBN: 978-960-474-050-5
ISSN: 1790-5117

Smith predictor based on industrial PI-controller is designed by Hagglund (1996) [193]. A modified Smith predictor and controller for unstable processes with time–delay are developed by DePaor (1985) [194]. Modified Smith predictor control for multivariable systems with delays and unmeasurable disturbances is extended by Watanabe, Ishiyama and Ito (1983) [190]. Modified Smith predictor and controller design procedure for unstable processes is proposed by Majhi and Atherton (1999) [192]. A Smith predictor fuzzy logic based PI-controller design for processes with long dead–time is proposed by Al-Sunni and Al-Nemer (1997) [191].

The second important control design method of input–delayed systems is the reduction method that was suggested by Kwon and Pearson (1980) [195].

This control strategy has been shown to overcome some of inherent problems of the conventional Smith predictor method. For example, unstable system can be stabilized and the effects of the initial conditions are taken into consideration. The reduction method, however, suffers from a weakness that the complete reduction to a delay free system is only possible with an exact model of the system. Reduction method is extended to time–varying system with distributed delays by Arstein (1996) [196]. A new robust stabilizing controller for a multiple input–delayed system with parametric uncertainties by using a modified reduction method is proposed by Moon, Park and Kwon (2001) [197]. However, an industrial implementation of reduction method controllers is much complicated than conventional method.

The third design approach to stabilization of input-delayed systems is so-called memoryless control method, which is similar to the conventional linear control method. Such controllers have feedback of the current state only, are designed to delay–independent stabilization of input–delayed systems by using Lyapunov–Krasovskii functional method, for example, see Choi and Chung (1995) [198], Kim, Jeung and Park (1996) [199], Su, Chu and Wang (1998) [200], etc. However, this approach is conservative when the actual size of the delay is small. In fact, information on the size of the delay is often available in many processes. Hence, by using delay information and past control history as well as the current state delay–dependent controllers may provide much better performance than memoryless controllers.

Some examples concerning time-delay systems and stability analysis are given by Kolmanovski and Nosov (1986) [201], Elsgolts and Norkin (1971) [202], Rezvan (1983) [203], Gorecki, Fuksa, Gabrovski and Korytovski (1989) [204], Marshall, Goreki, Walton and Korytowski (1992) [205], Dugard and Verriest (1998) [206], Wang, Lee, and Tan (1999) [207], Mac Donald (1989) [208],

In analysis and design of time-delay systems, in general, the Lyapunov-Krasovskii functional method is commonly used. Recent advances in time-delay systems are presented by Richard (2003) [174], Fridman and Shaked (2003) [209], Jafarov (1990), (1999), (2000), (2003), (2003) and (2005) [210]-[215], Niculescu and Gu (2004) [216], Niculescu (2001) [217], Mahmoud (2000) [218], Gu, Kharitonov and Chen (2003) [219], Boukas and Liu (2002) [220]. Some sufficient delay-dependent stability conditions for linear delay perturbed systems are derived using exact Lyapunov-Krasovskii functionals by Kharitonov and Niculescu (2003) [221]. Several new LMI delay-dependent robust stability results for linear time-delay systems with unknown time-invariant delays by using Padé approximation are presented by Zhang, Knospe and Tsiotras (2002) [222]. Both delay-independent and delay-dependent robust stability LMI's from conditions for linear time-delay systems with unknown delays by using appropriately selected Lyapunov-Krasovskii functionals are systematically investigated by Zhang, Knospe and Tsiotras (2003) [223] in another paper. Stability of the internet network rate control with diverse delays based on Nyquist criterion is considered by Tian and Yang (2004) [224]. Improved delay-dependent stability conditions for time-delay systems in terms of strict LMI's avoiding cross terms are developed by Xu and Lam (2005) [225]. A new state transformation is introduced to exhibit the delay-dependent stability condition for time-delay systems by Mahmoud and Ismail (2005) [226]. Determining controllable sets from a time-delay description is given by Rhodes and Morari (1996) [227].

Some new approaches to analysis and design of time-delay systems are advanced by Su, Ji, and Chu (2005) [228], Wu, He, She and Liu (2004) [229], Kim (2001) [230], Mahmoud and Al-Muthairi (1994) [231], Fiagbedzi and Pearson (1986) [232], Moon, Park, Kwon and Lee (2001) [233], Olgac and Sipahi (2002) [234], Zheng, Cheng and Gao, (1993) [235], Hu, Basker and Crisalle (1998) [236], Jing, Tan and Wang (2004) [237], Wang and Unbehauen (2000) [238], Cao and Sun (1998) [239], Kim, Park and Oh (2000) [240].

Published by WSEAS Press
www.wseas.org
ISBN: 978-960-474-050-5
ISSN: 1790-5117

Resuming the brief analysis of references concerning the existing design approaches, it can be concluded that time-delay systems are intensively investigated recently by researchers in light of the above mentioned three directions. Several books and a great number of Journal papers recently written on variable structure control and time-delay systems. However a few papers are written in their intersection. This book is one more item in that series.

Recent advances in sliding mode control and time-delay systems and their intersection are presented in this book which, cover the essential background to modern robust variable structure control analysis and design method and sliding mode control of time-delay systems. The book consists of six chapters and is organized as follows.

Chapter 1 considers analysis and design of robust linear and variable structure control of uncertain systems without time-delay. Sliding mode control design techniques for aircrafts and missiles are presented in Chapter 2. Variable structure relay, P, PD, PID - controller design methods for robot manipulators with non-linear dynamics are systematically developed in Chapter 3. Variable structure control analysis and design methods of time-delay systems with parameter uncertainties and external disturbances are considered in Chapter 4. In this chapter, robust stabilization of multivariable single and multiple state-delayed systems with mismatching parameter uncertainties and matching/mismatching external disturbances are considered. Two type of robust sliding mode controllers design techniques are presented. Chapter 5 formulates reduced and full orders sliding mode observers design methods for uncertain systems with and without time-delay systems. Stability analysis and control of time-delay systems using reduction method and Lagrange mean value theorem are described in Chapter 6.

This book will be useful I hope for researchers and practitioners in field of Control Engineering, and also for teachers and graduate students on mentioned courses. The material of this book is original and published in the pages of the several archival Journals and International Conference Proceedings, which are results of research and teaching activities of author in Aeronautical and Astronautical Engineering Faculty of Istanbul Technical University since 1996.

I wish to thank to our Ph.D. student Erkan Abdulhamitbilal for helping the computer preparing of the manuscript.

Prof. Dr. Elbrous M. Jafarov
ITU, Istanbul, Turkey
July 2008

References

1. Emelyanov, S.V., 1967, Variable Structure Control Systems. Moscow, Nauka (in Russian).
2. Emelyanov, S.V., 1957, A technique to develop complex control equations by using only the error signal of control variable and its first derivative. Avtomatika I Telemekhanika, no.10, pp 874-885(in Rissian).
3. Emelyanov, S. V., Utkin, V.I., Taran, V. A., Kostyleva, N. E., Shubladze, A.M., Ezerov, V.B., and Dubrousky, E. N., 1970, Theory of Variable Structure Systems. Moscow, Nauka (in Russian).
4. Petrov, B.N. and Emelyanov, S.V. (Editors), 1968, Variable Structure Systems and Their Applications to Flight Automation. Moscow, Nauka (in Russian).
5. Shigin, E.K., 1958, On improvement of transient processes with the help of correction networks with varying parameters. Automatica and Remote Control, no. 4, pp. 299-304.
6. Zhiltsov, K.K., 1974, Approximate Methods for Calculations of Variable Structure Systems. Moscoz, Nauka (in Russian).
7. Barbashin, E.A., 1967, Introduction to the Theory of Stability. Moscow, Nauka (in Russian).
8. Utkin, V.I., 1974, Sliding Modes and their Application in Variable Structure Systems. Moscow, Nauka (in Russian).
9. Utkin, V.I., 1981, 1992, Sliding Modes in Control and Optimization. Moscow, Nauka (in Russian); Berlin, Springer-Verlag.
10. Utkin, V.I., 1977, Variable structure system with sliding modes. IEEE Transactions on Automatic Control, vol. 22, no.2, pp. 212-222.

Published by WSEAS Press
www.wseas.org
ISBN: 978-960-474-050-5
ISSN: 1790-5117

11. Lyapunov, A.M., 1892, The General Problem of the Stability of Motion. Kharkov (in Russian); 1907, Translated in French, Ann. Fac. Science, Touluse 9, pp203-474; 1949, Reprinted in Ann. Math. Study no.17, Princeton Universtiy Press; 1992, International Journal of Control, vol. 55, pp. 531-773.
12. Andronov, A.A., Vitt, A.A. and Khaikin, S., 1937, 1959, Theory of Oscillations. Moscow, Fizmatgiz (in Russian).
13. Tsypkin, Y.Z., 1955, Theory of Relay Control Systems. Moscow: Gostekhizdat (in Russian).
14. Flugge-Lotz, I., 1953, Discontinuous Automatic Control, Princeton University Press, Princeton, New Jersey.
15. Dzhafarov-Jafarov, E.M. and Mamedov, V.A., 1970, Synthesis of optimal system with variable structure, Proceedings of All-Union Conference on Application of Computers for Complex Automation of Petrochemical Industry, pp. 31, TsNIITE Priborostroenie, Moscow (in Russian).
16. Dzhafarov-Jafarov, E.M. and Mamedov, V.A., 1971, Optimization of variable structure system with respect to integral performances, Journal of Za Teknicheski Progres, no. 2, pp. 18-19, Baku, (in Russian).
17. Aliev, R.A., Dzhafarov-Jafarov, E.M. and Mamedov, V.A., 1972, Construction of pneumatic differentiating device with variable structure, Journal of Za Teknicheski Progres, no. 4, pp. 2-4, Baku, (in Russian).
18. Aliev, R.A. and Dzhafarov-Jafarov, E.M., 1973, Time optimal control of system with variable structure, Journal of Za Teknicheski Progres, no. 5, pp.1-3, Baku, (in Russian).
19. Dzhafarov-Jafarov, E.M., 1973, Theorical Problems and Industrial Implementation of Optimal Variable Structure Control Systems, Ph.D. Thesis, Research Institute NIPINefteKhimAvtomat 1972, (Supervisors: Prof. A.A. Abdulayev and Ph.D. R.A. Aliev) IMM and IK Academy Sciences of Azerbaijan; Moscow, TsNIIKA, VNTIITzentr, 150 p.
20. Dzhafarov-Jafarov, E.M.,1977, Industrial variable structure systems for sulfur-acid alcilation, Khimicheskaya Promyshlennost (Chemical Industry) no.2, pp.150-151.
21. Dzhafarov-Jafarov, E.M. and Fayazov M.M., 1976, Pneumatic variable structure controller, USSR Inventor's Certificate, A.C. No.533910, Bulleten Izobret (Invention Bulletin), vol.40, Moscow.
22. Dzhafarov-Jafarov, E.M., 1977, Pneumatic variable structure controller, USSR Inventor's Certificate, A.C. No.542171, Bulleten Izobret (Invention Bulletin), vol.1, Moscow.
23. Dzhafarov-Jafarov, E.M. and Abdullaev, F.S., 1977, Pneumatic controller, USSR Inventor's Certificate, A.C. No.582493, Bulleten Izobret (Invention Bulletin), vol.44, Moscow.
24. Abdullaev, F.M., Dzhafarov-Jafarov, E.M. and Fayazov M.M., 1976, Pneumatic variable structure controller, USSR Inventor's Certificate, A.C. No.5540256, Bulleten Izobret (Invention Bulletin), vol.47, Moscow.
25. Dzhafarov-Jafarov, E.M., Abdullaev, F.S. and Fayazov M.M., 1977, Pneumatic variable structure controller, USSR Inventor's Certificate, A.C. No.566238, Bulleten Izobret (Invention Bulletin), vol.27, Moscow.
26. Dzhafarov-Jafarov, E.M., Fayazov M.M. and Abdullaev, F.S., 1977, Pneumatic controller, USSR Inventor's Certificate, A.C. No.582494, Bulleten Izobret (Invention Bulletin), vol.44, Moscow.
27. Dzhafarov-Jafarov, E.M. and Abdullaev, F.S., 1978, Pneumatic logic block for variable structure controller, USSR Inventor's Certificate, A.C. No.589589, Bulleten Izobret (Invention Bulletin), vol.3, Moscow.
28. Dzhafarov-Jafarov, E.M., Abdullaev, F.S. and Fayazov M.M., 1978, Pneumatic proportional variable structure controller, USSR Inventor's Certificate, A.C. No.601660, Bulleten Izobret (Invention Bulletin), vol.13, Moscow.
29. Dzhafarov-Jafarov, E.M. and Abdullaev, F.S., 1978, Pneumatic computational device, USSR Inventor's Certificate, A.C. No.596963, Bulleten Izobret (Invention Bulletin), vol.9, Moscow.
30. Dzhafarov-Jafarov, E.M., Fayazov M.M. and Abdullaev, F.S., 1978, Pneumatic variable structure controller, USSR Inventor's Certificate, A.C. No.622046, Bulleten Izobret (Invention Bulletin), vol.32, Moscow.
31. Dzhafarov-Jafarov, E.M., Fayazov M.M. and Abdullaev, F.S., 1978, Pneumatic variable structure controller, USSR Inventor's Certificate, A.C. No.631869, Bulleten Izobret (Invention Bulletin), vol.41, Moscow.

Published by WSEAS Press
www.wseas.org
ISBN: 978-960-474-050-5
ISSN: 1790-5117

32. Dzhafarov-Jafarov, E.M., Fayazov M.M. and Abdullaev, F.S., 1978, Pneumatic variable structure controller, USSR Inventor's Certificate, A.C. No.631868, Bulleten Izobret (Invention Bulletin), vol.41, Moscow.
33. Dzhafarov-Jafarov, E.M., Fayazov M.M. and Abdullaev, F.S., 1979, Pneumatic variable structure controller, USSR Inventor's Certificate, A.C. No.679939, Bulleten Izobret (Invention Bulletin), vol.30, Moscow.
34. Dzhafarov-Jafarov, E.M., Fayazov M.M. and Abdullaev, F.S., 1980, Pneumatic controller, USSR Inventor's Certificate, A.C. No.752229, Bulleten Izobret (Invention Bulletin), vol.28, Moscow.
35. Dzhafarov-Jafarov, E.M., Fayazov M.M. and Abdullaev, F.S., 1979, Adaptive pneumatic controller, USSR Inventor's Certificate, A.C. No.661505, Bulleten Izobret (Invention Bulletin), vol.17, Moscow.
36. Dzhafarov-Jafarov, E.M., Fayazov M.M. and Abdullaev, F.S., 1979, Pneumatic adaptive controller, USSR Inventor's Certificate, A.C. No.656022, Bulleten Izobret (Invention Bulletin), vol.13, Moscow.
37. Dzhafarov-Jafarov, E.M., Fayazov M.M. and Abdullaev, F.S., 1979, Pneumatic variable structure controller, USSR Inventor's Certificate, A.C. No.679939, Bulleten Izobret (Invention Bulletin), vol.30, Moscow.
38. Dzhafarov-Jafarov, E.M., Fayazov M.M. and Abdullaev, F.S., 1979, Pneumatic variable structure controller, USSR Inventor's Certificate, A.C. No.684508, Bulleten Izobret (Invention Bulletin), vol.33, Moscow.
39. Dzhafarov-Jafarov, E.M., Fayazov M.M. and Abdullaev, F.S., 1980, Pneumatic proportional controller, USSR Inventor's Certificate, A.C. No.746412, Bulleten Izobret (Invention Bulletin), vol.25, Moscow.
40. Dzhafarov-Jafarov, E.M., Iskenderov, I.A., and Abdullaev, F.S., 1979, Device for position control of floating plants (offshore platform), USSR Inventor's Certificate, A.C. No.646313, Bulleten Izobret (Invention Bulletin), vol. 5, Moscow.
41. Dzhafarov-Jafarov, E.M. and Abdullaev, F.S., 1980, Pneumatic adaptive variable structure controller, USSR Inventor's Certificate, A.C. No.742872, Bulleten Izobret (Invention Bulletin), vol.28, Moscow.
42. Dzhafarov-Jafarov, E.M., Askerov, D.A., Fayazov M.M., Abdullaev, F.S. and Iskenderov, I.A., 1980, Pneumatic controlling device for regulation of temperature and level of bottom of rectification coloumn, USSR Inventor's Certificate, A.C. No.752243, Bulleten Izobret (Invention Bulletin), vol.28, Moscow.
43. Dzhafarov-Jafarov, E.M., Fayazov M.M. and Abdullaev, F.S., 1980, Pneumatic variable structure controller, USSR Inventor's Certificate, A.C. No.769489, Bulleten Izobret (Invention Bulletin), vol.37, Moscow.
44. Dzhafarov-Jafarov, E.M., Fayazov M.M. and Abdullaev, F.S., 1982, Control system for catalytic polymerization process, USSR Inventor's Certificate, A.C. No.868704, Bulleten Izobret (Invention Bulletin), vol.36, Moscow.
45. Dzhafarov-Jafarov, E.M., Fayazov M.M. and Abdullaev, F.S., 1982, Device for control for catalytic alkalization process, USSR Inventor's Certificate, A.C. No.985799, Bulleten Izobret (Invention Bulletin), vol.56, Moscow.
46. Dzhafarov-Jafarov, E.M., Fayazov M.M., and Abdullaev F.S., 1982, Automatic process control of catalitic polymerization, USSR Inventor's Certificate, A.C. No.868704, Bulleten Izobret (Invention Bulletin), vol.36, Moscow.
47. Dzhafarov-Jafarov, E.M., 1978, Problem of optimization of systems with variable structure, Izv. AN SSSR Tekhnicheskaya Kibernetika (Engineering Cybernetics), no. 3, pp. 171-175, Moscow (in Russian).
48. Abdullayev A.A., Utkin, V.I., Dzhafarov-Jafarov, E.M., Fayazov M.M., and Abdullayev F.S., 1978, A set of new pneumatic variable structure controllers, Abstracts of XIII All-union conference on pneumautics, Donetzk, Moskow, Nauka, pp. 144-146, (in Russian).
49. Dzhafarov-Jafarov, E.M., Fayazov M.M., Abdullayev F.S. and Ismailov, V., 1977, Design of variable structure control system for a sulfur-acid alcilation reactor, Automation and Instromation (A i KIP) no. 10, pp. 10-17, Moscow (in Russian).

Published by WSEAS Press
www.wseas.org
ISBN: 978-960-474-050-5
ISSN: 1790-5117

50. Dzhafarov-Jafarov, E.M., 1979, Approximate computational method of combined systems with variable structure and commutated actions on the basis of measured disturbances, Izv. VUZ SSSR, Elektromekanika, no. 4, pp. 369-371, Novocherkask (in Russian).
51. Dzhafarov-Jafarov, E.M., 1980, Stability of variable structure systems with an unstable linear plant, Novel Trends in the Theory of VSS, Proceedings of VNIIS AN SSSR, Emelyanov, S.V. (Editor), issue 4, pp. 28-30, Moscow (in Russian).
52. Dzhafarov-Jafarov, E.M., and Iskenderov, I. A., 1978, Optimization of double-connected automatic regulation systems with variable structure, Avtomatika, no. 3, pp. 44-49, Kiev (in Russian).
53. Abdulayev A.A. and Dzhafarov-Jafarov, E.M., 1979, A frequency stability criterion for variable structure systems with time-delay, Avtomatika i Telemekanika (Automatica and Remote Control), no. 6, pp. 198-205, Moscow (in Russian).
54. Utkin, V.I., Vostrikov, A.S., Dzhafarov-Jafarov, E.M., Kostyleva, N.E., Sabanovic, A, Bondarev, S.A., Spivak, L.M. and Izosimov, D.B., 1985, Applications of sliding modes in automation of technical plants, Izmereniya, Kontrol and Automatizatsia IKA (Measurement, Control and Automation), 53, no. 1, pp. 74-84, Moscow (in Russian).
55. Dzhafarov-Jafarov, E.M., 1981, Multistructural Control of Continuous Processes: Theory, Implementation and Application, Avtoreferate of D.Sc.(Eng) Thesis, MIEM, Mosow, 50 pages, (in Russian).
56. Dzhafarov-Jafarov, E.M., 1982, Multistructural Control of Continuous Processes: Theory, Implementation and Application, D.Sc.(Eng) Thesis, NIPINNefteKhimAvtomat, (Azerbaijan), 1981 Institute of Control Science Moscow, (Supervisor: Prof. V.I. Utkin) MIEM-LETI, 1982 VNTIITzenter, Moscow 450 pages, (in Russian).
57. Utkin,V.I. and Kostyleva N.E., 1981, Principles of algorithm design for local automation systems with variable structure. I.K.A., vol.35, no.1, pp. 27-35 (in Russian).
58. Itkis, U., 1976, Control Systems of Variable Structure, New York: Wiley.
59. DeCarlo, R.A., Zak, S.H. and Matthews, G.P., 1988, Variable structure control of nonlinear multivariable systems: a tutorial, Proceedings of the IEEE, vol. 76, no. 3., pp. 212-232.
60. Young, K.K.D., 1978, Controller design for a manipulator using theory of variable structure systems, IEEE Transactions on Systems, Man and Cybernetics, vol. SMC-8, no.2, pp.101-109.
61. Slotine, J.J. and Sastry, S.S., 1983, Tracking control of nonlinear systems using sliding surfaces with application to robot manipulator, International Journal of Control, vol. 38, no. 2, pp 465-492.
62. Izosimov, D.B., Matic, B., Utkin, V.I. and Sabanovic, A., 1978, Using sliding modes in control of electric motors, Doklady AN SSSR vol. 142, no. 4, pp. 769-772.
63. Kaynak, O. Harashima, F. and Hashimoto, H., 1984, Variable structure systems theory applied to sub-time optimal position control with an invariant trajectory, Transactions IEE of Japan, vol. 104, no. 3/4, pp. 47-51.
64. Sira-Ramizer, H., 1988, Sliding mode control on slow manifolds of DC-to-DC converters, International Journal of Control, vol. 47, no. 5, pp. 1323-1340.
65. Fu, L.C., 1991, A robust model reference adaptive control using variable structure adaptation for a class of plants, International Journal of Control, vol. 53, pp. 1359-1375.
66. Sira-Ramizer, H., 1993, A dynamical variable structure control strategy in asymptotic tracking problem, IEEE Transactions on Automatic Control, vol. 38, pp. 615-620.
67. Elmali, H. and Olgac, N., 1993, Tracking nonlinear nonminimum phase systems using sliding control, International Journal of Control, vol. 57, no. 5, pp. 1141-1158
68. Itkis, U., 1976, Control Systems of Variable Structure, New York: Wiley.
69. Drazanovic, B., 1969, The invariance conditions in variable structure systems, Automatica, vol. 5, no. 3, pp. 287-295
70. Zinober, A.S.I., El-Ghezavi, O.M.E. and Billings, S.A., 1982, Multivariable variable structure adaptive model-following control systems, Proceedings of the IEE, Part D, vol. 129, pp. 6-12.
71. Walcott, B. L. and Zak, S.H., !988, Combined observer/controller synthesis for uncertain dynamical systems with applications, IEEE Transactions on Systems, Man and Cybernetics, vol. SMC-18, no. 1, pp. 88-104.

Published by WSEAS Press
www.wseas.org
ISBN: 978-960-474-050-5
ISSN: 1790-5117

72. White, B.A., 1983, Reduced-order switching functions in variable structure systems, Proceedings of the IEE, Part D, no. 2, pp.33-40.
73. El-Ghezavi, O.M.E, Billings, S.A., and Zinober, A.S.I., 1983, Variable structure systems and system zeros, Proceedings of the IEE, Part D, vol. 130, no. 1, pp. 1-5.
74. El-Ghezavi, O.M.E, Zinober, A.S.I., and Billings, S.A., 1983, Analysis and design of variable structure systems using a geometric approach, International Journal of Control, vol. 38, no. 3, pp. 657-671.
75. Ercshler, J., Roubellat, F. and Vernhes, J.P., 1974, Automation of a hydroelectric power station using variable structure control systems, Automatica, vol. 10, pp. 31-36. Pergamon-Press.
76. Hikaita, H., 1988, Servomechanisms based on sliding mode control, International Journal of Control, vol. 48, no. 2, 435-447.
77. Cheres, E., 1989, Design of min-max controller with predscribed sliding motion, International Journal of Systems Science, vol. 20, no. 12. pp. 2483-2493.
78. Spurgeon, S.K., 1991, Choice of discontinuous control component for robust sliding mode performance. International Journal of Control, vol. 53, pp. 163-179.
79. Gutman, S., 1979, Uncertain dynamical systems-A Lyapunov min-max approach. IEEE Transactions on Automatic Control, vol. 24, pp. 437-443.
80. Ryan,E.P., 1983, A variable structure approach to feedback regulation of uncertain dynamical systems, International Journal of Control, vol. 38, no. 6, pp. 1121-1134.
81. Dorling, C.M., and Zinober, A.S.I, 1986, Two approaches to the hyper plane design in multivariable structure control systems. International Journal of Control, vol. 44, pp. 65-82.
82. Dorling, C.M., and Zinober, A.S.I, 1988, Robust hyperplane design in multivariable structure control systems. International Journal of Control, vol. 48, no. 5, pp. 2043-2054.
83. Woodham, C.A., and Zinober, A.S.I, 1993, Eigenvalue placement in a specified sector for variable structure control systems. International Journal of Control, vol. 57, no. 5, pp. 1021-1037.
84. Hong, G.-M., and Wu, Y-C., 1989, Formation of sliding regime with uncertain plant parameters. International Journal of Systems Science, vol. 20, pp. 2291-2297.
85. Hong, G.-M., and Wu, Y-C., 1989, Formation of sliding regime for a nonlinear plant. International Journal of Systems Science, vol. 20, no. 11, pp. 2299-2305..
86. Zhou, F. and Fisher, D.G., 1992, Continuous sliding mode control, International Journal of Control, vol. 55, no. 2, pp. 313-327.
87. Slotine, J.J.E., Hedrick, J.K. and Misawa, E.A., 1987, On sliding observers for non-linear systems, Transactions of the ASME Journal of Dynamic Systems, Measurement and Control, vol. 122, no. 3, pp. 245-252.
88. Slotine, J.J.E. and Li, W., 1991, Applied Nonlinear Control, (Prentice Hall, Englewood Cliffs).
89. Hung, J.Y., Gao, W.B. and Hung J.C., 1993, Variable structure control, A survey IEEE Transactions on Industrial Electronics, vol. 40, no. 1, pp. 2-22.
90. Asada, H., Slotine J.-J. E., 1986, Robot Analysis and Control, New York: John Wiley and Sons.
91. Abdallah, C., Dawson, D., Dorato P., and Jamshidi, M., 1991, Survey of Robust Control for Rigid Robots, IEEE Control Systems Magazine, vol. 11, pp. 24-30.
92. Banks, S.P., 1986, Control Systems Engineering, Prentice Hall, Englewood Cliffs.
93. Gau, W.B., 1990, Fundamentals of Variable Structure Control Theory. Beijing. Press of Sciene and Technology in China (in Chinese).
94. Bartolini, G., 1989, Chattering phenomena in discontinuous control systems, International Journal of Systems Science, vol. 20, no. 12, pp. 2471-2481.
95. Sarpturk, S.Z., Istefanopulos, Y., and Kaynak, O., !987, On the stability of discrete-time sliding mode control systems, IEEE Transactions on Automatic Control, vol. AC-32, no. 10, pp. 930-932.
96. Singh, S.N., 1989,Asymptotically decoupled discontinuous control of systems and nonlinear aircraft maneuver. IEEE Transactions on Aerospace and Electronic Systems, vol. 25, pp. 380-391.
97. Singh, S.N., 1990,Decentralized variable structure control for tracking in nonlinear systems. International Journal of Control, vol. 52, no. 4, pp. 811-831.
98. Slotine, J.J.E., 1984, Sliding controller design for nonlinear systems, International Journal of Control, vol. 40, no. 2, pp. 421-434.

Published by WSEAS Press
www.wseas.org
ISBN: 978-960-474-050-5
ISSN: 1790-5117

99. Vadali, S.R., 1986, Variable structure control of spacecraft control large-angle maneuvers, Journal of Guidance, Control and Dynamics, vol. 9, no. 2, pp. 235-239.
100. Yeung, K. S. and Y.P. Chen, 1988, A new controller design for manipulators using the theory of variable structure systems, IEEE Transactions on Automatic Control, Vol. 33, No.2, pp. 200-206.
101. Ferrara, A., L. Magnani, R. Scattolini, 2002, A globally stabilizing hybrid variable structure control strategy, IEEE Transactions on Automatic Control, Vol. 47, pp. 1334-1337.
102. Chen, X. and Fukuda, T., 1997, Computer-controlled continuous-time variable structure systems with sliding modes, International Journal of Control, vol.67, no.4, pp.619-639.
103. Furuta, K., 1990, Sliding mode control of a discrete system, Systems and Control Letters,vol.14, pp.145-152.
104. Edwards, CH. and Spurgeon, S.K, 1998, Sliding Mode Control: Theory and Applications, London, Taylor and Francis Ltd.
105. Utkin, V., Guldner, J. and Shi, J., 1999, Sliding Mode Control in Electromechanical Systems, London: Taylor and Francis Ltd.
106. Young, K.K.D. (Ed.), 1993, Variable Structure Control for Robotics and Aerospace Applications, Elsevier Science Publishers, Amsterdam.
107. Palm, R., Driancox, D. and Hellendoorm, H., 1997, Model Based Fuzzy Control, Berlin, Springer-Verlag.
108. Zinober, A.S.I. (Ed.), 1994, Variable Structure and Lyapunov Control, London, Springer-Verlag.
109. Zinober, A.S.I. (Ed.), 1990, Deterministic Nonlinear Control, Peter Peregrinos, UK.
110. Flippov, A., 1988, Differential Equations with Discontinuous Right-Hand Sides, Kluwer, Holland, 1988.
111. Young, K.D. and Özgüner, Ü. (Eds.), 1999, Variable Structure Systems: Sliding Mode and Nonlinear Control, Berlin, Springer Verlag.
112. Choi, H.H., 2004, An analysis and design method for uncertain variable structure systems with bounded controllers, IEEE Transactions on Automatic Control, vol. 49, no. 4, pp. 602-607.
113. Spong, M. W. and Vidyasagar, M., 1989, Robot Dynamics and Control, NewYork: John Wiley and Sons.
114. Emelyanov, S.V., Burovoi, I.A. and Levada F.Y., 1998, Control of Indefinite Nonlinear Dynamic Systems: Induced Internal Feedback, London, Springer Verlag.
115. Young, K.D., Utkin, V.I. and Özgüner, Ü., 1999, A control engineers guide to sliding mode control. IEEE Transactions on Control Systems Technology, vol.7, no.3, pp.328-342.
116. Garofalo, F. and Glielmo (Eds), L., 1996, Robust Control via Variable Structure and Lyapunov Techniques. Springer-Verlag, London.
117. Watanabe, K., Fukuda, T. and Tzateftas, S.G., 1992, Sliding mode control and a variable structure system observer as a dual problem for systems with non-linear uncertainities, Int. J. Systems Science , vol.23, no.11, pp.1991-2001.
118. Parlakci, M.N.A., Jafarov, E.M., and Istefanopulos, Y., 2004, New variable structure PD-controllers design for robot manipulators with parameter perturbations, International Journal of Robotics and Automation, vol. 19, no. 3, pp. 134-142.
119. Jafarov, E.M., Parlakci, M.N.A., and Istefanopulos, Y., 2005, A new variable structure PID-controllers design for robot manipulators, IEEE Transactions on Control Systems Technology, vol. 13, no. 1, pp. 122-130.
120. Calise A.J., Kramer, F.S., 1984. A variable structure approach to robust control of VTOL aircraft, International Journal of Guidance, Control and Dynamics, vol. 7, no. 5, pp. 620-626.
121. Esfandiari, F., and Khalil, H.K., 1991, Stability analysis of a continuous implementation of variable structure control. IEEE Transaction on Automatic Control, vol.36, no.5, pp. 616-620.
122. Khalil, H.K., 2002, Nonlinear Systems, 3.rd Edition, New Jersey, Prentice Hall.
123. Oh, S. and Khalil, K.H., 1995, Output feedback stabilization using variable structure control, International Journal of Control, vol. 62, pp. 831-848.
124. Jafarov, E.M., and Tasaltin, R., 1998, Robust sliding mode flight control systems for the uncertain MIMO aircraft model F-18. Proceedings of the 2nd Ankara International Aerospace Conference, AIA'98, Middle East Technical University, Ankara, Turkey, pp. 197-199.
125. Jafarov, E.M., and Tasaltin, R., 1999, Design of longitudinal variable structure control systems for the F-18 aircraft model with parameter perturbations, In Proceedings of the 1999 IEEE

Published by WSEAS Press
www.wseas.org
ISBN: 978-960-474-050-5
ISSN: 1790-5117

International Conference on Control Applications and IEEE International Symposium on Computer Aided Control System Design, August 22-26, Kohala Coast, Island of Hawaii, Hawaii, SA, pp. 607-612.
126. Jafarov, E.M., and Tasaltin, R., 2000, Robust slidind-mode control for the uncertain MIMO aircraft model F-18, IEEE Transactions on Aerospace and Electronic Systems, pp. 1127-1141.
127. Perruquetti, W., and Barbot, J.P., 2002, Sliding Mode Control in Engineering, Marcel Dekker, New York.
128. Ha, Q.P., Rye, D.C. and Durrant-Whyte, H.F., 1999, Robust sliding mode control with application. International Journal of Control, vol. 72, no. 12, pp. 1087-1096.
129. Sage, H. G., De Mathelin M. F. and Ostertag, E., 1999, Robust control of robot manipulators: A survey, International Journal of Control, vol.72, no.16, pp.1498-1522.
130. Lewis, F.L., Dawson, D.M. and Abdallah, C.T., 2004, Robot Manipulator Control: Theory and Practice, New York, Marcel Dekker.
131. Bailey, E., and Arapostathis, A., 1987, A simple sliding mode scheme applied to robot manipulators, International Journal of Control, vol.45, no.4, pp.1197-1209.
132. Stepanenko, Y., and Su, C.Y., 1993, Variable structure control of robot manipulators with nonlinear sliding manifolds, International Journal of Control, vol.58, pp.285-300.
133. Su, C. Y. and Stepanenko, Y., 1999, Adaptive variable structure set-point control of underactuated robots, IEEE Transactions on Automatic Control, vol.44, no.11.
134. Zhihong, M., and Palaniswami, M., 1994, Robust tracking control for rigid robotic manipulators, IEEE Transactions on Automatic Control, vol.39, no.1, pp.154-159.
135. Parlakci, M. N. A., Jafarov, E., Istefanopulos, Y. and Belegradek, O., 2001, A novel design of robust relay-discontinuous sliding mode controller for robot manipulators with parameter perturbations, Proc. European Control Conference, pp.968-974.
136. Istefanopulos, Y., Jafarov, E. and Parlakci, M. N. A., 2001, A new variable structure-pd controller for robot manipulators with parameter perturbations, Proc. IASTED International Conference on Robotics and Applications, pp.163-168.
137. Sabanovic, A., Fridman, L. M., and Spurgeon, S. (Eds.), 2004, Variable Structure Systems: From Principles to Implementation, The IEE, London.
138. Sciavicco, L. and Siciliano, B., 1996, Modelling and Control of Robot Manipulators, The McGraw-Hill Companies, New York.
139. Choi, H.H., 1997, A new method for variable structure control systems design: A linear matrix inequality approach, Automatica, vol. 33, no. 11, pp. 2089-2092.
140. Choi, H.H., 2002, Variable structure output feedback control design for a class of uncertain dynamical systems, Automatica, vol. 38, pp. 335-341.
141. Singh, S. N., Steinberg, M. L., and Page A. B., 2003, Nonlinear adaptive and sliding-mode flight path control of F/A-18 model, IEEE Transactions on Aerospace and Electronic Systems, vol.39, no.4, pp.1250-1262.
142. Yeh, F. K., Chien, H. H., and Fu, L. C., 2003, Design of optimal midcourse guidance sliding-mode control for missiles with TVC, IEEE Transactions on Aerospace and Electronic Systems, vol. 39, no.3, pp.824-837.
143. Jerouane, M., Sepehri, N. and Lamnabhi-Lagarrigue, F., 2004, Dynamic analysis of variable structure force control of hydraulic actuators via the reaching law approach, International Journal of Control, vol. 77, no. 14, pp. 1260-1268.
144. Dodds, S.J. and Walker, A.B., 1991, Sliding mode control system for the three-axis attitude control of rigid body spacecraft with unknown dynamics parameters, International Journal of Control, vol.54, no.4, pp.737-761.
145. Fu, K.S., Gonzales, R.C. and Lee C.S.G., 1987, Robotics: Control, Vision and Intelligence, New York, McGraw-Hill.
146. Fossard, A.J., 1993, Helicopter control law based on sliding mode with model following, International Journal of Control, vol.57, no.5, pp.1221-1235.
147. Shtessel, Y.B., 1998, Sliding mode control of the space nuclear reactor system, IEEE Transactions on Aerospace and Electronic Systems, vol.34, no.2, pp.579-589.

Published by WSEAS Press
www.wseas.org
ISBN: 978-960-474-050-5
ISSN: 1790-5117

148. Dzhafarov-Jafarov, E.M. and Iskenderov, I.A., 1980, Synthesis of variable structure systems, for position stabilization of a class of moving plants(offshore platform). Izv. VUZ SSSR. Elektromekanika, no.5, pp. 522-526.
149. Parlakci, M.N.A., Jafarov, E.M., and Istefanopulos, Y., 2003, Robust position and tracking variable structure PD-controllers design methods for robot manipulators with parameter perturbations, WSEAS Transactions on Systems, Issue 4, vol.2, pp.771-779.
150. Levine, W.S. (Ed), 1996, The Control Handbook, Taylor and Francis, London.
151. Er, M.J., Zribi, M., Lee K.L. and Mastorakis, N.E., 1998, Variable Structure Control of an Overhead Crane, Recent Advances in Circuits and Systems, World Scientific Publishing Company, pp.115-120.
152. Yu, X. and Chen, G., 2003, Discretization behaviours of equivalent control based variable structure systems, IEEE Trans. Automatic Control, vol. 48, no. 9, pp. 1641-1646.
153. Yu, X., and Yu, S., 2000, Discrete sliding mode control with invariant sliding sectors, ASME Journal of Dynamic Systems, Measurement and Control, Special Issue on Variable Structure Systems, vol. 122, no. 4, pp. 776-782.
154. Chinaev, P.I, Dzhafarov-Jafarov, E.M. and Iskendereov, I.A., 1979, Optimization of multiconnected systems with variable structure, Kibernetika i Vychislitelnaya Teknika , issue 43, pp. 16-25.
155. International Journal of Control, 1993, Special Issue on Sliding Mode Control, Guest Editor: Utkin, V. I., vol.57, no.5.
156. Transactions of The ASME, Journal of Dynamic Systems, Measurement, and Control, Special Issue on Variable Structure Systems, Ulsoy, A. G., Misawa, E. A. and Utkin V. (Eds.), 2000, vol. 122, no. 4.
157. International Journal of Control, 2003, Special Issue: Dedicated to Vadim Utkin on the Occasion of his 65th Birthday. Guest Editor: Fridman, L. M., Editor: Rogers, E., vol. 76, no. 9-10.
158. IEEE International 7.th Workshop on Variable Structure Systems, VSS'02, 17-19 July 2002, Sarajevo, Bosnia Herzegovina, Proceedings, Editor Asif Sabanovic.
159. IEEE International 8.th Workshop on Variable Structure Systems, VSS'04, 6-8 September 2004, Vilanova, Spain, Proceedings, Editor Enric Fossas Colet.
160. Shyu, K.K., and Yan, J.J., 1993, Robust stability of uncertain time-delay system and its stabilization by variable structure control. International Journal of Control, vol. 57, pp. 237-246.
161. Luo, N. and De La Sen, M, 1993, State feedback sliding mode control of a class of uncertain time-delay systems. Proceedings of IEE-D: Control Theory and Applications, vol. 140, no. 4, pp. 261-274.
162. Luo, N., De La Sen, M, and Rodellar, J., 1997, Robust stabilization of a class of uncertain time-delay systems in sliding mode. International Journal Robust and Nonlinear Control. vol.7, pp. 59-74.
163. Koshkouei, A.J., and Zinober, A.S.I., 1996, Sliding mode time-delay systems. Proceedings of the IEEE International Workshop on Variable Structure Systems, VSS'96, Tokyo, IEEE, pp. 97-101.
164. Krasovskii, N.N., 1956, On asymptotical stability of system with time-delay, Prikladnaya Mathematika I Mekhanika, vol.20, issue 3.
165. Krasovskii, N.N., 1959, Some Problems of Stability of Motion, Moscow, Phusmatgiz (in Russian); 1963, Stability of Motion: Application of Lyapunov's Second Method to Differential Systems and Equations with Time-Delay, Stanford, SU Press.
166. Jafarov-Dzhafarov, E.M, 1980, Study of the stability of VSS with time-delay. Novel Approaches in the Theory of VSS. Emelyanov, S.V. (Ed.), Proceedings of VNIISI AN SSSR, 4, Moscow, pp. 24-28 (in Russian).
167. Jafarov, E.M., 1998, State feedback sliding mode control for SISO systems with time-delay. Proceedings of IFAC 8th Symposium on Large Scale Systems: Theory and Applications, University of Patras, Rio, Greece pp.195-200.
168. Nazaroff, G. J., 1973, Stability and stabilization of linear differential delay systems. IEEE Transactions on Automatic Control, vol. 18, pp. 317-318.
169. Li, X. and Decarlo, R.A., 2001, Memoryless sliding mode control of uncertain time-delay systems. In Proc. of 2001 American Control Conference, Crystal Gateway Marriot, Arlington, Virginia, June 25-27.

Published by WSEAS Press
www.wseas.org
ISBN: 978-960-474-050-5
ISSN: 1790-5117

170. Li, X. and Decarlo, R.A., 2003, Robust sliding mode control of uncertain systems, International Journal of Control, vol. 76, no. 13, pp.1296-1305.
171. Richard, J.P., Gouaisbaut, F, and Perruquetti, W., 2001, Sliding mode control in the presence of delay, Kibernetica, vol.37, pp. 277-294.
172. Gouaisbaut, F., Dambrine, M., and Richard, J.P., 2002, Robust control of delay systems: a sliding mode control design via LMI, ELSEVIER, Systems and Control Letters, vol. 46, pp. 219-230
173. Yan, J.J., 2003, Sliding mode control design for uncertain time-delay systems subjected to a class of nonlinear inputs, International Journal of Robust and Nonlinear control, vol. 13, pp.519-532.
174. Richard, J.P, 2003, Time-delay systems: an overview of some recent advances and open problems, Automatica, vol. 39, pp. 1667-1694.
175. Jafarov, E.M., 2001, Comparative analysis of simple improved delay dependent stability criterions for linear time-delay systems: An augmented functional approach, Proceedings of the American Control Conference, vol.5, pp. 3389-3394.
176. Jafarov, E. M., 2003, Delay-dependent stability and α-stability criterions for linear time-delay systems, WSEAS Transactions on Systems, iss.4, vol.2, pp.1138-1147.
177. Cheres, E. Gutman, S., and Palmor, Z.J., 1989 Stabilization of uncertain dynamic systems including state delay. IEEE Transactions on Automatic Control, vol. 34, pp. 1199-1203.
178. Razumikhin, B. S., 1956, On stability of system with time-delay, Prikladnaya Mathematika I Mekhanika, vol.20, issue 3.
179. Hale, J., 1977, Theory of Functional Equations, New York, Springer-Verlag.
180. Dzhafarov-Jafarov, E.M., 1978, Stability of multidimensional vriable structure systems with time-delay, Doklady AN, Azerbaijan SSR, no.10, pp.24-27.
181. Jafarov-Dzhafarov, E.M, 1980, Stability analysis of VSS with time-delay. Novel Trends in the Theory of VSS. Emelyanov, S.V. (Ed.), Proceedings of VNIISI AN SSSR, issue 4, Moscow, pp. 28-30 (in Russian).
182. Dzhafarov-Jafarov, E.M., 1987, Theoritical basis and design principles of multi dimensional VSS with time-delay, Preprints of 7.th International Conference on Control Systems and Computer Science, Plenary Session, Bucharest Polytechnical Institute of Bucharest, Department of Control and Computers, 27-30 May, 1987, vol.1, pp.1-8.
183. Dzhafarov-Jafarov, E.M., 2001, Synthesis of variable structure systems with time-delay, Journal of Automation and Information Sciences (Avtomatica) vol.33, no5-8, pp.1-9.
184. Jafarov, E.M. and Kalyon, M., 1997, Design of relay and variable structure observers for multi-input multi-output systems with time-lag, Proceedings of IAAA International Symposium on Intelligence Control, pp.355-360.
185. Smith, O.J.M, 1957, Closer control of loops with dead time. Chemical Engineering Progress, vol. 53, pp.217-219.
186. Smith, O.J.M, 1958, Feedback Control Systems, New York: McGraw-Hill.
187. Marshall, J. E., 1974, Extensions of O. J. Smith's method to digital and other systems., vol. 19, no. 5 pp. 933-939.
188. Aleviskas, G. and Seborg D.E., 1973, An extension of the Smith Predictor method to multivariable linear systems containing time delays. International Journal of Control vol. 3., no. 17, pp. 541-551
189. Watanabe, K., and Ito, M., 1984, A process-model control for the linear systems with delay. IEEE Transactions on Automatic Control, vol. AC-26, no. 6, pp. 1261-1269
190. Watanabe, K., Ishiyama Y., and Ito, M., 1983, Modified Smith Predictor control for the multivariable systems with delays and unmeasurable step disturbances. International Journal of Control, vol. 37, no. 5, pp.959-973.
191. Al-Sunni, F.M. and Al-Nemer, T.M, 1997, A Smith Predictor FL-based controller for processes with long dead time. International Journal of Control, vol. 28, no. 12, pp. 1251-1258.
192. Majhi, S., and Atherton, D. P, 1999, Modified Smith predictor and controller for processes with time-delay. IEE Proceedings Control Theory and Applications, vol. 146, No. 5, pp. 359-366.
193. Hagglund, T., 1996, An industrial dead-time compensating PI controller. Control Engineering Practice, vol. 4, no. 6, pp. 749-756.
194. De Paor, A.M., 1985, A modified Smith predictor and controller for unstable processes with time delay. International Journal of Control, vol. 41, no. 4, pp. 1025-1036.

Published by WSEAS Press
www.wseas.org
ISBN: 978-960-474-050-5
ISSN: 1790-5117

195. Kwon, W. H., and Pearson, A. E., 1980, Feedback stabilization of linear systems with delayed control. IEEE Transactions on Automatic Control, vol. AC-75, no. 2, pp. 266-269.
196. Artstein, Z., 1982, Linear systems with delayed controls: A reduction. IEEE Transactions on Automatic Control, vol. AC-27, no 4, pp.869-879.
197. Moon, Y.S., Park, P.G., and Kwon, W.H., 2001, Robust stabilization of uncertain input-delayed systems using reduction method. Automatica, 37, pp. 307-312.
198. Choi, H. H, and Chung, M. J., 1995, Memoryless stabilization of uncertain dynamic systems with time-varying delayed states and control. Automatica, 31, pp. 1349-1351.
199. Kim, J.H., Jeung, E.T., and Park H.B., 1996, Robust control for parameter uncertain delay systems in state and control input. Automatica, vol. 32, no. 9, pp. 1337-1339.
200. Su, H., Chu, J. and Wang, J., 1998, A memoryless robust stabilizing controller for a class of uncertain linear time-delay systems. International Journal of Systems Science, vol. 29, no. 2, pp.191-197.
201. Kolmanovski, V.B. and Nosov, V.R., 1986, Stability of Functional Differential Equation, New York, Academic Press.
202. Elsgolts, L. E. and Norkin, S. B., 1971, Introduction to the Theory of Differential Equations with Deviating Arguments, Moscow, Nauka (in Russian).
203. Rezvan, B., 1983, Absolute Stability of Automatic Systems with Time-Delay, Moscow, Nauka (in Russian).
204. Gorecki, H., Fuksa, S., Gabrovski, P. and Korytovski, A., 1989, Analysis and Synthesis of Time-Delay Systems, John Wiley and Sons (PWN), Warszawa, Polland.
205. Marshall J. E., Goreki, H., Walton, K. and Korytowski, A., 1992, Time-Delay Systems: Stability and Performance Criteria with Applications, England, Ellis Horwood.
206. Dugard, L. and Verriest, E. I., 1998, Stability and Control of Time-Delay Systems, London, Springer-Verlag.
207. Wang, Q.G., Lee, T.H. and Tan, K.K., 1999, Finite Spectrum Assignment for Time-Delay Systems, London, Springer-Verlag.
208. Mac Donald, N., 1989, Biological Delay Systems: Linear Stability Theory, Cambridge, UK, Cambridge University Press.
209. Fridman, E., and Shaked, U., 2003, Delay-dependent stability and H_∞ control: constant and time-varying delays, International Journal of Control, vol.76, no.1, pp.48-60.
210. Jafarov, E.M, 1990, "Analysis and synthesis of multi-dimensional VSS with delays in sliding modes", in Proceedings of 11th IFAC World Congress, Tallin, vol. 66, pp.46-49.
211. Jafarov, E.M. (1999). Robust sliding mode observer for uncertain MIMO systems with time-delay. In Proc. of the IASTED International Conference Control and Applications, Banff, Canada, pp.572-577.
212. Jafarov, E.M, 2000, "Design of sliding mode control for multi-input systems with multiple state delays", in Proceedings of 2000 American Control Conference, The Hyatt Regency Hotel, Chicago, Illinois, USA, June 28-30, pp. 1139-1143.
213. Jafarov, E. M., 2003, "Robust sliding mode control of multivariable time-delay systems", Systems Science Journal, vol.29, no.3, pp.17-36.
214. Jafarov, E.M., 2003, Robust sliding mode controller of multivariable time-delay systems, Proc. 16th Int. Conference on Systems Engineering, ICSE'2003, Coventry Univ. UK, 5-11 September, pp.288-296.
215. Jafarov, E.M., 2005, Robust sliding mode controllers design techniques for stabilization of multivariable time-delay systems with parameter perturbations and external disturbances, International Journal of Systems Science, vol. 36, no. 7, pp. 433-444.
216. Niculescu, S. I., and Gu, K., 2004, Advances in Time-Delay Systems, Springer-Verlag, Berlin.
217. Niculescu, S. I., 2001, Delay Effects on Stability, Springer-Verlag, London.
218. Mahmoud, M. S., 2000, Robust Control and Filtering for Time-Delay Systems, Marcel Dekker, New York.
219. Gu, K., Kharitonov, V. L., and Chen, J., 2003, Stability of Time-Delay Systems, Birkhauser, Boston.

Published by WSEAS Press
www.wseas.org
ISBN: 978-960-474-050-5
ISSN: 1790-5117

220. Boukas, E. K., and Liu, Z. K., 2002, Deterministic and Stochastic Time Delay Systems, Birkhauser, Boston.
221. Kharitonov, V.L., and Niculescu, S.I, 2003, On the stability of linear systems with uncertain delay, IEEE Transactions on Automatic Control, vol. 18, no. 1, pp. 127-132.
222. Zhang, X, Knospe, C.R., and Tsiotras, P, 2002, Stability analysis of LPV time-delayed systems, International Journal of Control, vol. 75, no. 7, pp. 538-558.
223. Zhang, J, Knospe, C.R., and Tsiotras, P, 2003, New results for the analysis of linear systems with time-invariant delays, International Journal of Robust and Nonlinear Control, vol 13, pp.1149-1175.
224. Tian, Y.P. , Yang, H.Y., 2004, Stability of internet congestion control with diverse delays, Automatica, In Press, Corrected Proof, Available online 11 May 2004, 9 pages.
225. Xu, S., and Lam, J., 2005, Improved delay-dependent stability criteria for time-delay systems, IEEE Transactions on Automatic Control, vol.50, no.3, pp.384-387.
226. Mahmoud, M. S., and Ismail, A., 2005, New results on delay-dependent control of time-delay systems, IEEE Transactions on Automatic Control, vol.50, no.1, pp.95-100.
227. Rhodes, C., and Morari, M., 1996. Determining controllable sets from a time-delay description. IFAC World Congress, San Francisco, USA, pp. 13-18.
228. Su., H., Ji, X., and Chu, J., 2005, New results of robust quadratically stabilizing control for uncertain linear time-delay systems, International Journal of Systems Science, vol.36, no.1, pp.27-37.
229. Wu, M., He, Y., She, J. H., and Liu, G. P., 2004, Delay-dependent criteria for robust stability of time-varying delay systems, Elsevier, Automatica, vol.40, pp.1435-1439.
230. Kim, J. H., 2001, Delay and its time-derivative dependent robust stability of time-delayed linear systems with uncertainty, IEEE Transactions on Automatic Control, vol.46, no.5, pp.789-792.
231. Mahmoud, M.S., and Al-Muthairi, N., 1994, Design of robust controllers for time-delay systems. IEEE Transactions on Automatic Control, vol. 39, pp. 995- 999.
232. Fiagbedzi, Y.A., and Pearson, A.E.,1986, Feedback stabilization of linear autonomous time lag systems. IEEE Transactions on Automatic Control, AC-31, pp. 847-855.
233. Moon, Y.S., Park, P., Kwon, W.H. and Lee, Y.S., 2001, Delay-dependent robust stabilization of uncertain state-delayed systems. International Journal of Control, vol. 74, no. 14, pp. 1447-1455.
234. Olgac, N. and Sipahi, R., 2002, An exact method for the stability analysis of time-delayed LTI systems, IEEE Transactions on Automatic Control, vol.47, pp.793-797.
235. Zheng, F., Cheng, M. and Gao, W. B., 1993, "Variable structure control of systems with delays in control", Control and Decision, vol. 8, no.2, pp.95-100. (in Chinese).
236. Hu, K.J, Basker, V. R. and O. D. Crisalle, 1998, "Sliding mode control of uncertain input delay systems", in Proceedings of the 1998 American Control Conference, Philadelphia, Pennsylvania USA, vol.1, pp. 564-568.
237. Jing, H.J., Tan, D.L. and Wang, Y.C., 2004, An LMI approach to stability of systems with severe time-delay. IEEE Transactions on Automatic Control, vol.49, no.7, pp. 1192-1195.
238. Wang, Z. and Unbehauen, H., 2000, Nonlinear observers for a class of continuous-time uncertain state-delayed systems. International Journal of Systems Science, vol. 31, no. 5, pp. 555-562.
239. Cao, Y. Y., and Sun, Y. X., 1998, "Robust stabilization of uncertain systems with time-varying multistate delay", IEEE Transactions on Automatic Control, vol.43, No 10, pp. 1484-1488.
240. Kim, K. S., Park, Y. and Oh S.H., 2000, "Designing robust sliding hyperplanes for parametric uncertain systems: a Riccati approach", Automatica, vol.36, pp.1041-1048.

Published by WSEAS Press
www.wseas.org
ISBN: 978-960-474-050-5
ISSN: 1790-5117

Contents

Published by WSEAS Press
www.wseas.org
ISBN: 978-960-474-050-5
ISSN: 1790-5117

Published by WSEAS Press
www.wseas.org
ISBN: 978-960-474-050-5
ISSN: 1790-5117

Published by WSEAS Press
www.wseas.org
ISBN: 978-960-474-050-5
ISSN: 1790-5117

Published by WSEAS Press
www.wseas.org
ISBN: 978-960-474-050-5
ISSN: 1790-5117

CHAPTER 1

Robust Linear and Variable Structure Control of Multi-Input Uncertain Systems

1.1 Introduction

In this chapter, two types of very simple robust full state feedback controllers: 1) combined linear and 2) combined variable structure controllers design techniques for stabilization of multi-input linear dynamical systems with matched/mismatched but available upper norm-bounded unknown parameter uncertainties subject to matched but upper norm-bounded external disturbances are advanced. The conventional equivalent control term is not used in second controller because equivalent control term needs to use the matching conditions and unavailable parameter uncertainties. The robust global asymptotical stability, β-stability and sliding conditions are parametrically obtained by using Lyapunov V-function method and systematically formulated in terms of some matrix equations. The robust controllers computational algorithms are presented. By these algorithms stability conditions can be reduced to standard algebraic Riccatti equation (ARE) problem. Two design examples with simulation results for jet fighter F-16 are given to illustrate the usefulness of the obtained results.

1.2 Brief review of robust systems

Recently, much attention has been paid to the design problem of robust state feedback controllers for stabilization of linear dynamical system with norm-bounded parameter uncertainties via Lyapunov variable structure control design because of their robustness to the matched parameter perturbations and external disturbances (for example, Garofalo and Glielmo, 1996 [1]). There are two basic design approaches: 1) conventional linear state feedback and 2) Lyapunov min-max or variable structure controllers design approaches.

Robust linear continuous and discontinuous Lyapunov quadratic controllers' design for linear uncertain systems with external disturbances has been considered by (Corless, 1994 [2]). Quadratic stability and β-stability conditions are formulated in terms of algebraic Riccati equations combined with LMI's techniques. Robust memoryless linear state feedback controllers design for stabilization of time-delay systems with matched parameter uncertainties have been successfully designed for example by (Mahmoud and Al-Muthairi 1994 [3], Cao and Sun 1998 [4]), etc. Global stability conditions are formulated in terms of matrix norm and algebraic Riccati inequalities. Riccati equation approach is used in designing of robust linear controllers for uncertain systems by (Petersen and Hollot, 1986 [5], and Shen, Chen and Kung, 1991 [6]).

There is a large number of types of variable structure controllers in literature: variable structure control (Emelyanov, 1967 [7]); equivalent control, VSC+relay term (Utkin, 1977 [8]; Utkin, Guldner and Shi, 1999 [9]; Sabanovic, Fridman and Spurgeon, 2004 [10]); VSC, min-max, relay term, equivalent control and their combinations (DeCarlo, Zak and Matthews, 1987 [11]); VSC, relay, equivalent control, reaching law method (Hung, Gao and Hung, 1993 [12]); VSC, relay, min-max, equivalent term (Spurgeon, 1991 [13]; Edwards and Spurgeon, 1998 [14]); equivalent term+VSC (Hong and Wu, 1989 [15]); min-max, equivalent term, relay, VSC (Dorling and Zinober, 1986 [16]; Koshkouei and Zinofer, 2004 [17]); continuous sliding mode control (Zhou and Fisher, 1992 [18]); nominal equivalent term+switching function+min-max term (Yoo and Chung, 1992 [19]); equivalent control+unit vector term (Zinober, 1994 [20]); VSC, min-max (Jafarov and Tasaltin, 2000 [21]); integral sliding mode controller (Jafarov and Tasaltin, 2001 [22]); PD-variable structure controller (Jafarov, 2003 [23]); PID-variable structure controller with PID sliding surface (Jafarov, Parlakci and

Published by WSEAS Press
www.wseas.org
ISBN: 978-960-474-050-5
ISSN: 1790-5117

Istefanopulos 2005 [24]); three mixed terms: linear state control+switching function+variable structure term controller, for multivariable canonical systems with mismatched uncertainty in the state matrix (Kim, Park and Oh, 2000) [25]; two terms switching function+min-max output controller for regular form multi variable systems with lumped uncertainty (Choi, 2002 [26]); three terms switching function+equivalent control+min-max state controller (Choi, 1997 [27]), mixed VSC for multivariable canonical uncertain systems (Choi 2001 [28]), various types of sliding mode state and output feedback controllers (Edwards and Spurgeon, 1998 [14]; Edwards, Spurgeon and Hebden, 2003 [29]; Perruquetti and Barbot, 2002 [30]; Journals special issues [31] and [32]); flight path controller (Singh, Steinberg and Page, 2003 [33]); missile-gudiance sliding mode controller (Yeh, Chien and Fu, 2003 [34]); variable structure force controller (Jerouane, Sepehri and Lamnabhi-Lagarrigue, 2004 [35]) etc. A new class of variable structure controllers known as the min-max controllers has been introduced by (Gutman, 1979 [36]). Asymptotic stability in sense of Lyapunov is analyzed via generalized dynamical systems. (Cheres, 1989 [37]) has successfully designed the min-max controller with prescribed sliding motion for systems with lumped uncertainties. The basic difference between min-max controller and the variable structure controller is their design method. The VSC has been design to stabilize the system via a prescribed sliding mode, whereas the min-max control has designed via the second method of Lyapunov and the concept of generalized dynamical systems. As shown by (Gutman, 1979 [36]) since a min-max is in general simpler then a VSC one it seems reasonable to obtain a min-max design for VSC. The design of sliding mode controller for nominal systems may need to an unpredictable behavior of the closed-loop in the case of mismatching disturbances. Taking this mismatching into account the sliding surface is designed by (Takahashi and Peres, 1999 [38]) via the minimization of a quadratic performance criterion in the regular form. But, sliding and stability conditions are not considered and controller is not designed. An LMI-based switching surface design for canonical multivariable systems with mismatched uncertainties in the state matrix is developed and a new invariance condition is derived by (Choi, 2003 [39]). Two new combined variable structure and norm-bounded relay controllers design methods for the stabilization of matched/mismatched uncertain systems with external disturbances are developed by (Choi, 1997 [27], 2002 [26] and 2004 [40]). The sliding, stability, β-stability and ultimately boundedness conditions are formulated in terms of LMI's techniques. Equivalent control term depending on unknown parameter uncertainties and external disturbances can be defined according to (Utkin, 1977 [8]) and using by (Ryan, 1983 [41]); (Spurgeon, 1991 [13]); (Zinober, 1994 [20]); (Hung, Gao and Hung, 1993 [12]). When so-called matching conditions (Drazenovic, 1969 [42]; Utkin, 1977 [8]) are satisfied that the sliding mode is invariant to the parameter perturbations and external disturbances. The physical meaning of matching conditions is that all modeling uncertainties and external disturbances enter the system through the control channel (Hung, Gao and Hung, 1993 [12]). But clearly that the equivalent control cannot be synthesized explicitly as it involves the unavailable unknown functions (Ryan, 1983 [41]). Robust optimal combined variable structure controller with novel sliding surface including the nominal dynamics for multivariable uncertain systems with external disturbances is considered by (Park and Ahn, 1999 [43]). However, combined controller consists of seven terms, therefore it is complicated. Stability analysis in large is not investigated. Another robust sliding mode control with application for uncertain multivariable non-linear systems with external disturbances is considered by (Ha, Rye and Durrant-Whyte, 1999 [44]). Proposed three terms controller consists of equivalent term, robust term and fuzzy term. Stability analysis in large is not investigated. Chen and Fukuda type of combined sliding mode controller (Chen and Fkuda 1997 [45]) consists of three terms which is designed for stabilization of continuous canonical form of single input systems. Existence conditions of sliding mode is derived. Recently, some special journal issues [31] and [32] are devoted to various aspects of sliding mode control. Some new theoretical and practical results are summarized in these references.

However, as pointed by (Utkin, 1992) [46], it should be remembered that as rule the original system equations are given with respect to variables characterizing physical processes in individual system elements rather than to canonical variables, which implies that the system behavior is described in terms of a general state space equation. For this reason, above mentioned controller design techniques developed for transformed canonical systems in regular form may be unacceptable to original not transformed full state systems. Moreover, the following comments can be pointed for our purposes. VSC in (Choi, 1997 [27]) is relatively complicated and designed system for mismatching case is only

Published by WSEAS Press
www.wseas.org
ISBN: 978-960-474-050-5
ISSN: 1790-5117

uniformly ultimately bounded. The original system in (Kim, Park, Oh, 2002 [25]) is transformed to canonical form, but controller is described in terms of old and new variables. Coupling stability analysis in large with respect to new variables is not investigated. Norm boundedness conditions for ξ_1 involve unknown parameters. Output variable structure controller, designed by (Choi, 2002 [26]), is simple. But stability analysis is given in terms of old and new variables, and in evaluating upper bounds the control terms' norms are going with positive sign. For this reason, upper bounds are increased too much. Mismatched state matrix uncertainty and external disturbances are compensated by the linear term of controller. But, this implies to force a gain constant of linear control term excessively. Indeed, as calculated in example, linear gain 30,481 : 2 = 15,2405 time greater that switching gain.

In this chapter, two types of very simple robust full state feedback controllers: 1) combined linear and 2) combined variable structure controllers design techniques for stabilization of multi-input full state linear dynamical systems with matched/mismatched, but available upper norm-bounded unknown parameter uncertainties subject to matched but upper norm-bounded external disturbances are advanced. The conventional equivalent control term is not used in second controller because equivalent control term needs to use the matching conditions and unavailable parameter uncertainties. In different from existing results robust global asymptotical stability, β-stability and sliding conditions are parametrically obtained by using Lyapunov V-function method and systematically formulated in terms of some matrix equalities. Two design examples with simulation results for jet fighter F-16 are given which show the effectiveness of design procedures

1.3 System description and assumptions

Consider the uncertain multi-input systems with external disturbances descried by the following state equations:

$$\dot{x}(t) = [A + \Delta A(\sigma)]x(t) + [B + \Delta B(\sigma)]u(t) + Df(t) \tag{1.1}$$

where $x(t) \in R^n$ is the measurable current value of the state, $u(t) \in R^m$ is the control input $f(t) \in R^n$ is unknown external disturbance vector but uniformly bounded $\|f(t)\| \le \theta$, where $\|f(t)\|$ is the Euclidean norm vector, $\theta =$ constant, A, B, D are known constant matrices of appropriate dimensions with B of full rank, $\Delta A(\sigma)$, $\Delta B(\sigma)$ represent the bounded uncertainty of the linear portion and the bounded input matrix uncertainty, respectively, $\sigma(t) \in R^P$ is the uncertain element. We shall use W^T, $\lambda(W)$, $\lambda_{\min}(W)$, $\lambda_{\max}(W)$ to denote, respectively, the transpose, eigenvalues, minimum eigenvalues, and maximum eigenvalues of a square matrix W. We let $W > 0$ or $W < 0$ to signify the positive or negative definite matrix W.

Note that, such description of generalized system of type (1) with disturbance input is known very well in literature, for example Iwasaki and Skelton (1994) [47], Cheres (1989) [37], etc. The objective of this work is to develop the robust controller design techniques for the stabilization of uncertain multi-input systems with external disturbances.

To achieve this goal we design two types of robust combined linear and variable structure controllers. Using Lyapunov V-function method we derive new global robust stability and sliding conditions, which are formulated in terms of algebraic Riccati equations.

Now, we make following conventional assumptions.

Assumption 1: There exist some bounded matrix functions ($m \times n$)- $H(\sigma)$, ($m \times m$)- $E(\sigma) > 0$, ($m \times n$)- F, such that for all uncertain elements the following conventional matching conditions (Drazenovic 1969 [42], Utkin 1977 [8], Gutman 1979 [36], Dorling and Zinober 1986 [16], et al.) are satisfied:

Published by WSEAS Press
www.wseas.org
ISBN: 978-960-474-050-5
ISSN: 1790-5117

$$\left.\begin{aligned}&\Delta A(\sigma) = BH(\sigma)\\&\Delta B(\sigma) = BE(\sigma)\\&D = BF\end{aligned}\right\} \tag{1.2}$$

and $D(\sigma) = BF(\sigma)$ for the general case if $D(\sigma)$ is a bounded uncertain matrix. In particularly, F is a known constant matrix if D is a known constant matrix.

Define following norms for bounded uncertain and certain matrices:

$$\left.\begin{aligned}&\omega = \| B^T P \| = \sqrt{\lambda_{\max}(PBB^T P)}\\&a = \max_{\sigma} \|\Delta A(\sigma)\|\\&\rho = \max_{\sigma} \| H(\sigma) \| = \max_{\sigma} \sqrt{\lambda_{\max}(H^T(\sigma)H(\sigma)} < 1\\&\min_{\sigma} \| F(\sigma) \| \le \| F(\sigma) \| = \sqrt{\lambda_{\max}(F^T(\sigma)F(\sigma)}\\&\le \max_{\sigma} \| F(\sigma) \| \le \max_{\sigma} \sqrt{mn} \| F(\sigma) \| = f \qquad [49]\\&\theta = \|f(t)\|\\&0 < \alpha = \min_{\sigma} \|E(\sigma)\| \le \|E(\sigma)\| \le \max_{\sigma} \|E(\sigma)\| = \eta < 1\end{aligned}\right\} \tag{1.3}$$

where P is a positive definite matrix to be determined; $\omega, a, \rho, f, \theta, \eta$ are some positive scalars. Without loss of generality similar to Mahmoud and Al-Muthairi (1994) [3] we can assume that $\eta < 1$ for $E(\sigma) > 0$ [3].

Observation 1: (Shyu and Yan, 1993) [48]. If

$$z(t) = e^{\beta t} x(t) \tag{1.4}$$

where $x(t)$ is the solution to the (1) and $z(t) = 0$ is asymptotically stable, then the system (1) has the stability degree $\beta > 0$.

1.4 Robust linear controller design

In this section, a new combined linear controller design techniques for stabilization of matched perturbed system (1) is considered. The stability and β-stability conditions are derived in terms of some matrix equations.

1.4.1 Combined linear control law

Let us construct following combined linear controller:

$$u(t) = -kB^T Px(t) - \mu \tag{1.5}$$

where k is a constant feedback gain, μ is a constant control vector term to be selected; $\|\mu\| \le \delta$.

Controller (5) consists of two parts: 1) Conventional linear state feedback similar to (Mahmoud and Muthairi 1994 [3], Cao and Sun 1998 [4]) which is used to compensate the parameter uncertainties and 2) Constant control term which is different from [3], [4], and used to reject the external disturbances. Note that, this control law is continuous and linear in state. Therefore, the existence of the solution of (1) under controller (5) also in the usual sense can be guaranteed. We want to design the parameters k, μ and P such that the perturbed closed-loop system is globally robustly asymptotically stable.

1.4.2 Global stability conditions

Published by WSEAS Press
www.wseas.org
ISBN: 978-960-474-050-5
ISSN: 1790-5117

The following theorem summarizes our stability results.

Theorem 1: Suppose that Assumption 1 holds. Then the uncertain system (1) under the action of the linear controller (5) is globally robustly asymptotically stable, if the following conditions are satisfied:

$$A^T P + PA + 2\omega\rho I_n - 2k(1-\eta)\omega^2 I_n = -Q < 0 \tag{1.6}$$

where Q is a positive definite matrix

$$\delta = \frac{f\theta}{1-\eta} \tag{1.7}$$

Proof: Choose a Lyapunov V-function candidate as

$$V(x(t)) = x^T(t)Px(t) \tag{1.8}$$

where $P = P^T > 0$ is a positive definite matrix.

The time derivative of (8) along the trajectory of (1), (5) is given by:

$$\begin{aligned}
&\dot{V}(x(t)) = \dot{x}^T(t)Px(t) + x^T(t)P\dot{x}(t) \\
&= x^T(t)A^T Px(t) + x^T(t)PAx(t) + 2x^T(t)P\Delta A(\sigma)x(t) + 2x^T(t)PDf(t) + 2x^T(t)P\left[B + \Delta B(\sigma)\right]\mu(t) \\
&= x^T(t)\left(A^T P + PA\right)x(t) + 2x^T(t)PBH(\sigma)x(t) + 2x^T(t)PBF(\sigma)f(t) - 2kx^T(t)PB\left(I_m + E(\sigma)\right)B^T Px(t) \\
&- 2x^T(t)PB\left(I_m + E(\sigma)\right)\mu \\
&= x^T(t)\left(A^T P + PA\right)x(t) + 2x^T(t)PBH(\sigma)x(t) \\
&- 2kx^T(t)PB\left(I_m + E(\sigma)\right)B^T Px(t) \\
&+ 2x^T(t)PB\left[F(\sigma)f(t) - \left(I_m + E(\sigma)\right)\mu\right]
\end{aligned} \tag{1.9}$$

In according to Rayleigh's principle (Skogestad and Waite 1997 [49], Zang 1999 [49]),

$$\lambda_{\min}(A) + \lambda_{\min}(B) < \|A + B\| < \lambda_{\max}(A) + \lambda_{\max}(B)$$

where A, B are positive definite matrices, A + B > 0 and triangle inequality $\|A + B\| \le \|A\| + \|B\|$, we can evaluate:

$$0 < 1 - \eta < 1 + \min_{\sigma} \lambda_{\min}(E(\sigma)) \le \|I_m + E(\sigma)\| \le 1 + \eta \tag{1.10}$$

where $\min_{\sigma} \lambda_{\min}(E(\sigma)) = \alpha_1 > 0$.

Correctness of inequalities (10) directly follows also from Fan's type results [49], [50] for positive semi-definite matrices A and B:

$$\left[\lambda_{\max}(A) - \lambda_{\max}(B)\right]x^T x \le x^T(A + B)x \le \left[\lambda_{\max}(A) + \lambda_{\max}(B)\right]x^T x$$

Then

$$(1-\eta)x^T x \le \left(I_m + E(\sigma)\right) \le (1+\eta)x^T x$$

or

$$1 - \eta \le \|I_m + E(\sigma)\| \le 1 + \eta .$$

Hence $-\|I_n + E(\sigma)\| \le -(1-\eta)$, $\eta < 1$; (1.11)

Therefore we can evaluate

$$2k(1-\eta)\left(B^T Px(t)\right)^T\left(B^T Px(t)\right) \le 2k\left(B^T Px(t)\right)^T\left(I_m + E(\sigma)\right)\left(B^T Px(t)\right) \le 2k(1+\eta)\left(B^T Px(t)\right)^T\left(B^T Px(t)\right) \tag{1.12}$$

Published by WSEAS Press
www.wseas.org
ISBN: 978-960-474-050-5
ISSN: 1790-5117

Since Schwarz's inequality holds:

$$2x^T(t)PB\left[F(\sigma)f(t)-\left(I_m+E(\sigma)\right)\mu\right]\le 2\left\|x^T(t)\right\|\left\|PB\right\|\left\|F(\sigma)f(t)-\left(I_m+E(\sigma)\right)\mu\right\|$$
$$=2\omega\left\|x^T(t)\right\|\left\|F(\sigma)f(t)-\left(I_m+E(\sigma)\right)\mu\right\| \tag{1.13}$$

Again based on Rayleigh's principle [49], [50]:

$$\left|\lambda_{\min}(A)-\lambda_{\max}(B)\right|\le\left\|A-B\right\|\le\lambda_{\max}(A)+\lambda_{\min}(B)$$

for $A-B\ge 0$ and triangle inequality (Vidyasagar 1978 [51]):

$\left\|\|x\|-\|y\|\right\|\le\|x-y\|$ for two given vectors x and y, we can evaluate the upper bound of (13) as follows:

$$\left|\min_{\sigma}\sqrt{\lambda_{\max}\left(F^T(\sigma)F(\sigma)\right)}\|f(t)\|-\max_{\sigma}\lambda_{\max}\left(I_m+E(\sigma)\right)\|\mu\|\right|$$
$$\le\left\|\|F(\sigma)f(t)\|-\|\left(I_m+E(\sigma)\right)\mu\|\right\|\le\|F(\sigma)f(t)-\left(I_m+E(\sigma)\right)\mu\|$$
$$\le\max_{\sigma}\sqrt{mn}\sqrt{\lambda_{\max}\left(F^T(\sigma)F(\sigma)\right)}\|f(t)\|-\min_{\sigma}\lambda_{\max}\left(I_m+E(\sigma)\right)\|\mu\|\le f\theta-(1-\eta)\delta \tag{1.14}$$

As a matter of fact we want, in light of $\dot{V}(x(t))\le 0$, to make an upper bound of this term to be equal to zero: $\|F(\sigma)f(t)-\left(I_m+E(\sigma)\right)\mu\|$ = 0, which always is possible because of selecting the some value of design parameter μ .

Let us evaluate:

$$2x^T(t)PB\Delta H(\sigma)x(t)\le 2\|PB\|\|H(\sigma)\|x^T(t)x(t)=2\omega\rho x^T(t)x(t); \tag{1.15}$$

Then

$$\dot{V}(x(t))\le x^T(t)\left(A^TP+PA\right)x(t)+2\omega\rho x^T(t)x(t)\ -2k(1-\eta)\omega^2x^T(t)x(t)+2\omega\left[f\theta-(1-\eta)\delta\right]\|x(t)\|$$
$$=x^T(t)\left[A^TP+PA+2\omega\rho I_n-2k(1-\eta)\omega^2I_n\right]x(t)+2\omega\left[f\theta-(1-\eta)\delta\right]\|x(t)\|$$
$$=-x^TQx(t)-2\omega\left[(1-\eta)\delta-f\theta\right]\|x(t)\| \tag{1.16}$$

In view of (16), if conditions (6) and (7) or the following same conditions are satisfied:

$$\Phi:=[\lambda_{\min}(Q)]>0 \tag{1.17}$$

$$\Omega:=[\delta(1-\eta)-f\theta]2\omega=0 \tag{1.18}$$

Then (16) reduces to

$$\dot{V}(x(t))\le-\Phi\|x(t)\|^2-\Omega\|x(t)\|=-\Phi\|x(t)\|^2<0 \tag{1.19}$$

Therefore, we conclude that the closed-loop perturbed system (1), (5) is globally robustly asymptotically stable. The theorem is proved.

Remark 1: There are three approaches for evaluation of terms in (9):

1) Vector-matrix norm evaluation approach:

Schwarz's inequality: $\left|v^Tw\right|\le\|v\|\|w\|$

Matrix product inequality: $\|UW\|\le\|U\|\|W\|$

where v,w are some vectors and U,W are some matrices.

Then, for example:

Published by WSEAS Press
www.wseas.org
ISBN: 978-960-474-050-5
ISSN: 1790-5117

$$2x^T(t)PBH(\sigma)x(t) = 2\left[B^T Px(t)\right]^T \left[H(\sigma)x(t)\right] \le 2\left\|B^T P\right\|\left\|x(t)\right\| \max_\sigma \left\|H(\sigma)\right\|\left\|x(t)\right\| = 2\omega\rho\left\|x(t)\right\|^2 \qquad (1.20)$$

This approach is used in (15). Similar evaluation is frequently encountered in literature, for example Cheres (1989) [37], Mahmoud and Al-Muthairi (1994) [3], Shyu and Yan (1993) [48] etc.

2) Summation evaluation approach also is very well known in literature, for example Cao and Sun (1998) [4]. This approach based on following inequality:

$$2v^T w \le \alpha\, v^T v + \frac{1}{\alpha} w^T w, \qquad \alpha > 0 \qquad (1.21)$$

Then

$$\begin{aligned} 2x^T(t)PBH(\sigma)x(t) &= 2\left[B^T Px(t)\right]^T \left[H(\sigma)x(t)\right] \le x^T(t)PBB^T Px(t) + x^T(t)H^T(\sigma)H(\sigma)x(t) \\ &\le \left\|PB\right\|^2 \left\|x(t)\right\|^2 + \max_\sigma \left\|H(\sigma)\right\|^2 \left\|x(t)\right\|^2 = (\omega^2 + \rho^2)\left\|x(t)\right\|^2 \end{aligned} \qquad (1.22)$$

3) Modification to summation evaluation approach:

$$\begin{aligned} 2x^T(t)PBH(\sigma)x(t) &\le x^T(t)x(t) + x^T(t)PBH(\sigma)H(\sigma)^T B^T Px(t) \\ &\le x^T(t)x(t) + x^T(t)\max_\sigma \left\|PBH(\sigma)\right\|^2 x(t) = \left[1 + \max_\sigma \left\|PBH(\sigma)\right\|^2\right]\left\|x(t)\right\|^2 \le \left[1 + \omega^2\rho^2\right]\left\|x(t)\right\|^2 \end{aligned} \qquad (1.23)$$

Note that, considered various evaluation approaches are true and there is a following relationship between them

$$2\,\omega\,\rho \le \omega^2 + \rho^2 \le 1 + \omega^2\rho^2 \qquad (1.24)$$

which is also true. Here and further, for our problems we can use all of alternative approaches that only inconsiderably influence the damping constant of V-function, stability region or equilibrium point of perturbed system.

Note that in this case the control action (5) is sufficient to reject the external disturbance, since $\delta(1-\eta) = f\theta$. Then the equilibrium point of perturbed closed-loop system (1), (5) is shifted from $\left\|x_e\right\| = \frac{\Omega}{\Phi}$ to origin $\left\|x_e\right\| = 0$ because δ is selected such that $\Omega = 0$ that is the uniformly bounded external disturbance is vanished by the negative constant control action (5). Moreover, $\dot{V}(x(t))$ does not contain the non-vanishing perturbation and becomes negative definite. Therefore, the origin of the closed-loop perturbed system (1), (5) becomes an equilibrium point by the control action (5) for uniformly bounded disturbance the effect of which is suppressed. For this reason also we may say that the origin of perturbed closed-loop system (1), (5) is globally asymptotically stable. Thus, the uniformly bounded disturbance is suppressed and origin is globally asymptotically stable if only if $\Omega = 0$ or $\delta(1-\eta) = f\theta$. But the origin cannot be made to be equilibrium by the control (5) for arbitrary disturbance $f(t)$. This particular result for linear perturbed systems does not contradict to Khalil (2002) [52] concept of ultimately boundedness solution of perturbed system.

Remark 2: The equilibrium of the perturbed system (1), (5) in general varies with the disturbance $f(t)$ since $f(t)$ is allowed to be a persistent disturbance. Let us consider following cases:

1) First, assume that $\Omega > 0$ or $\delta(1-\eta) > f\theta$. Then from (19) we have $\dot{V}(x(t)) < -\Phi\left\|x(t)\right\|^2 - \Omega\left\|x(t)\right\| < 0$ because $\Phi > 0$ and $\Omega > 0$. Therefore, we conclude that the solution of (1), (5) is uniformly ultimately bounded. Equilibrium point is shifted from origin to $x_e = -\frac{\Omega}{\Phi}$ because linear controller (5) in this case does not suppress only the effect of disturbance, but has produced an excessive negative constant control action as a non-vanishing perturbation. Although, this over control extended the region of stability, it cannot make the origin to be in equilibrium. Region of stability follows from inequality $-\Phi\left\|x(t)\right\|^2 - \Omega\left\|x(t)\right\| < 0$ or $-\left\|x(t)\right\|\left(\Phi\left\|x(t)\right\| + \Omega\right) < 0$ which is hold if $\left\|x(t)\right\| > 0$ and $\left\|x(t)\right\| > -\frac{\Omega}{\Phi}$. Thus, in

Published by WSEAS Press
www.wseas.org
ISBN: 978-960-474-050-5
ISSN: 1790-5117

this case the solution of (1), (5) is uniformly ultimately bounded in region $\|x(t)\| > -\frac{\Omega}{\Phi}$. Therefore, origin is stable but it is not an equilibrium point. Perturbed system is unstable or unbounded in region $(-\infty, -\frac{\Omega}{\Phi}]$.

2) Second, we consider the case when $\Omega < 0$ or $\delta(1-\eta) < f\theta$. Then from (19) we have

$\dot{V}(x(t)) < -\Phi\|x(t)\|^2 + \Omega\|x(t)\| = -\|x(t)\|(\Phi\|x(t)\| - \Omega) < 0$. This inequality is satisfied if $\|x(t)\| > 0$ and $\|x(t)\| > \frac{\Omega}{\Phi}$. Therefore, perturbed system is uniformly bounded in region $\|x(t)\| > \frac{\Omega}{\Phi}$. Origin of perturbed system (1), (5) is shifted to $\|x_e\| = \frac{\Omega}{\Phi}$ because the negative constant control action is not sufficient for suppression of disturbance. Therefore, origin is unstable or unbounded. Thus, in this case the perturbed system (1), (5) is uniformly bounded in region $\|x(t)\| > \frac{\Omega}{\Phi}$ and origin is unstable or unbounded. Perturbed system is unstable or unbounded in region $(-\infty, \frac{\Omega}{\Phi}]$.

3) Third, we consider the case when the external disturbance is not presented $f(t) = 0$. In this case linear controller (5) without constant term or $u(t) = -kB^T Px(t)$ renders the origin of the matched uncertain system (1) without external disturbance, to globally asymptotically stable. Since from (19) we have $\dot{V}(x(t)) < -\Phi\|x(t)\|^2 < 0$, because of $\Omega = 0$. Then this system has an equilibrium point at origin $\|x_e\| = 0$. Origin is globally asymptotically stable in region $(-\infty, \infty)$.

1.4.3 Robust stabilization with a stability degree β>0

With the Observation 1 now we are ready to present the following Corollary 1 of Theorem 1.

Corollary 1: Suppose that Assumption 1 holds. Then the perturbed system (1) driven by linear controller (5) is globally asymptotically stable with stability degree β>0 if the following conditions are satisfied:

$$(A + \beta I_n)^T P + P(A + \beta I_n) + 2\omega\rho I_n - 2k(1-\eta)\omega^2 I_n = -\overline{Q} \tag{1.25}$$

where $\overline{Q}$ is a positive definite matrix

$$\delta = \frac{f\theta}{1-\eta} \tag{1.26}$$

Proof: Utilize (4) to transform (1) into

$$\begin{aligned}\dot{z}(t) &= \beta e^{\beta t}x(t) + e^{\beta t}\dot{x}(t) = (A + \beta I_n)e^{\beta t}x(t) + B[I_m + E(\sigma)]e^{\beta t}u(t) + BH(\sigma)e^{\beta t}x(t) + BF(\sigma)e^{\beta t}f(t) \\ &= \overline{A}z(t) + B[I_m + E(\sigma)]\overline{u}(t) + BH(\sigma)z(t) + BF(\sigma)\overline{f}(t)\end{aligned} \tag{1.27}$$

where for the sake of simplicity, we let

$$\begin{aligned}\overline{A} &= A + \beta I_n \\ \overline{u}(t) &= e^{\beta t}u(t) \\ \overline{f}(t) &= e^{\beta t}f(t)\end{aligned} \tag{1.28}$$

$$\overline{\Phi} := [\lambda_{\min}(\overline{Q})] > 0$$

$$\overline{\Omega} := 2e^{\beta t}\omega[\delta(1-\eta) - f\theta] = 0 \tag{1.29}$$

Then controller (5) can be transformed into:

Published by WSEAS Press
www.wseas.org
ISBN: 978-960-474-050-5
ISSN: 1790-5117

$$\bar{u}(t) = e^{\beta t}u(t) = -kB^T Pe^{\beta t}x(t) - e^{\beta t}\mu = -kB^T Pz(t) - \bar{\mu} \tag{1.30}$$

where $\bar{\mu} = e^{\beta t}\mu$.

Now let us choose a Lyapunov V-function as:

$$V(z(t)) = z^T(t)Pz(t) \tag{1.31}$$

where P a positive definitive matrix.

The time derivative of (31) along the transformed system (27), (30) can be evaluated similar to proofs of Theorem 1 as follows:

$$\dot{V}(z(t)) \le -\bar{\Phi}\|z(t)\|^2 - \bar{\Omega}\|z(t)\| = -\bar{\Phi}\|z(t)\|^2 < 0 \tag{1.32}$$

Therefore, we conclude that the transformed closed-loop perturbed system (27), (30) is globally robustly asymptotically β-stable. The Corollary 1 is proved.

1.4.4 Robust stabilization control algorithm 1

The sufficient stability condition can be transformed into standard algebraic Riccati equality and robust linear controller with constant term can be obtained by solving an ARE.

Taking into account lover bound of evaluation (12) and (22) condition (6) can be rewritten as.

$$A^T P + PA + PBB^T P + \rho^2 I - 2k(1-\eta)PBB^T P = -Q \tag{1.33}$$

Letting

$$\rho^2 I + Q = Q_1,\ \rho^2 < 1 \tag{1.34}$$

$$k = \frac{1}{1-\eta} \tag{1.35}$$

where Q_1 is a positive definite symmetric matrix.

Then, condition (6) can be reduced to standard ARE:

$$A^T P + PA - PBB^T P + Q_1 = 0 \tag{1.36}$$

Now, control algorithm can be obtained by following steps:

- The parameters A, B, D, a, ρ, f, θ and η are given.
- Solve ARE (36) for given Q_1 by using MATLAB command.
- Check condition (6)
- Find k from (35)
- Find δ from (7)
- Obtain control algorithm from (5)

1.4.5 Design example 1: Linear control for F-16

Consider design of linear control system (1), (5) for jet fighter F-16. F-16 linearized lateral dynamics at the nominal flight condition is taken from (Stevens and Levis 2003 [53]). This dynamics is augmented by the aileron and rudder actuators given by simplified model $\frac{20.2}{s+20.2}$ [53]. A washout filter $r_w = \frac{s}{s+1}r$ is used with r yaw rate and r_w the washout yaw rate. The full dynamics model of F-

Published by WSEAS Press
www.wseas.org
ISBN: 978-960-474-050-5
ISSN: 1790-5117

16 aircraft with actuators, washout filter and control can be presented in the following state space form $\dot{x} = Ax + Bu$:

$$\begin{bmatrix} \dot{\beta} \\ \dot{\phi} \\ \dot{p} \\ \dot{r} \\ \dot{\delta}_a \\ \dot{\delta}_r \\ \dot{x}_w \end{bmatrix} = \begin{bmatrix} -0.329 & 0.640 & 0.0364 & -0.9917 & 0.0003 & 0.0008 & 0 \\ 0 & 0 & 1 & 0.0037 & 0 & 0 & 0 \\ -30.6492 & 0 & -3.6784 & 0.6646 & -0.7333 & 0.1315 & 0 \\ 8.5396 & 0 & -0.0254 & -0.4764 & -0.0319 & -0.0620 & 0 \\ 0 & 0 & 0 & 0 & -20.2 & 0 & 0 \\ 0 & 0 & 0 & 0 & 0 & -20.2 & 0 \\ 0 & 0 & 0 & 57.2958 & 0 & 0 & -1 \end{bmatrix} \begin{bmatrix} \beta \\ \phi \\ p \\ r \\ \delta_a \\ \delta_r \\ x_w \end{bmatrix} + \begin{bmatrix} 0 & 0 \\ 0 & 0 \\ 0 & 0 \\ 0 & 0 \\ 20.2 & 0 \\ 0 & 20.2 \\ 0 & 0 \end{bmatrix} \begin{bmatrix} u_a \\ u_r \end{bmatrix}$$

The output is of the form y = Cx:

$$\begin{bmatrix} r_w \\ p \\ \beta \\ \phi \end{bmatrix} = \begin{bmatrix} 0 & 0 & 0 & 57.2958 & 0 & 0 & -1 \\ 0 & 0 & 57.2958 & 0 & 0 & 0 & 0 \\ 57.2958 & 0 & 0 & 0 & 0 & 0 & 0 \\ 0 & 57.2958 & 0 & 0 & 0 & 0 & 0 \end{bmatrix} \begin{bmatrix} \beta \\ \phi \\ p \\ r \\ \delta_a \\ \delta_r \\ x_w \end{bmatrix}$$

where β is the sliding angle, ϕ is the bank angle, p is the roll rate, r is the yaw rate, δ_a is the aileron deflection, δ_r is the rudder deflection, x_w is the washout filter state. The control inputs are the aileron u_a and rudder u_r servo-inputs.

The linear controller design can be fulfilled by the following steps:

- Solve the matrix inequality MI (6) (or ARE (36)) by using MATLAB programming:

```
clear
clc
format long
A=[-0.322 0.064 0.0364 -0.9917 0.0003 0.0008 0;
   0 0 1 0.0037 0 0 0;-30.6492 0 -3.6784 0.6646 -0.7333
    0.1315 0;8.5396 0 -0.0254 -0.4764 -0.0319 -0.0620 0;
   0 0 0 0 -20.2 0 0;0 0 0 0 0 -20.2 0;0 0 0  57.2958 0 0 -1 ];
Lambda=eig(A);
B=[0 0; 0 0;0 0;0 0;20.2 0;0 20.2;0 0];
C=[0 0 0 57.2958 0 0 -1;0 0 57.2958 0 0 0 0;
  57.2958 0 0 0 0 0 0;0 57.2958 0 0 0 0 0];
CO=ctrb(A,B);
RankCo=Rank(CO)
OB = obsv(A,C);
RankOb=rank(OB)
t=45
H=[0.2*cos(t)  0   0 0 0 0 0; 0  0.2*sin(t)  0 0 0 0 0 ];
```


Published by WSEAS Press
www.wseas.org
ISBN: 978-960-474-050-5
ISSN: 1790-5117

```
E=[0.2*cos(t)  0; 0  0.2*sin(t)];
F=[0.2*cos(t) 0 0 0 0 0 0; 0 0.1*sin(t) 0 0 0 0 0];
DeltaA=B*H;
DeltaB=B*E;
D=B*F;
a=norm(DeltaA)
ro=norm(H)
f=norm(F)
eta=norm(E)
Q=[1 0 0 0 0 0 0; 0 1 0 0 0 0 0; 0 0 1 0 0 0 0;
   0 0 0 1 0 0 0; 0 0 0 0 1 0 0; 0 0 0 0 0 1 0;
   0 0 0 0 0 0 1];
P=[100.678  0.875 -3.119 10.225 10.67 0.047  -2.6412;
  0.875  586.16  -0.501   0.335  -0.377  10.63   1.1764;
  -3.119  -0.501   24.801 7.351 -0.762  0.128   -9.1344;
   10.225   0.335  7.351   5.491  -0.36  -0.72  .58763;
   10.67  -0.377  -0.762  -0.36 10.0247   0  10.999;
   0.047   10.63   0.128  -0.72  0  10.0247  -0.195;
  -2.6412 1.1764   -9.1344   .58763 10.999  -0.195  367.416];
Peig=eig(P)
Omega=sqrt(max(eig(P*B*B'*P)))
I=Q;
k=0.1
MI=A'*P+P*A+2*Omega*ro*I-2*k*(1-eta)*Omega^2*I+Q
 MIeig=eig(MI)
ft=[0.2*cos(t) 0.2*sin(t) 0 0  0 0 0];
theta=norm(ft)
delta=f*theta/(1-eta);
```

where

RankCo =7

RankOb =7

t =45

a =3.43765023911784

ρ =0.17018070490682

f =0.10506439776355

η=0.17018070490682

$\theta =$ 0.2000

$\delta = 0.0253$

The eigenvalues of open-loop system are:

Published by WSEAS Press
www.wseas.org
ISBN: 978-960-474-050-5
ISSN: 1790-5117

$$eig(A) = -1.0000; -0.4226 + 3.0634i;\ -0.4226 - 3.0634i; -0.0163; -3.6152; -20.2000; -20.2000$$

$$P = \begin{bmatrix} 100.678 & 0.875 & -3.119 & 10.225 & 10.67 & 0.047 & -2.6412 \\ 0.875 & 586.16 & -0.501 & 0.335 & -0.377 & 10.63 & 1.1764 \\ -3.119 & -0.501 & 24.801 & 7.351 & -0.762 & 0.128 & -9.1344 \\ 10.225 & 0.335 & 7.351 & 5.491 & -0.36 & -0.72 & 0.58763 \\ 10.67 & -0.377 & -0.762 & -0.36 & 10.0247 & 0 & 10.999 \\ 0.047 & 10.63 & 0.128 & -0.72 & 0 & 10.0247 & -0.195 \\ -2.6412 & 1.1764 & -9.1344 & 0.58763 & 10.999 & -0.195 & 367.416 \end{bmatrix}$$

$$\text{eig(P)} = \begin{bmatrix} 1.492754417852 \\ 8.692803404904 \\ 9.908526004284 \\ 27.089320552563 \\ 103.036178439956 \\ 368.011053084026 \\ 586.364764096415 \end{bmatrix}$$

$$B^T P = \begin{bmatrix} 215.5340 & -7.6154 & -15.3924 & -7.2720 & 202.4989 & 0 & 222.1798 \\ 0.9494 & 214.7260 & 2.5856 & -14.5440 & 0 & 202.4989 & -3.9390 \end{bmatrix}$$

$$\overline{P} = \begin{bmatrix} 4.6456 & -0.1438 & -0.3315 & -0.1581 & 4.3645 & 0.0192 & 4.7884 \\ -0.1438 & 4.6165 & 0.0672 & -0.3068 & -0.1542 & 4.3482 & -0.2538 \\ -0.3315 & 0.0672 & 0.0244 & 0.0074 & -0.3117 & 0.0524 & -0.3430 \\ -0.1581 & -0.3068 & 0.0074 & 0.0264 & -0.1473 & -0.2945 & -0.1558 \\ 4.3645 & -0.1542 & -0.3117 & -0.1473 & 4.1006 & 0 & 4.4991 \\ 0.0192 & 4.3482 & 0.0524 & -0.2945 & 0 & 4.1006 & -0.0798 \\ 4.7884 & -0.2538 & -0.3430 & -0.1558 & 4.4991 & -0.0798 & 4.9379 \end{bmatrix}$$

$$eig(\overline{P}) = 1.0e+005 * \begin{bmatrix} 0 & 1.3727 & 0.8725 & 0.0000 & 0.0000 & 0.0000 & 0.0000 \end{bmatrix}$$

ω =3.705035436862447e+002

k =0.10000000000000

$$MI = 1.0e+004 * \begin{bmatrix} -2.2354 & 0.0024 & -0.0681 & -0.0440 & -0.0197 & -0.0012 & 0.0288 \\ 0.0024 & -2.2655 & 0.0588 & 0.0069 & 0.0009 & -0.0215 & -0.0001 \\ -0.0681 & 0.0588 & -2.2839 & -0.0534 & -0.0000 & 0.0010 & 0.0044 \\ -0.0440 & 0.0069 & -0.0534 & -2.2604 & 0.0621 & 0.0004 & 2.1047 \\ -0.0197 & 0.0009 & -0.0000 & 0.0621 & -2.3059 & -0.0000 & -0.0227 \\ -0.0012 & -0.0215 & 0.0010 & 0.0004 & -0.0000 & -2.3060 & 0.0003 \\ 0.0288 & -0.0001 & 0.0044 & 2.1047 & -0.0227 & 0.0003 & -2.3390 \end{bmatrix}$$

Published by WSEAS Press
www.wseas.org
ISBN: 978-960-474-050-5
ISSN: 1790-5117

$$\mathrm{eig(MI)} = 1.0\mathrm{e}+004 * \begin{bmatrix} -4.40849596007995 \\ -2.36253528295538 \\ -2.31257559703383 \\ -2.30322752025645 \\ -2.24355990289093 \\ -2.17217989587229 \\ -0.19357938064528 \end{bmatrix}$$

which is a negative definite matrix. Thus, all design parameters are obtained.

System (1), (5) for F-16 is simulated by using Matlab-Simulink. Block diagram of this system is shown in Figure 1.1. Time responses and control functions are shown in Figure 1.2 and 1.3, respectively. Simulation results show that the control performances are satisfactory, for example settling time is 15 sec.

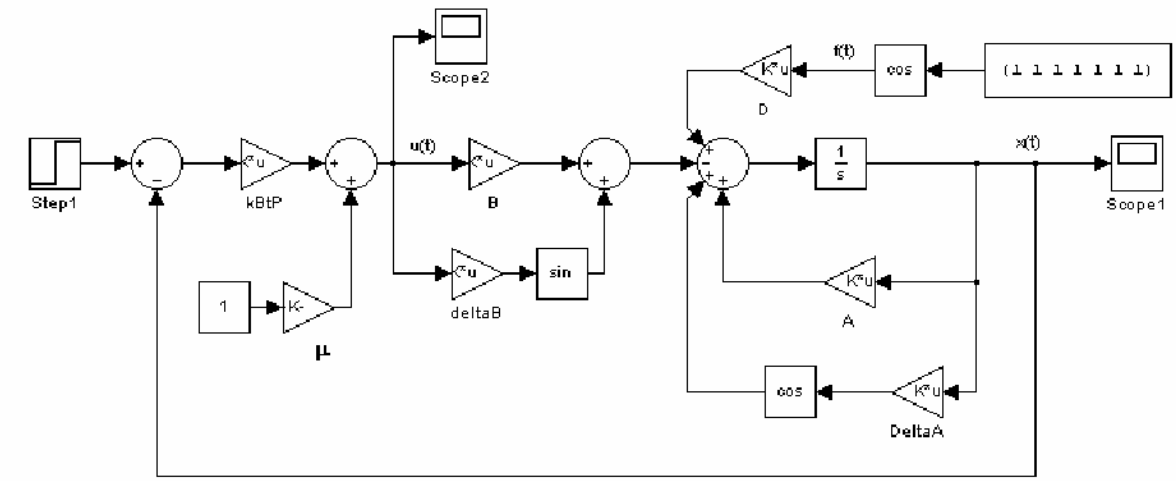

Figure 1.3 Robust linear control scheme for uncertain multi-input systems

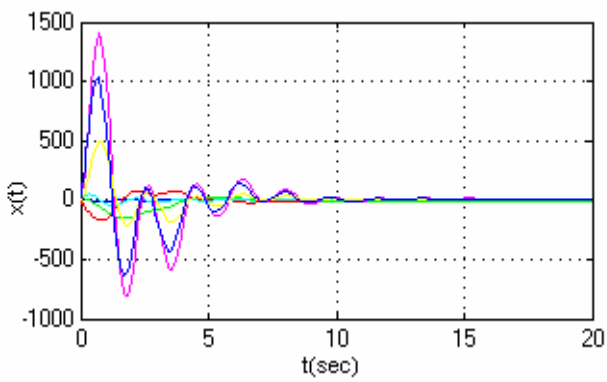

Figure 1.1. State responses

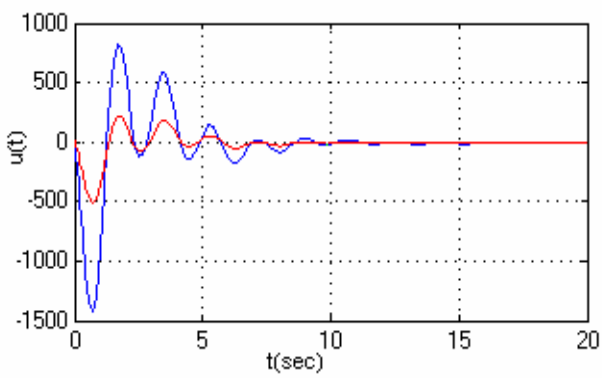

Figure 1.2 Linear control

1.5. Variable structure controller design

In this section combined variable structure controller design techniques for robust stabilization of uncertain system with parameter perturbations and external disturbances are advanced. The stability

Published by WSEAS Press
www.wseas.org
ISBN: 978-960-474-050-5
ISSN: 1790-5117

and sliding conditions are derived by using Lyapunov V-function method and formulated in terms of some matrix equalities. Matching and mismatching cases are considered also.

1.5.1 VSC law and matching sliding conditions

Form the combined simple variable structure controller as:

$$u(t) = -\left[k\|x(t)\| + \delta\right]\frac{s(t)}{\|s(t)\|} \tag{1.37}$$

where k is a scalar feedback gain and δ is a relay constant to be designed. The sliding surface is defined as follows

$$s(t) = B^T Px(t) \tag{1.38}$$

where $B^T P = C$ is a sliding mode ($m \times n$)-matrix of full rank and $CB = B^T PB$ is invertible, because $B^T PB$ is a positive definite ($m \times m$)-matrix.

VSC (37) consists of two parts: 1) min-max or quasi-relay term to compensate the matched or mismatched parameter uncertainties and to drive the system trajectories toward the switching surface until intersection occurs, 2) relay part to reject the matched external disturbances. After selecting the sliding mode control the next step is to choose the design parameters k, δ and P such that the stable sliding motion can always be generated on the manifold s(t)=0. With regard to the sliding condition, we may state the following theorem.

Theorem 2: Suppose that the Assumption 1 holds. Then the asymptotically stable sliding mode can always be generated on the sliding surface $s(t) = 0$ (38) defined for perturbed system (1), (37) if the following conditions are satisfied:

$$\overline{P}A + A^T\overline{P} + 2\rho\omega\lambda_{\max}(B^T PB)I_n - 2\omega_1 k(1-\eta)\lambda_{\min}(B^T PB)\overline{P} = -\overline{Q} \tag{1.39}$$

$$\delta = \frac{f\theta\lambda_{\max}(B^T PB)}{(1-\eta)\lambda_{\min}(B^T PB)} \tag{1.40}$$

where $\overline{P} = PBB^T P$ is a positive semi-definite matrix, $\overline{Q}$ in general is a positive semi-definite matrix and $\omega_1 = 1/\omega$.

Proof: Choose a Lyapunov function candidate as

$$V(s(t)) = s^T(t)s(t) \tag{1.41}$$

The time derivative of (41) along the trajectory of the system (1), (37), (38) can be calculated as follows:

$$\begin{aligned}
\dot{V} &= 2s^T(t)\dot{s}(t) = 2x^T(t)PB\left[B^T PAx(t) + B^T P\Delta A(\sigma)x(t) + B^T P(B + \Delta B(\sigma))u(t) + Df(t)\right] \\
&= 2x^T(t)PB\left[B^T PAx(t) + B^T PBH(\sigma)x(t) + B^T PB(I_m + E(\sigma))u(t) + B^T PBF(\sigma)f(t)\right] \qquad (1.42) \\
&= x^T(t)\left(PBB^T PA + A^T PBB^T P\right)x(t) + 2x^T(t)PBB^T PBH(\sigma)x(t) - 2k\|x(t)\|s^T(t)B^T PB\left(I_m + E(\sigma)\right)\frac{s(t)}{\|s(t)\|} \\
&\quad - 2\delta s^T(t)B^T PB(I_m + E(\sigma))\frac{s(t)}{\|s(t)\|} + 2s^T(t)B^T PBF(\sigma)f(t)
\end{aligned}$$

Since

Published by WSEAS Press
www.wseas.org
ISBN: 978-960-474-050-5
ISSN: 1790-5117

$$2k(1-\eta)\lambda_{\min}(B^T PB)\|x(t)\|\|s(t)\| \le 2k\|x(t)\|s^T(t)B^T PB(I_m + E(\sigma))\frac{s(t)}{\|s(t)\|}$$

$$\le 2k(1+\eta)\lambda_{\max}(B^T PB)\|x(t)\|\|s(t)\|; \tag{1.43}$$

$$2\delta(1-\eta)\lambda_{\min}(B^T PB)\|s(t)\| \le 2\delta s^T(t)B^T PB(I_m + E(\sigma))\frac{s(t)}{\|s(t)\|} \le 2\delta(1+\eta)\lambda_{\max}(B^T PB)\|s(t)\|; \tag{1.44}$$

$$2s^T(t)B^T PBF(\sigma)f(t) \le 2f\theta\lambda_{\max}(B^T PB)\|s(t)\|$$

and

$$2x^T(t)PBB^T PBH(\sigma)x(t) = 2s^T(t)B^T PBH(\sigma)x(t) \le 2\rho\lambda_{\max}(B^T PB)\|s(t)\|\|x(t)\| \tag{1.45}$$

Then

$$\begin{aligned}\dot{V}(s(t)) &\le x^T(t)\left(PBB^T PA + A^T PBB^T P\right)x(t)\\ &+ 2\rho\lambda_{\max}(B^T PB)\|s(t)\|\|x(t)\| \;\; - 2k(1-\eta)\lambda_{\min}(B^T PB)\|x(t)\|\|s(t)\|\\ &- 2\delta(1-\eta)\lambda_{\min}(B^T PB)\|s(t)\| + 2f\theta\lambda_{\max}(B^T PB)\|s(t)\|\end{aligned} \tag{1.46}$$

Since the following matrix inequalities hold:

$$\|s(t)\| = \left\|B^T Px(t)\right\| \le \left\|B^T P\right\|\|x(t)\| = \omega\|x(t)\| \tag{1.47}$$

and $\quad -\|x(t)\| \le -\dfrac{\|s(t)\|}{\omega} = -\omega_1\|s(t)\|$ (1.48)

Then

$$\begin{aligned}&-2k(1-\eta)\lambda_{\min}(B^T PB)\|x(t)\|\|s(t)\| \le -2\omega_1 k(1-\eta)\lambda_{\min}(B^T PB)\|s(t)\|^2\\ &= -2\omega_1 k(1-\eta)\lambda_{\min}(B^T PB)x^T(t)PBB^T Px(t)\end{aligned} \tag{1.49}$$

Therefore

$$\begin{aligned}\dot{V}(s(t)) &\le x^T(t)\Big[PBB^T PA + A^T PBB^T P + 2\rho\omega\lambda_{\max}(B^T PB)I_n\\ &\quad -2\omega_1 k(1-\eta)\lambda_{\min}(B^T PB)PBB^T P\Big]x(t) \;\; -2\Big[\delta(1-\eta)\lambda_{\min}(B^T PB) - f\theta\lambda_{\max}(B^T PB)\Big]\|s(t)\|\\ &= -x^T(t)\overline{Q}x(t) - \overline{\Omega}\|s(t)\| \le -\lambda_{\min}(\overline{Q})\|x(t)\|^2 - \overline{\Omega}\|s(t)\|\\ &\le -\omega_1{}^2\lambda_{\min}(\overline{Q})\|s(t)\|^2 - \overline{\Omega}\|s(t)\| \le -\overline{\Omega}\|s(t)\| < 0\end{aligned} \tag{1.50}$$

if the conditions (39), (40) or

$$\overline{\Phi} := \left\lfloor \omega_1{}^2\lambda_{\min}(\overline{Q})\right\rfloor \ge 0 \tag{1.51}$$

$$\overline{\Omega} := 2\Big[\delta(1-\eta)\lambda_{\min}(B^T PB) - f\theta\lambda_{\max}(B^T PB)\Big] \ge 0 \tag{1.52}$$

are satisfied. Therefore, we conclude that the asymptotically stable sliding mode is always generated on the $s(t) = 0$ (38) defined for (1), (37). In other words, the sliding manifold s(t)=0 (38) is reached in finite time and reaching time can be evaluated as $t_s \le \dfrac{\|s(0)\|}{\bar{\Omega}}$.

Theorem 2 is proven.

1.5.2 Global stability conditions for matching and mismatching cases

Published by WSEAS Press
www.wseas.org
ISBN: 978-960-474-050-5
ISSN: 1790-5117

Now we can derive the global asymptotical stability conditions for the closed-loop matched/mismatched perturbed system (1), (37), (38) with respect to the state coordinates x(t). The following theorem summarizes our stability results.

Theorem 3: Suppose that Assumption 1 holds. Then the multi-input system (1) with matched parameter uncertainties and matched external disturbances driven by variable structure controller (37), (38) is robustly globally asymptotically stable, if the following conditions are satisfied:

$$PA + A^T P + 2\rho\omega I_n - 2\omega_1 k(1-\eta)PBB^T P = -Q < 0 \tag{1.53}$$

$$\delta = \frac{f\theta}{(1-\eta)} \tag{1.54}$$

Proof: Choose a Lyapunov function candidate as:

$$V(x(t)) = x^T(t)Px(t) \tag{1.55}$$

where P is a positive definite matrix.

The time derivative of (55) along the trajectory of the system (1), (37), (38) can be calculated for both cases similar to proofs of Theorem 2:

$$\dot{V}(x(t)) \le -x^T(t)Qx(t) - 2[\delta(1-\eta) - f\theta]\|s(t)\| \le -\lambda_{\min}(Q)\|x(t)\|^2 - 2[\delta(1-\eta) - f\theta]\|s(t)\|$$

$$= -\Phi\|x(t)\|^2 - \Omega\|s(t)\| = -\Phi\|x(t)\|^2 < 0 \tag{1.56}$$

if the conditions (53) and (54) are satisfied.

Therefore, we conclude that the perturbed system (1), (37), (38) is globally asymptotically stable with respect to the state vector x(t). Theorem 3 is proven.

For mismatching system matrix case the following theorem can be stated and proved similar to Theorem 3.

Theorem 4: The multi-input system (1) with mismatched parameter uncertainties and matched external disturbances driven by variable structure controller (37), (38) is robustly globally asymptotically stable, if the following conditions are satisfied:

$$PA + A^T P + 2a\lambda_{\max}(P)I_n - 2\omega_1 k(1-\eta)PBB^T P = -Q < 0 \tag{1.57}$$

$$\delta = \frac{f\theta}{(1-\eta)} \tag{1.58}$$

1.5.3 Robust β-stability conditions

Finally, let us derive the robust β-stability conditions for system (1), (37), (38). This controlled system, in terms of new state coordinates z(t) is given by (27) for which $\bar{u}(t)$ can be presented as follows:

$$\bar{u}(t) = e^{\beta t}u(t) = -e^{\beta t}[k\|x(t)\| + \delta)]\frac{s(t)}{\|s(t)\|} = -\left[k\|z(t)\| - \delta e^{\beta t}\right]\frac{\bar{s}(t)}{\|\bar{s}(t)\|} \tag{1.59}$$

$$\bar{s}(t) = e^{\beta t}s(t) = B^T Pz(t) \tag{1.60}$$

The following corollary summarizes our β-stability conditions.

Corollary 2: Suppose that the Assumption 1 and the condition (53), (54) of Theorem 3 are met. Then the transformed matched uncertain system (27) driven by transformed controller (59), (60) has a stability degree β>0, if the following conditions are satisfied:

Published by WSEAS Press
www.wseas.org
ISBN: 978-960-474-050-5
ISSN: 1790-5117

$$P(A+\beta I_n)+(A+\beta I_n)^T P+2\rho\omega I_n-2\omega_1 k(1-\eta)PBB^T P=-\overline{Q} \tag{1.61}$$

where $\overline{Q}$ is a positive definite matrix and

$$\delta=\frac{f\theta}{1-\eta} \tag{1.62}$$

Proof: Choose a Lyapunov function candidate as:

$$V(x(t))=z^T(t)Pz(t) \tag{1.63}$$

The time derivative of (63) along the trajectory of transformed system (27), (59), (60) can be calculated as follows:

$$\begin{aligned}\dot{V}(z(t)) &\le -z^T(t)\overline{Q}z(t)-2e^{\beta t}\left[\delta(1-\eta)-f(\theta)\right]\|\bar{s}(t)\| \\ &\le -\lambda_{\min}(\overline{Q})\|z(t)\|^2-2e^{\beta t}\left[\delta(1-\eta)-\bar{f}(\theta)\right]\|\bar{s}(t)\|=-\overline{\Phi}\|z(t)\|^2-\overline{\Omega}\|\bar{s}(t)\|=-\overline{\Phi}\|z(t)\|^2<0\end{aligned} \tag{1.64}$$

if the conditions (61) and (62) are satisfied. Therefore, we conclude that closed-loop transformed system (27), (59), (60) with matched perturbations is globally asymptotically β-stable with respect to the new state coordinates z(t). Corollary 2 is proven.

1.5.4 Robust stabilization control algorithm 2

The sufficient stability condition can be transformed into standard algebraic Riccati equality and combined variable structure can be obtained by solving an ARE.

Taking into account lover bound of evaluation (12) and (22) condition (53) can be rewritten as.

$$A^T P+PA+PBB^T P+\rho^2 I-2\omega_1 k(1-\eta)PBB^T P=-Q \tag{1.65}$$

Letting

$$\rho^2 I+Q=Q_1,\ \rho^2<1 \tag{1.66}$$

$$k=\frac{1}{\omega_1(1-\eta)} \tag{1.67}$$

where Q_1 is a positive definite symmetric matrix.

Then, condition (65) can be reduced to standard ARE:

$$A^T P+PA-PBB^T P+Q_1=0 \tag{1.68}$$

Now, control algorithm (37), (38) can be obtained by following steps:

- The parameters A, B, D, a, ρ, f, θ and η are given.
- Solve ARE (68) for given Q_1 by using MATLAB command.
- Check condition (53)
- Find k from (67)
- Find δ from (62)
- Obtain control algorithm from (37)

1.5.5 Design example 2: Variable structure control for F-16

Consider variable structure controller (37), (38) design for F-16. F-16 linearized lateral dynamics at the nominal flight condition with the parameters is given in Example 1. Variable structure control design for lateral-directional F-16 aircraft can be fulfilled by the following steps:

Published by WSEAS Press
www.wseas.org
ISBN: 978-960-474-050-5
ISSN: 1790-5117

- Solve the matrix inequality MI (53) (or ARE (68)) by using MATLAB programming:

```
clear
clc
format long
A=[-0.322 0.064 0.0364 -0.9917 0.0003 0.0008 0;
   0 0 1 0.0037 0 0 0;-30.6492 0 -3.6784 0.6646 -0.7333
    0.1315 0;8.5396 0 -0.0254 -0.4764 -0.0319 -0.0620 0;
   0 0 0 0 -20.2 0 0;0 0 0 0 0 -20.2 0;0 0 0  57.2958 0 0 -1 ];
Lambda=eig(A);
B=[0 0; 0 0;0 0;0 0;20.2 0;0 20.2;0 0];
C=[0 0 0 57.2958 0 0 -1;0 0 57.2958 0 0 0 0;
  57.2958 0 0 0 0 0 0;0 57.2958 0 0 0 0 0];
CO=ctrb(A,B);
RankCo=Rank(CO)
OB = obsv(A,C);
RankOb=rank(OB)
t=45
H=[0.2*cos(t)     0      0 0 0 0 0;0      0.2*sin(t)  0 0 0 0 0 ];
E=[0.2*cos(t)     0  ;0      0.2*sin(t)];
F=[0.2*cos(t) 0 0 0 0 0 0;0 0.1*sin(t) 0 0 0 0 0];
DeltaA=B*H  ;
DeltaB=B*E  ;
D=B*F;
a=norm(DeltaA)
ro=norm(H)
f=norm(F)
eta=norm(E)
ft=[0.2*cos(t) 0.2*sin(t) 0 0  0 0 0];
theta=norm(ft)
```

where

RankCo =7

RankOb =7

t =45

a =3.43765023911784

ρ =0.17018070490682

f =0.10506439776355

η=0.17018070490682

$\theta =$ 0.2000

$\delta = 0.0253$

Published by WSEAS Press
www.wseas.org
ISBN: 978-960-474-050-5
ISSN: 1790-5117

Q=[0.2 0 0 0 0 0 0; 0 0.2 0 0 0 0 0; 0 0 0.2 0 0 0 0;

0 0 0 0.2 0 0 0; 0 0 0 0 0.2 0 0; 0 0 0 0 0 0.2 0;

0 0 0 0 0 0 0.2];

In=[1 0 0 0 0 0 0; 0 1 0 0 0 0 0; 0 0 1 0 0 0 0;

0 0 0 1 0 0 0; 0 0 0 0 1 0 0; 0 0 0 0 0 1 0;

0 0 0 0 0 0 1];

k1 = 10

B1=B*B'*k1

$$B1 = 1.0e+003 * \begin{bmatrix} 0 & 0 & 0 & 0 & 0 & 0 & 0 \\ 0 & 0 & 0 & 0 & 0 & 0 & 0 \\ 0 & 0 & 0 & 0 & 0 & 0 & 0 \\ 0 & 0 & 0 & 0 & 0 & 0 & 0 \\ 0 & 0 & 0 & 0 & 4.0804 & 0 & 0 \\ 0 & 0 & 0 & 0 & 0 & 4.0804 & 0 \\ 0 & 0 & 0 & 0 & 0 & 0 & 0 \end{bmatrix}$$

P = ARE(A, B1, In)

$$P = 1.0e+003 * \begin{bmatrix} 1.9033 & 0.0367 & 0.0149 & 0.1387 & -0.0002 & -0.0001 & 0.0177 \\ 0.0367 & 0.0118 & 0.0033 & 0.0027 & -0.0000 & 0.0000 & 0.0006 \\ 0.0149 & 0.0033 & 0.0011 & 0.0001 & -0.0000 & 0.0000 & 0.0002 \\ 0.1387 & 0.0027 & 0.0001 & 0.1256 & -0.0001 & -0.0001 & 0.0040 \\ -0.0002 & -0.0000 & -0.0000 & -0.0001 & 0.0000 & 0.0000 & -0.0000 \\ -0.0001 & 0.0000 & 0.0000 & -0.0001 & 0.0000 & 0.0000 & -0.0000 \\ 0.0177 & 0.0006 & 0.0002 & 0.0040 & -0.0000 & -0.0000 & 0.0004 \end{bmatrix}$$

Peig = eig(P)

$$Peig = 1e+3 * [1.9151\ 0.1149\ \ 0.0119\ \ 0.0002\ \ 0.0001\ \ 0.0000\ 0.0000]'$$

ω =sqrt(max(eig(P*B*B'*P))) = 5.2798

ω_1 =1/Omega = 0.1894

k=(k1)/(2*Omega1*(1-eta) = 31.8130

Pline=P*B*B'*P

$$Pline = \begin{bmatrix} 23.0237 & 3.1626 & 0.9849 & 9.5205 & -1.0429 & -0.4301 & 0.4688 \\ 3.1626 & 0.5696 & 0.1840 & 0.6928 & -0.1759 & 0.0203 & 0.0548 \\ 0.9849 & 0.1840 & 0.0597 & 0.1855 & -0.0564 & 0.0102 & 0.0166 \\ 9.5205 & 0.6928 & 0.1855 & 6.7351 & -0.2825 & -0.5392 & 0.2375 \\ -1.0429 & -0.1759 & -0.0564 & -0.2825 & 0.0551 & 0.0003 & -0.0189 \\ -0.4301 & 0.0203 & 0.0102 & -0.5392 & 0.0003 & 0.0547 & -0.0144 \\ 0.4688 & 0.0548 & 0.0166 & 0.2375 & -0.0189 & -0.0144 & 0.0102 \end{bmatrix}$$

Plineeig=eig(Pline)

$$Plineeig = [27.8764 \quad 2.6317 \quad 0.0000 \quad 0.0000 \quad 0.0000 \quad 0.0000 \quad 0.0000]$$

Lambdamax=max(Peig) = 1.9151e+003

BtransP=B'*P

Published by WSEAS Press
www.wseas.org

ISBN: 978-960-474-050-5
ISSN: 1790-5117

$$\text{BtransP} = \begin{bmatrix} -4.4365 & -0.7495 & -0.2403 & -1.1973 & 0.2348 & 0.0006 & -0.0804 \\ -1.8279 & 0.0888 & 0.0444 & -2.3025 & 0.0006 & 0.2339 & -0.0614 \end{bmatrix}$$

$$\text{B'PB} = \text{B'*P*B} = \begin{bmatrix} 4.7435 & 0.0119 \\ 0.0119 & 4.7238 \end{bmatrix}$$

$$\text{B'PBeig} = \text{eig(BtransPB)} = \begin{bmatrix} 4.7491 \\ 4.7182 \end{bmatrix}$$

δ =f*theta/(1-eta)= 0.0253

MI=A'*P+P*A-k1*Pline+In

$$\text{MI} = 1.0\text{e-}006 * \begin{bmatrix} -0.6519 & -0.0161 & -0.0060 & -0.0486 & 0.0001 & 0.0000 & -0.0063 \\ -0.0088 & -0.0002 & -0.0001 & -0.0006 & 0.0000 & -0.0000 & -0.0001 \\ -0.0041 & -0.0001 & -0.0000 & -0.0003 & 0.0000 & -0.0000 & -0.0000 \\ -0.0408 & -0.0011 & -0.0004 & -0.0030 & 0.0000 & 0.0000 & -0.0004 \\ 0.0001 & 0.0000 & 0.0000 & 0.0000 & 0.0000 & 0.0000 & 0.0000 \\ 0.0000 & 0.0000 & 0.0000 & 0.0000 & -0.0000 & -0.0000 & 0.0000 \\ -0.0059 & -0.0001 & -0.0001 & -0.0004 & 0.0000 & 0.0000 & -0.0001 \end{bmatrix}$$

MIeig=eig(MI)

$$\text{MIeig} = 1.0\text{e-}006 * \begin{bmatrix} -0.6552 & 0.0000 & -0.0000 & -0.0000 & 0.0000 & -0.0000 & -0.0000 \end{bmatrix}$$

which is a negative definite matrix.

Thus, all design parameters are obtained. System (1), (37) for F-16 is simulated by using Matlab-Simulink. Block diagram of this system is shown in Figure 1.4. Time responses, control and switching functions are shown in Figure 1.5, 1.6 and 1.7, respectively. Simulation results show that the control performances in general are satisfactory, for example settling time is 10 sec. Note that, settling time for variable structure controller faster than for linear controller.

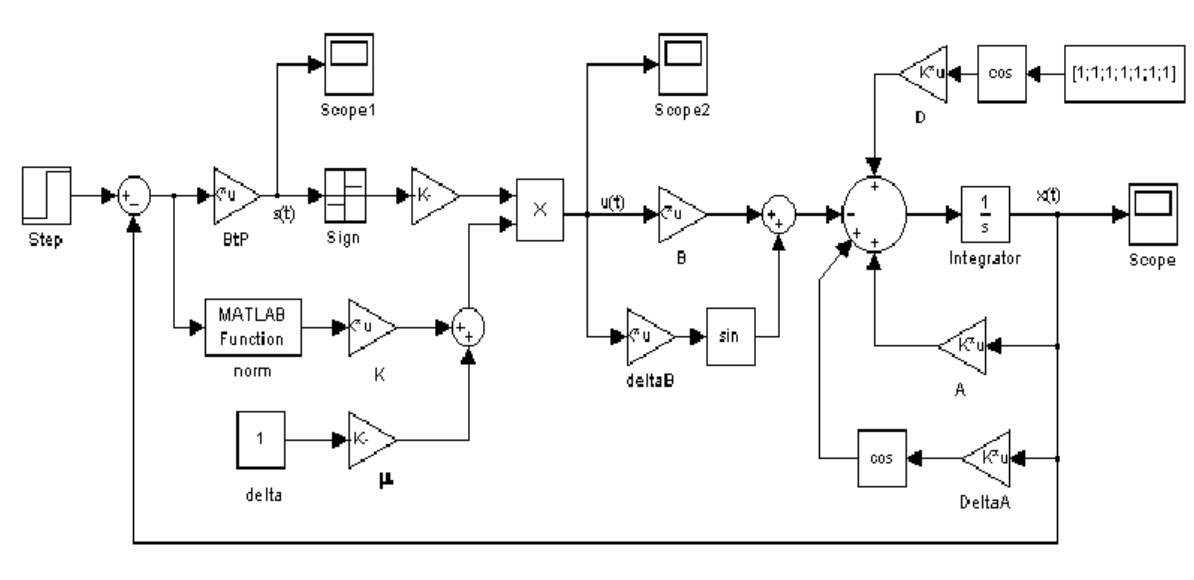

Figure 1.4 Robust variable structure control scheme for uncertain multi-input systems

Published by WSEAS Press
www.wseas.org
ISBN: 978-960-474-050-5
ISSN: 1790-5117

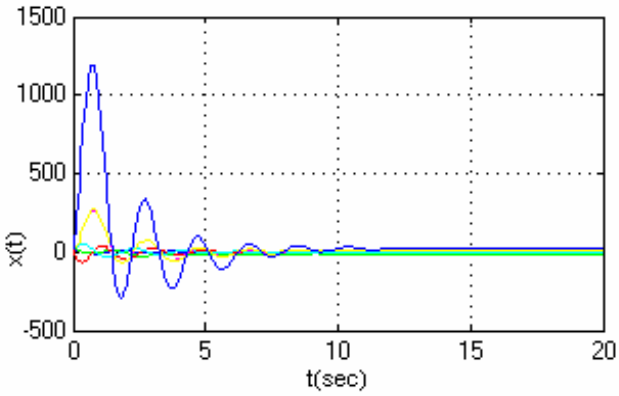

Figure 1.5 State responses

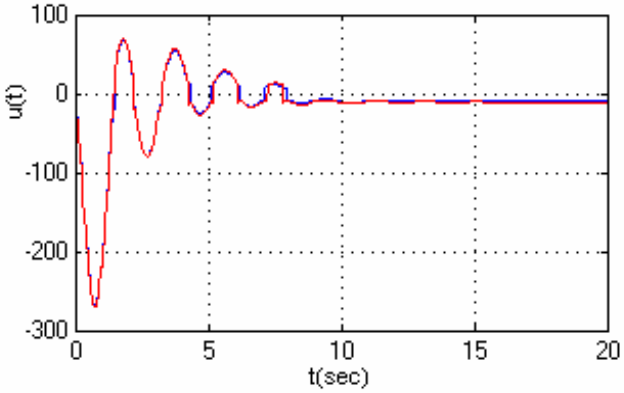

Figure 1.6 Variable structure control functions

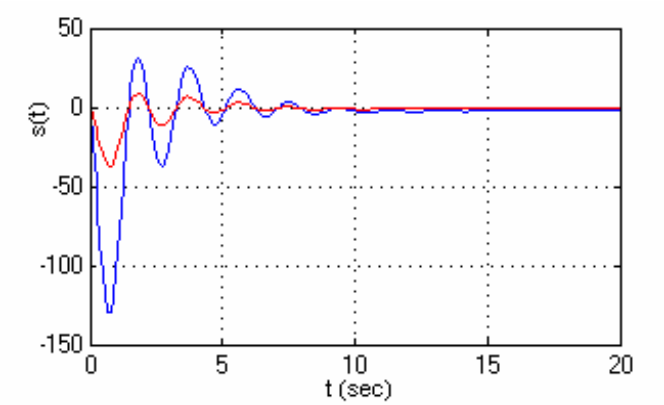

Figure 1.7 Switching functions

Published by WSEAS Press
www.wseas.org
ISBN: 978-960-474-050-5
ISSN: 1790-5117

1.6 Conclusions

We have designed two types of very simple robust full state feedback controllers: 1) combined linear and 2) combined variable structure controllers design techniques for stabilization of multi-input linear dynamical systems with matched/mismatched but available upper norm-bounded unknown parameter uncertainties subject to matched but upper norm-bounded external disturbances are advanced. The conventional equivalent control term is not used in second controller because equivalent control term needs to use the matching conditions and unavailable parameter uncertainties. The robust global asymptotical stability, β-stability and sliding conditions are parametrically obtained by using Lyapunov V-function method and systematically formulated in terms of some matrix equations. The robust controllers computational algorithms are presented. By these algorithms stability conditions are reduced to standard algebraic Riccatti equation (ARE) problem. Two design examples with simulation results for jet fighter F-16 are given to illustrate the usefulness of the obtained results.

1.7 References

1. Garofalo, F., and Glielmo, L. (Eds), 1996, Robust Control via Variable Structure and Lyapunov Techniques. London: Springer-Verlag.
2. Corless, M., 1994, Robust stability analysis and controller design with quadratic Lyapunov functions. Chapter 9 in Variable Structure and Lyapunov Control (Ed. by Zinober, A.S.I.), London: Springer-Verlag, pp. 181-203.
3. Mahmoud, M.S., and Al-Muthairi, N.F., 1994, Design of robust controllers for time delay systems. IEEE Transactions on Automatic Control, vol. 39, pp. 995-999.
4. Cao, Y. -Y., and Sun, Y. -X., 1998, Robust stabilization of uncertain systems with time varying multi-sate delay. IEEE Transactions on Automatic Control, vol. 43, no. 10, pp. 1484-1488.
5. Petersen, I.R., and Hollot, C.V., 1986, A Riccati equation approach to the stabilization of uncertain linear systems, Automatica, vol. 22, pp. 397-441
6. Shen, J.C., Chen, B.S. and Kung, F.C., 1991, Memoryless stabilization of uncertain dynamic delay systems: Riccati equation approach, IEEE Transactions on Automatic Control, vol. 36, no. 5, pp. 638-640.
7. Emelyanov, S.V., 1967, Variable Structure Control Systems (Moscow, Nauka, in Russian).
8. Utkin, V.I., 1977, Variable structure systems with sliding modes. IEEE Transactions on Automatic Control, vol. 22, pp. 212-222.
9. Utkin, V., Guldner, J. and Shi, J., 1999, Sliding Mode Control in Electromechanical Systems, London: Taylor and Francis Ltd.
10. Sabanovic, A., Fridman, L. M., and Spurgeon, S. (Editors), 2004, Variable Structure Systems: from Principles to Implementation, The IEE, London.
11. Decarlo, R.A., Zak, S.H. and Matthews, G.P., 1988, Variable structure control of nonlinear multivariable systems: A tutorial, Proceedings of the IEEE, vol. 76, pp. 212-232.
12. Hung, J.Y., Gao, W. and Hung, J.C., 1993, Variable structure control: A survey. IEEE Transactions on Industrial Electronics, vol. 40, pp. 2-22.
13. Spurgeon, S.K., 1991, Choice of discontinuous control component for robust sliding mode performance. International Journal of Control, vol. 53, pp. 163-179.
14. Edwards, CH. and Spurgeon, S.K., 1998, Sliding Mode Control: Theory and Applications, London: Taylor & Francis.
15. Hong, G.-M., and Wu, Y-C., 1989, Formation of sliding regime with uncertain plant parameters. International Journal of Systems Science, vol. 20, pp. 2291-2297.
16. Dorling, C.M., and Zinober, A.S.I, 1986, Two approaches to the hyper plane design in multivariable structure control systems. International Journal of Control, vol. 44, pp. 65-82.
17. Koshkouei, A. J., and Zinober, A. S. I., 2004, Sliding mode state observation for nonlinear systems, International Journal of Control, vol.77, no.2, pp.118-127.
18. Zhou, F. and Fisher, D.G., 1992, Continuous sliding mode control, International Journal of Control, vol. 55, no. 2, pp. 313-327.

Published by WSEAS Press
www.wseas.org
ISBN: 978-960-474-050-5
ISSN: 1790-5117

19. Yoo, D.S., and Chung, M.J., 1992, A variable structure control with simple adaptation laws for upper bounds on the norm of the uncertainties. IEEE Transactions on Automatic Control, vol. 37, pp. 860-869.
20. Zinober, A. S. I., 1994, An introduction to sliding mode variable structure control, Chapter 1 in Variable Structure and Lyapunov Control (Ed. by Zinober, A.S.I.), London: Springer-Verlag, pp.1-22.
21. Jafarov, E.M., and Tasaltin, R., 2000, Robust sliding mode control for the uncertain MIMO aircraft model F-18. IEEE Transactions on Aerospace and Electronics Systems, vol. 36, no. 4 (10), pp. 1127-1141.
22. Jafarov, E. M, and Tasaltin, R., 2001, Design of robust autopilot-output integral sliding mode controllers for guided missile systems with parameter perturbations, Aircraft Engineering and Aerospace Technology: An International Journal, vol.73, no.1, pp. 16-25.
23. Jafarov, E.M., 2003, Robust sliding mode control of multivariable time-delay systems. Systems Science Journal, vol. 29, no. 3, pp. 17-36.
24. Jafarov, E. M, Parlakci, M. N. A., and Istefanopulos, Y., 2005, A new variable structure PID-controller design for robot manipulators, IEEE Transactions on Control Systems Technology, vol.13, no.1, pp.122-130.
25. Kim, K. S., Park, Y. and Oh S. H., 2000, Designing robust sliding hyperplanes for parametric uncertain systems: A Riccati approach, Automatica, vol. 36 pp. 1041-1048.
26. Choi, H.H., 2002, Variable structure output feedback control design for a class of uncertain dynamical systems, Automatica, vol. 38, pp. 335-341.
27. Choi, H.H., 1997, A new method for variable structure control systems design: A linear matrix inequality approach, Automatica, vol. 33, no. 11, pp. 2089-2092.
28. Choi, H.H., 2001, Variable structure control of dynamical systems with mismatched norm-bounded uncertainties: an LMI approach, International Journal of Control, vol. 74, no. 13, 1324-1334.
29. Edwards, CH., Spurgeon, S.K. and R.G. Hebden, 2003, On the design of sliding mode output feedback controllers, International Journal of Control, vol. 76 nos. 9/10, pp. 893-905.
30. Perruquetti, W., and Barbot, J.P. (Eds), 2002, Sliding Mode Control in Engineering, Marcel Dekker, New York.
31. Transactions of The ASME, 2000, Editor A. G. Ulsoy, E. A. Misawa and V. Utkin, Journal of Dynamic Systems, Measurement, and Control, Special Issue on Variable Structure Systems, vol. 122, no. 4.
32. International Journal of Control, 2003, vol. 76, no. 9-10, Special Issue: Dedicated to Vadim Utkin on the Occasion of his 65th Birthday. Guest Editor: Leonid M. Fridman, Editor E. Rogers.
33. Singh, S. N., Steinberg, M. L., and Page A. B., 2003, Nonlinear adaptive and sliding-mode flight path control of F/A-18 model, IEEE Transactions on Aerospace and Electronic Systems, vol.39, no.4, pp.1250-1262.
34. Yeh, F. K., Chien, H. H., and Fu, L. C., 2003, Design of optimal midcourse guidance sliding-mode control for missiles with TVC, IEEE Transactions on Aerospace and Electronic Systems, vol. 39, no.3, pp.824-837.
35. Jerouane, M., Sepehri, N. and Lamnabhi-Lagarrigue, F., 2004, Dynamic analysis of variable structure force control of hydraulic actuators via the reaching law approach, International Journal of Control, vol. 77, no. 14, pp. 1260-1268.
36. Gutman, S., 1979, Uncertain dynamical systems-A Lyapunov min-max approach. IEEE Transactions on Automatic Control, vol. 24, pp. 437-443.
37. Cheres, E., 1989, Design of min-max controller with prescribed sliding motion. International Journal of Systems Science, vol. 20, pp. 2483-2493.
38. Takahashi, R.H.C., and Peres, P.L.D., 1999, H_2 guaranteed cost-switching surface design for sliding modes with non-matching disturbances. IEEE Transaction on Automatic Control, vol. 44, no. 11, pp. 2214-2218.
39. Choi, H.H., 2003, An LMI-based switching surface design method for a class of mismatched uncertain systems, IEEE Transactions on Automatic Control, vol. 48, no. 9, pp. 1634-1638.
40. Choi, H.H., 2004, An analysis and design method for uncertain variable structure systems with bounded controllers. IEEE Transactions on Automatic Control, vol. 49, no. 4, pp. 602-607.

Published by WSEAS Press
www.wseas.org
ISBN: 978-960-474-050-5
ISSN: 1790-5117

41. Ryan,E.P., 1983, A variable structure approach to feedback regulation of uncertain dynamical systems, International Journal of Control, vol. 38, no. 6, pp. 1121-1134.
42. Drazenovic, B., 1969, The invariance conditions in variable structure systems. Automatica, vol. 5, pp. 287-295.
43. Park, S. K. and Ahn, H.K., 1999, Robust controller design with novel sliding surface, IEE Proc.-Control Theory Applications, vol. 146, no. 3, pp. 242-246.
44. Ha, Q. P., D. C. Rye and H. F. Durrant-Whyte, 1999, Robust sliding mode control with application, International Journal of Control, vol. 72, no. 12, pp. 1087-1096.
45. Chen, X. and Fukuda, T., 1997, Computer-controlled continuous-time variable structure systems with sliding modes, International Journal of Control, vol. 67, no. 4, pp. 619-639.
46. Utkin, V. I., 1992, Sliding Modes in Control Optimization, Berlin: Springer-Verlag.
47. Iwasaki, T. and Skelton, R.E. (1994), All controllers for the general H_∞ control problem: LMI existence conditions and state space formulas, Automatica, vol. 30, no. 8, pp. 1307-1317.
48. Shyu, K.K, and Yan, J.J (1993), Robust stability of uncertain time-delay systems and its stabilization by variable structure control, International Journal of Control, vol. 57, no. 1, pp. 237-246.
49. Skogestad, S., and Postleth-Waite, I., 1997, Multivariable Feedback Control: Analysis and Design, New York: John Wiley.
50. Zhang, F., 1999, Matrix Theory: Basic results and techniques, New York: Springer Verlag.
51. Vidyasagar, M. 1978, Nonlinear Systems Analysis, New Jersey: Prentice-Hall.
52. Khalil, H.K., 2002, Nonlinear Systems, Third Edition, New Jersey: Prentice-Hall.
53. Stevens, B. L., and Levis, F. L., 2003, Aircraft Control and Simulations, New York: John-Wiley

Published by WSEAS Press
www.wseas.org
ISBN: 978-960-474-050-5
ISSN: 1790-5117

CHAPTER 2

Sliding Mode Control of Aircrafts and Missiles

2.1 Introduction

This chapter consists of two paragraphs. In first paragraph a robust flight control laws based on variable structure control (VSC) theory and Lyupanov V-function method are designed for a simplified aircraft model F-18. A min-max control (MMC) and VSC laws are derived, for multi input multi output (MIMO) systems with matching plant uncertainties, input nonlinearity and external disturbances. Two types of robust feedback controllers MMC and VSC for uncertain MIMO systems are considered. For the both cases the existence conditions of a stable sliding mode and robust asymptotic stability in large of uncertain MIMO systems by MMC and VSC are investigated. For the design of a MMC and VSC, measurable states and sliding surface is chosen so that the zero dynamics of the system are stable. An application of tracking and positioning of VSC of longitudinal dynamics is presented. Finally, simulation results are presented to show the effectiveness of the design methods. In second paragraph, the guided missile system is considered as SISO plant with parameter perturbations. The structure of the missile system examined in this work is not suitable for the use of classical linear controllers. On the other hand the missile system should possess good performances, such as zero steady state error, less settling time etc. Standard VSC control laws fail to control the steady state error due to the structure of the system matrices. For this reason we have proposed two new robust output integral sliding mode controllers and design procedures. An integrator is included in the sliding function, which results the reduction and removal of the output error. The total control consists of two parts: 1) equivalent control part which compensates the nominal regime of the missile system and 2) VSC part which compensates the parameter perturbations (changes in Mach number, altitude and mass of the vehicle etc) of missile system. We have derived a new constructive sliding and stability conditions for both cases by using Lyapunov's direct method. Computer simulations indicate that this approach yields a satisfactory control performance.

2.2 Robust sliding mode control systems for the uncertain MIMO aircraft model F-18

2.2.1 Brief analysis of flight control systems

The development of modern automatic control systems has played an important role in the growth of civil and military aviation. Modern aircraft include a variety of automatic control systems that aid the flight crew in navigation, flight management and augmenting the stability characteristics of the airplane. Aircraft stability and the analysis and synthesis of conventional and modern flight control systems are treated in the classical text-books [1-4]. Flight control law design techniques primarily use linear control theory. The aircraft dynamics are linearized and controllers are designed for a variety of flight conditions. However, insurance of high control performance using the classical control systems for the plant which has parametrical uncertainties and external disturbances, nonlinearity, and time delay is a still difficult problem.

In recent years, variable structure control with sliding mode is successfully applied to a flight control system with plant uncertainties [5-15]. When the system is on the sliding surface, the motion of system has fast response and good transient performance characteristics and it is

Published by WSEAS Press
www.wseas.org
ISBN: 978-960-474-050-5
ISSN: 1790-5117

insensitive to plant parameters variations and external disturbances. To take these advantages, modern flight control systems have been designed using the conventional and robust VSC techniques [14-31]. In [5], classical VSS theory applied to design a SISO flight control system. A variable structure approach to robust linear control of vertical takeoff and landing (VTOL) aircraft was considered in [6]. A nonlinear flight control system via sliding method was designed in [8].

Base on VSS theory, a discontinuous control law was derived, which accomplishes asymptotic output tracking in the closed loop nonlinear MIMO system in spite of the presence of parameter uncertainty [7]. This design approach was applied to synthesis nonlinear flight control system for asymptotically decoupled control of roll, angle of attack, and sideslip. It was assumed that roll angle and angle of attack represent the basic lateral and longitudinal variables the pilot would like the control, while there are circumstances where the pilot would like to sideslip without rolling and pitching. The chosen sliding surface are linear functions of tracking error, its derivative and integral of the tracking error. The simulated responses for the nominal system show that rapid, simultaneous lateral and longitudinal maneuvers can be performed in the presence of uncertainty in the aerodynamic coefficients [7]. Variable structure robust flight control system for the simplified F-14 aircraft model was designed in [9]. For MIMO uncertain systems a VSC law was derived. For the derivation of the control law, a choice of a sliding surface is made so that the zero dynamics of the system are stable. The linear lateral and longitudinal dynamics of the F-14 are decoupled. A VSC law with linear switching function was derived for the control of the roll angle, lateral velocity and yaw rate. Thus, VSC is successfully designed for the flight control system. However, sliding surface include higher order derivatives of the tracking error and may cause instability due to unmodelled system dynamics. The development and set point sliding mode controllers including saturation for a multi input nonlinear nonminimum phase PVTOL aircraft with external disturbances were considered in [10]. The aircraft state was determined by the position, x, y of the aircraft center of the mass , the pitch Euler angle, θ, of the aircraft relative to the x axes, and the corresponding velocities $\dot{x}, \dot{y}, \dot{\theta}$. The control inputs are u_1- the trust, and u_2 the rolling moment. A dynamic sliding mode control approach was employed for the aircraft system. The asymptotical stability robustness of the resulting closed – loop zero dynamic system and sliding reachability condition were successfully analyzed by using Lyapunov function method.

A sliding mode control was applied to a nonlinear system representing an air-to-air missile target interception process in [11]. Missile dynamics, control actuator dynamics, target dynamics, and interception model dynamics grouping together all the dynamical equations, a nonlinear 8th order model was obtained. A novel method was proposed incorporating the theory of VSC which yields excellent performance and desirable robustness properties. The existence condition of the sliding mode is formulated alternatively in terms of the motion of an equivalent control. Advantages and disadvantages of SMC for missile target system were analyzed. The pursuit, pure proportional navigation, true proportional navigation and proportional navigation candidates of switching surfaces, which are fairly simple but nonetheless have practical interpretations, were examined. It was shown that the proposed sliding mode controllers for nonlinear missile target system have very good transient performance. In [12], an equivalent sliding mode controller was designed for longitudinal time-variant motion of aircraft.

VSC, associated with model reference following, was designed for a helicopter flight control system [13]. For a given forward velocity, linearized state description was expressed in the MIMO time variant standard form, where 8 states correspond to a physical variables, namely: u being to the forward velocity; v_2 the vertical velocity; v the lateral velocity; θ and q the pitch attitude and pitch rate; ϕ and p roll attitude and roll rate; and r the yaw rate. The control defined by θ_2 and θ_1 are respectively, the longitudinal and lateral cyclic pitches and θ_r is the tail rotor pitch. From 8 states, only 5, the attitude and rates, can be measured and the outputs to be controlled are θ, r, φ. The performances obtained here can be favorable compared, to many other conventional control schemes.

Published by WSEAS Press
www.wseas.org
ISBN: 978-960-474-050-5
ISSN: 1790-5117

In [14], a new robust multivariable model reference control based on sliding mode scheme and Lyapunov function has been presented. The strategy requires only output information and utilizes a sliding mode observer to obtain estimates of the plant states. The closed loop-loop system has been proved to be stable and invariant with respect to matched uncertainty. The practicality oh the scheme has been demonstrated by considering a realistic helicopter control problem. It has been shown that a single controller can provide good performance across the full flight envelope. Thus, the given brief survey of papers and books [5-16] show that the VSC with sliding mode in recent years was successfully applied to design of many modern SISO, MIMO, time-invariant, time-varying and uncertain flight control systems. There fore, the design of VSC for modern flight control systems is an important problem. Here, of course, all problems are not solved, but the robust control via variable structure with sliding mode and Lyapunov techniques are basic instrument for the engineering design of modern flight control system. Therefore, now briefly analyze the method of robust control synthesis for uncertain systems.

In recent years, different approaches to the problem of robust control design for uncertain dynamical systems have been proposed. If bounds on the uncertainties are known then in such a case deterministic approach to the controller synthesis is a viable. Recently, two major approaches to the deterministic control systems are given [22]:

1) Variable structure control methods [17-21, 27-33].
2) Deterministic control using Lyapunov functions [22, 23, 26]
3) Combined methods [20, 24, 25, 34].

As shown in [24] the basic difference between the Lyapunov min-max control (MMC) and the variable structure control (VSC) is in their design methods. As explained above, the VSC is designed to stabilize the system via a prescribed sliding mode, where as the Lyapunov control is designed via the second method of Lyapunov and the concept of generalized dynamical system. Since a Lyapunov control design is, in general, simpler than a VSC, it seems reasonable to obtain a Lyapunov control design for a VSC. We will show that, both design methods can be successfully be applied to synthesis of uncertain systems.

In this paper a robust flight control laws for a simplified F-18 aircraft model are designed via variable structure and Lyapunov function. Two types feedback controllers: MMC and VSC for MIMO systems with matching plant uncertainties, input nonlinearity and external disturbances are considered. For both cases the existence conditions of a stable sliding mode in the systems and robust asymptotic stability in large of uncertain MIMO systems by MMC and VSC are investigated. The aircraft model has parametric uncertainty and wind gust disturbance inputs. Since the linearized longitudinal and lateral dynamics are decoupled, the controllers design can be performed separately for longitudinal and lateral control. For the design of a MMC and VSC a judicious choice of a measurable state vector and a sliding surface is made so that zero dynamics of the system are stable. This work is limited to the design of a longitudinal control laws though the design technique can easily be applied to the lateral dynamics. Finally, simulation results are presented to show the effectiveness of the design methods.

This works is organized as follows. The F-18 longitudinal and lateral dynamics and flight control problem are given in section II. The system description and assumption considered in section III.The design of the robust MMC with stable sliding mode presented in section IV. The design of the robust VSC with stable sliding mode is presented in section V. Section VI presents a variable structure longitudinal flight control. Simulation results are presented in section VII.

2.2.2 Longitudinal and lateral dynamics of F-18

Published by WSEAS Press
www.wseas.org
ISBN: 978-960-474-050-5
ISSN: 1790-5117

The aircraft model described in this section is based upon a modified version of the F-18 aircraft and has been taken from [35].

The decoupling linearized longitudinal and lateral/directional linear state dynamical equations of motion of the F-18 aircraft are given by [35]:

$$\begin{bmatrix} \dot{\alpha} \\ \dot{q} \end{bmatrix} = A_{long} \begin{bmatrix} \alpha \\ q \end{bmatrix} + B_{long} \begin{bmatrix} \delta_E \\ \delta_{PTV} \end{bmatrix} \tag{2.2.1}$$

where

$$A_{long} = \begin{bmatrix} Z_\alpha & Z_q \\ M_\alpha & M_q \end{bmatrix}, \qquad B_{long} = \begin{bmatrix} Z_{\delta E} & Z_{\delta PTV} \\ M_{\delta E} & M_{\delta PTV} \end{bmatrix}$$

$$A_{long}^{m3h26} = \begin{bmatrix} -0.2296 & 0.9931 \\ 0.02436 & -0.2046 \end{bmatrix}, \; B_{long}^{m3h26} = \begin{bmatrix} -0.0434 & -0.01145 \\ -1.73 & -0.517 \end{bmatrix}$$

$$A_{long}^{m5h40} = \begin{bmatrix} -0.2423 & 0.9964 \\ -2.342 & -0.1737 \end{bmatrix}, \; B_{long}^{m5h40} = \begin{bmatrix} -0.0416 & -0.01141 \\ -2.595 & -0.8161 \end{bmatrix}$$

$$A_{long}^{m7h14} = \begin{bmatrix} -1.175 & 0.9871 \\ -8.458 & -0.8776 \end{bmatrix}, \qquad B_{long}^{m7h14} = \begin{bmatrix} -0.194 & -0.03593 \\ -19.29 & -3.803 \end{bmatrix}$$

and

$$\begin{bmatrix} \dot{\beta} \\ \dot{p} \\ \dot{r} \end{bmatrix} = A_{lat/direc} \begin{bmatrix} \beta \\ p \\ r \end{bmatrix} + B_{lat/direc} \begin{bmatrix} \delta_{DT} \\ \delta_A \\ \delta_R \\ \delta_{RTV} \\ \delta_{YTV} \end{bmatrix} \tag{2.2.2}$$

where

$$A_{lat/direc} = \begin{bmatrix} Y_\beta & \sin(\alpha) & -\cos(\alpha) \\ L_\beta & L_p & L_r \\ N_\beta & N_p & N_r \end{bmatrix}, \qquad B_{lat/direc} = \begin{bmatrix} Y_{\delta DT} & Y_{\delta A} & Y_{\delta R} & Y_{\delta RTV} & Y_{\delta YTV} \\ L_{\delta DT} & L_{\delta A} & L_{\delta R} & L_{\delta RTV} & L_{\delta YTV} \\ N_{\delta DT} & N_{\delta A} & N_{\delta R} & N_{\delta RTV} & N_{\delta YTV} \end{bmatrix}$$

$$A_{lat/dir}^{M3h10} = \begin{bmatrix} -0.1292 & 0.1738 & -0.9833 \\ -8.643 & -1.129 & 0.5986 \\ 1.519 & -0.01327 & -0.1105 \end{bmatrix}, \qquad B_{lat/dir}^{M3h10} = \begin{bmatrix} -0.006987 & 5.096 & 0.1968 \\ -0.005249 & 6.075 & -0.1522 \\ 0.01285 & 0.51 & -0.3872 \\ 0 & 0.1781 & 0.0008849 \\ 0.006894 & 0.02478 & -0.3397 \end{bmatrix}^T$$

Published by WSEAS Press
www.wseas.org
ISBN: 978-960-474-050-5
ISSN: 1790-5117

$$A_{lat/dir}^{M5h20} = \begin{bmatrix} -0.1354 & 0.09036 & -0.949 \\ -10.37 & -1.469 & 0.5126 \\ 2.281 & -0.01482 & -0.1277 \end{bmatrix}, \quad B_{lat/dir}^{M5h20} = \begin{bmatrix} -0.01091 & 9.93 & 0.2757 \\ -0.005695 & 12.12 & -0.2797 \\ 0.01555 & 0.9416 & -0.7419 \\ 0 & 0.3977 & -0.001175 \\ 0.00489 & 0.02817 & -0.3861 \end{bmatrix}$$

$$A_{lat/dir}^{M5h20} = \begin{bmatrix} -0.1275 & 0.0679 & -0.997 \\ -11.92 & -1.404 & 0.4283 \\ 2.776 & -0.01099 & -0.01240 \end{bmatrix}, \quad B_{lat/dir}^{M5h20} = \begin{bmatrix} -0.01108 & 12.54 & 0.3656 \\ -0.0005726 & 14.27 & -0.2088 \\ 0.01428 & 1.085 & 0.9165 \\ 0 & 0.9813 & -0.005925 \\ 0.007537 & 0.0583 & -0.7992 \end{bmatrix}^T$$

where

α angel of attack
q pitch rate
$\dot{\alpha}$ angle velocity of attack
$\dot{q}$ pitch acceleration
δ_{E} symmetric elevator position
δ_{PTV} symmetric pitch thrust velocity nozzle position
β angle of sideslip
p roll rate
r yaw rate
$\dot{\beta}$ angle velocity of sideslip
$\dot{p}$ roll acceleration
$\dot{\eta}$ yaw acceleration
δ_{DT} asymmetric elevator position
δ_A aileron position
δ_R rudder position
δ_{RTV} asymmetric pitch thrust vectoring nozzle position
δ_{YTV} yaw thrust vectoring nozzle position

and the nomenclature, for example $A_{long}^{m3h.26}$, is the longitudinal state matrix at Mach.3 and 26 kft[35]. It should be noted that lateral dynamics assuming that the angel of attack is constant, that is: the lateral dynamics change as the angel of attack varies.
Thus, we can write the perturbed longitudinal and lateral state equations of follows

$$\dot{x} = (A + \Delta A)x + (\mathrm{B} + \Delta \mathrm{B})u \tag{2.2.3}$$

where $x = [\alpha \quad q]^T$, $u = [\delta_{\mathrm{E}} \quad \delta_{PTV}]^T$, A^* : (2 x 2) and B^* : (2 x 2) are matrices for longitudinal motion; $x = [\beta \quad p \quad r]^T$,
$u = [\delta_{DT} \quad \delta_A \quad \delta_R \quad \delta_{RTV} \quad \delta_{YTV}]^T$, A^* : (3 x 3), B^* : (3 x 5) are matrices for lateral motion; $A^* = A + \Delta A$, $B^* = B + \Delta B$.

The flight control task is to track the reference trajectories $x(t) \to x_r(t)$. Suppose a reference trajectory $x_r(t)$ (for tracking control) or $x_r = const.$ (for position control) are given. We are

Published by WSEAS Press
www.wseas.org
ISBN: 978-960-474-050-5
ISSN: 1790-5117

interested in designing the MMC and VSC such that, stable sliding mode can be generated and closed loop system states are asymptotically stable.

2.2.3 System description and assumptions

Consider the following uncertain dynamical system

$$\dot{x}(t) = (A + \Delta A)x(t) + f(t,x) + (B + \Delta B)u(t) + Dw(t) \tag{2.2.4}$$

where $x(t) \in R^n$ is the measurable current value of the state, $x(t) \in R^m$ is control function $w(t) \in R^r$ is the external disturbance vector bounded by $\|w(t)\| \le \theta$ where $\|.\|$ is the Euclidean norm of a vector, $\theta = const$, *A, B, D* are constant matrices of appropriate dimensions, with *B* of full rank, and the matrices $\Delta A, f(t,x), \Delta B$ and *w(t)* represent uncertainty of the linear portion, the nonlinear input uncertainty of the system which is coupled with state variables, and the input matrix uncertainty respectively. System matrix A in general is an unstable matrix.

We now make the following standard assumptions.

Assumption 1: (Matching condition): The uncertainty matrices $\Delta A, \Delta B$ and *D* satisfy the following rank conditions [26, 36, 28, 29, 37]

$$rank[B \vdots \Delta AT] = rank[B \vdots \Delta B] = rank[B \vdots D] = rank[B]$$

where $\bar{x} = Tx, T$ is the matrix of the basis vectors of the reduced order sliding subspace. Or for all uncertain element $\sigma \in \Omega$ there exist matrices of appropriate dimensions $H(.), E(.), F(.)$ and *g*(.), such that [23, 24]

$$\Delta A(\sigma) = BH(\sigma)\ ;\ \Delta B(\sigma) = BE(\sigma)$$
$$D(w) = BF(\sigma)\ ;\ f = Bg \tag{2.2.5}$$

where Ω is compact subset.

From the structural assumption, all uncertain elements can be lumped [23, 38] and the system (4) can be rewritten as

$$\dot{x}(t) = Ax + B(u + \eta),\ \ x(t_0) = x_0 \tag{2.2.6}$$

where $\eta \in R^m$ represents the system total uncertainty or total perturbation [39] and is given by:

$$\eta = H(\sigma)x + E(\sigma)u + F(\sigma)w + g\,,\quad \sigma \in \Omega$$

Assumption 2: There are positive constants ρ_0 and ρ_1 such that [38]

$$\|\eta(t,x)\| \le \rho(t,x) = \rho_0 + \rho_1\|x\|. \tag{2.2.7}$$

In addition to Assumption 1 and 2 we also assume that the traditional assumption the pair (*A, B*) is complete state controllable is also valid.

We now consider system (6). Let x(t) be the solution of (6) at *t* forced by $\{u(t), \eta(t)\}$. The basic stability question is: find a control strategy *u*(*x*(*t*)) such that, the system has a sliding mode and the origin is uniformly asymptotically stable in the large.

For convenience, we now introduce the following notations

Published by WSEAS Press
www.wseas.org
ISBN: 978-960-474-050-5
ISSN: 1790-5117

$$\mu = \min_{\sigma}\|E(\sigma)\| \ ; \ h = \max_{\sigma}\|H(\sigma)\|; \ f = \max_{\sigma}\|F(\sigma)\| \ ; \ \gamma = \|B^T P\|, b = \|B\|$$

$$\|g(t,x)\| \le g_0\|x\|, g_0 = const > 0 \qquad (2.2.8)$$

where $\|.\|$ is the spectral norm of the matrix. We shall use $W^T, \lambda(W), \lambda_{\min}(W), \lambda_{\max}(W)$ to denote the transpose, eigenvalue, minimum eigenvalue and maximum eigenvalue of a square matrix W respectively.

2.2.4 Combined min-max control

Theoretical developments and the general way for the design of discontinuous min-max control and variable structure control of various uncertain systems and the derivation of sliding and stability conditions for the systems are known and available in the literature as we have shown in Section I. But uncertain systems in this combination, namely together with parameter perturbations (ΔA), input matrix perturbations (ΔB), input nonlinear uncertainties $(f(t,x))$ and external disturbances ($w(t)$) have not been considered in literature. In this section we propose a combined min-max control law. Thus, we need to investigate complete uncertain dynamical system with parameter perturbations, input nonlinearity, and external disturbances (4) driven by new combinations of discontinuous controllers, according to the sliding mode control theory. The sliding mode in min-max control and in variable structure control possesses attractive advantages e.g. fast response, good transient performance, and insensitivity to variation in plant parameters and external disturbances compared to linear control strategies, including robust H_∞. To take these benefits, we design two type min-max controller and variable structure controller to stabilize uncertain system in robust manner. To stabilize the uncertain system (6), we first choose a simple robust feedback MMC law, as recommended in [23-25, 21, 29], as follows

$$u(t) = -[k\|x(t)\| + \delta]\frac{s(t)}{\|s(t)\|} \qquad (2.2.9)$$

where k and δ are scalar design parameters and $s(t)$ is a switching function to be selected.

We first discuss the behavior of the sliding mode. Note that the unit control (9) is in fact a sliding mode control which is discontinuous on the sliding surface.

$$s = B^T Px \qquad (2.2.10)$$

where $P = P^T > 0$ is any positive definite matrix. Provided that unknown total disturbance denoted by the term $\eta(x,t)$ can be rejected by the choice of the scalar feedback gain parameter k. The mxn matrix $C = B^T P$ is of full rank and the matrix $CB = B^T PB$ is non singular.

After selecting the switching surface, the next step is to choose the scalar feedback gain k and P such that the sufficient condition of a sliding mode [40,17]

$$s^T \dot{s} < 0 \qquad (2.2.11)$$

is satisfied and the closed loop system dynamics on the sliding mode is stable.

The direct switching function approach for scalar was proposed in [40],

$$s\ \dot{s} < 0 \qquad (2.2.11a)$$

is global. This condition is sufficient but not necessary. A similar sufficient condition that is local in nature was proposal in [41],

$$\lim_{s\to+0}\dot{s} < 0 \text{ and } \lim_{s\to-0}\dot{s} > 0 \qquad (2.2.11b)$$

a combined approach [50] is

$$\lim_{s\to 0} s\ \dot{s} < 0 \qquad (2.2.11c)$$

there are various global reaching conditions which is analyzed in [18]:

The Lyapunov function approach

Published by WSEAS Press
www.wseas.org
ISBN: 978-960-474-050-5
ISSN: 1790-5117

$$V = \frac{1}{2} s^T s, \;\; \dot{V} = s^T \dot{s} < 0 \qquad \text{when} \quad s \neq 0 \tag{2.2.11d}$$

which is equivalent to (11). Finite reaching condition is given [18] as

$$\dot{V} < -\varepsilon - kV \tag{2.2.11e}$$

where ε *and* k are positive scalar.

The reaching law method [18]

$$\dot{s} = -Q\, sign(s) - Ks \tag{2.2.11g}$$

where Q and K are diagonal matrices with positive elements.

Another reaching condition [51], [52] is

$$\frac{1}{2}\frac{d}{dt} s^2 \leq \eta |s|, \quad t_{reach} \leq \frac{|s(0)|}{\eta} \tag{2.2.11f}$$

Where η is a positive constant.

The power rate reaching law for scalar case [18] is

$$\dot{s} = -k|s|^{\alpha} \;\; sign(s), \quad 0 < \alpha < 1 \tag{2.2.11h}$$

Similar combined reaching condition for our multivariable case can be rewritten as follows:

$$s^T \dot{s} \leq \eta |s|, \quad t_{reach} \leq \frac{\|s(0)\|}{\eta} \tag{2.2.11k}$$

This inequality implies that the trajectory reaches the sliding surface in finite time t_{reach} and remains on the sliding surface. Note that, the sufficient condition for the existence of a sliding mode on switching surface, which possesses an attraction region, also satisfies the sufficient finite reaching condition. In [53] it was established that, any trajectory starting from any initial value $s(0)$ at time $t = 0$, reaches the switching surface $s(t) = 0$ in finite time

$$t_{reaxh} = \frac{1}{\eta} \ln(1 + \frac{|s(0)|}{k}) \tag{2.2.11m}$$

by the reaching law [53]

$$\dot{s} = -\eta[s + k \;\; sign(s)] \tag{2.2.11n}$$

which similar to (11g), (11f), (11k).

Another reaching condition similar to (11h) and evaluation of finite hitting time was analyzed in [54]. After this brief analysis of sliding conditions we now summarize our results for a sliding mode in the following Lemma.

Lemma 1: Suppose that Assumptions 1, 2 and following conditions are valid:

$$A^T\overline{P} + \overline{P}A + 2h\gamma\lambda_{\max}(B^T PB)I - 2k\gamma_1(1+\mu)\lambda_{\min}(B^T PB)\overline{P} + 2g_0\gamma\lambda_{\max}(B^T PB)I = -\overline{Q} \tag{2.2.12}$$

where $\overline{P} = PBB^T P$ is a positive semi-definite and $\overline{Q}$ is a positive definite matrices.

$$\delta = \frac{f\theta\lambda_{\max}(B^T PB)}{(1+\mu)\lambda_{\min}(B^T PB)} \tag{2.2.13}$$

Then the sufficient condition for the existence of the sliding mode in the uncertain system (4) or (6) is satisfied by employing the control law (9).

Proof: Define a positive definite Lyapunov Function

$$V = s^T s \tag{2.2.14}$$

Its time derivative along the trajectory of the system (4) or (6) can be calculated as follows

$$\begin{aligned}
\dot{V} = \dot{s}^T s + s^T \dot{s} \; &= [x^T(t)A^T PB + x^T(t)H^T(\sigma)B^T PB + u^T(t)(I+E)^T B^T PB \\
&+ w^T(t)F^T(\sigma)B^T PB + g^T(t,x)B^T PB]B^T Px(t) \\
&+ x^T(t)PB[B^T PAx(t) + B^T PBH(\sigma)x(t) \\
&+ B^T PB(I+E)u(t) + B^T PBF(\sigma)w(t) + B^T PBHg(t,x)\;]
\end{aligned} \tag{2.2.15}$$

Published by WSEAS Press
www.wseas.org
ISBN: 978-960-474-050-5
ISSN: 1790-5117

$$= x^T(t)\left(A^T PBB^T P + PBB^T PA\right)x(t) + 2x^T(t)PBB^T PBH(\sigma)x(t)$$
$$+ 2x^T(t)PBB^T PB(I+E)u(t) + 2x^T(t)PBB^T PBF(\sigma)w(t) + 2x^T(t)PBB^T PBg(t,x).$$

A sufficient condition for the existence of a sliding mode is $\dot{V} = s^T \ \dot{s} < 0 \quad for \ \ s \neq 0$. The substitution of (9) into (14) yields

$$\dot{V} = x^T(t)\left(A^T\overline{P} + \overline{P}A\right)x(t) + 2s^T(t)B^T PBH(\sigma)x(t) - 2k\|x(t)\|s^T(t)B^T PB(I+E)\frac{s(t)}{\|s(t)\|}$$
$$- 2\delta s^T(t)B^T PB(I+E)\frac{s(t)}{\|s(t)\|} + 2s^T(t)B^T PBF(\sigma)w(t) + 2s^T(t)B^T PBg(t,x)$$
$$\leq x^T(t)\left(A^T\overline{P} + \overline{P}A\right)x(t) + 2h\lambda_{\max}\left(B^T PB\right)\|s(t)\|\|x(t)\| - 2k(1+\mu)\lambda_{\min}\left(B^T PB\right)\|x(t)\|\|s(t)\| \tag{2.2.16}$$
$$- 2\delta(1+\mu)\lambda_{\min}\left(B^T PB\right)\|s(t)\| + 2f\theta\lambda_{\max}\left(B^T PB\right)\|s(t)\| + 2g_0\lambda_{\max}\left(B^T PB\right)\|s(t)\|\|x(t)\|$$

Since

$$\|s(t)\| = \left\|B^T Px(t)\right\| \leq \left\|B^T P\right\|\|x(t)\| = \gamma\|x(t)\| \tag{2.2.17}$$

Hence

$$-\|x(t)\| \leq -\frac{1}{\gamma}\|s(t)\| = -\gamma_1\|s(t)\| \tag{2.2.18}$$

Then (16) becomes

$$\dot{V} = x^T\left(A^T\overline{P} + \overline{P}A\right)x(t) + 2h\lambda_{\max}(B^T PB)\|x(t)\|^2 - 2k\gamma_1(1+\mu)\lambda_{\min}(B^T PB)\|s(t)\|^2$$
$$+ 2g_0\gamma\lambda_{\max}(B^T PB)\|x(t)\|^2 - 2\delta\gamma_1(1+\mu)\lambda_{\min}(B^T PB)\|s(t)\| + 2f\theta\lambda_{\max}(B^T PB)\|s(t)\|$$
$$= x^T(t)\left[A^T\overline{P} + \overline{P}A + 2h\gamma\lambda_{\max}(B^T PB)I - 2k\gamma_1(1+\mu)\lambda_{\min}(B^T PB)\overline{P}\right.$$
$$\left. + 2g_0\gamma\lambda_{\max}(B^T PB)I\right]x(t) - 2\left[\delta(1+\mu)\lambda_{\min}(B^T PB) - f\theta\lambda_{\max}(B^T PB)\right]\|s(t)\|$$
$$= -x^T(t)\overline{Q}x(t) - 2\left[\delta(1+\mu)\lambda_{\min}(B^T PB) - f\theta\lambda_{\max}(B^T PB)\right]\|s(t)\| \tag{2.2.19}$$
$$\leq -\gamma_1^2 s^T(t)\overline{Q}s(t) - 2\left[\delta(1+\mu)\lambda_{\min}(B^T PB) - f\theta\lambda_{\max}(B^T PB)\right]\|s(t)\|$$
$$\leq -\gamma_1^2\lambda_{\min}(\overline{Q})\|s(t)\|^2 < 0$$

When conditions (12) and (13) of Lemma 1 are satisfied, inequality (19) reduces to $\dot{V} < 0$ and we conclude that stable sliding mode exists on all switching surfaces in dynamical uncertain system (4), (9), (10). Therefore, system is asymptotically stable relative to the sliding surface $s = C \ \ x = 0$.

According to equivalent control method [17, 26, 28, 29], the motion in the sliding mode may be determined from the defining condition $s = B^T Px(t) \equiv 0$. Differentiating with respect to time and inserting the value of $\dot{x}$ given in (6) gives $B^T PAx(t) + B^T PBu(t) + B^T PB\eta \equiv 0$. Hence, the equivalent control u_{eq} may be determined in the linear feedback form

$$u_{eq}(t) = -\left(B^T PB\right)^{-1} B^T P(Ax + B\eta) \tag{2.2.20}$$

Published by WSEAS Press
www.wseas.org
ISBN: 978-960-474-050-5
ISSN: 1790-5117

This control term is unavailable because of uncertain parameter η. But, u_{eq} for the nominal system can be presented as:

$$u_{eq}(t) = -\left(B^T PB\right)^{-1} B^T PAx(t) \tag{2.2.21}$$

where $G = \left(B^T PB\right)^{-1} B^T PA$ is the equivalent control feedback gain matrix. Substituting formally (17) into (6), we have

$$\left.\begin{aligned} \dot{x}(t) &= \left[I - B\left(B^T PB\right)^{-1} B^T P\right](Ax + B\eta) \\ B^T Px(t) &= 0 \end{aligned}\right\} \tag{2.2.22}$$

It is well known that sliding motion is insensitive to the total system uncertainty, if the invariance or matching conditions (5) are satisfied [16, 26, 28, 29, 36]. Then, $\left[I - B\left(B^T PB\right)^{-1} B^T P\right] B\eta(t,x) \equiv 0$.

Therefore, a sliding motion can be expressed as:

$$\dot{x}(t) = \left[I - B\left(B^T PB\right)^{-1} B^T P\right] Ax(t) = (A - GA)x(t) = A_{eq}x(t) \tag{2.2.23}$$

The transient motion of the system therefore consists of two independent stages: a) (preferable rapid) motion bringing the state of the system to the switching surface in which sliding occurs, and a slower sliding motion, in which the state goes towards the origin while remaining in the sliding subspace. In view of (23) it can be seen that the sliding motion was described by linear system equations. Sliding surface is to be designed to provide not only to guarantee the existence of stable motion, but also accomplishes the desired transients (such as given eigenvalue placement) in sliding mode. This problem successfully investigated in [28], [29], [45]-[47]. According to this design sliding surface method, by an appropriate choice of the gain matrix G, the eigenvalue of matrix A_{eq} in the linear sliding mode equation (23) may be arbitrarily placed because the pair (*A, B*) is completely state controllable. Moreover, note that this design of desired sliding motion problem may be solved via well known pole placement method of linear control system design theory. The present design techniques begins with a determination of the desired closed-loop poles based on the transient-response, such as speed, damping ratio, or bandwidth, as well as steady-state requirements. Let us assume that the desired closed-loop pole locations are $p = \lambda_1, \lambda_2, ...\lambda_n$ then the desired characteristic equation of closed-loop system becomes

$$\Phi(\lambda) = (p - \lambda_1)(p - \lambda_2).....(p - \lambda_n) = p^n + \alpha_1 p^{n-1} + ... + \alpha_{n-1} p + \alpha_n = 0 \tag{2.2.24}$$

Note that, $\Phi(A_{eq}) = 0$ since the Cayley-Hamilton theorem state that A_{eq} satisfied its own characteristic equation (24). According to the Ackermann's formula [48], [49], the state feedback gain matrix *G* may be determined as follows:

$$G = [0 \quad 0....0 \quad 1]\left[B \quad AB...A^{n-1} \quad B\right]^{-1} \Phi(A) \tag{2.2.25}$$

which is free from plant uncertainties.

We now examine the robust global asymptotical stability in large of the closed loop uncertain dynamical system (4), (9), (10). The following Theorem 1 provides our robust stability result.

Theorem 1: Suppose that Assumption 1, 2 and conditions of Lemma 1 are met. Then the uncertain system driven by combined min-max controller (9), (10) is asymptotically stable if the following conditions are satisfied:

Published by WSEAS Press
www.wseas.org
ISBN: 978-960-474-050-5
ISSN: 1790-5117

$$A^T P + PA + 2h\gamma I - 2k\gamma_1(1+\mu)PBB^T P + 2g_0\gamma I = -Q \tag{2.2.26}$$

where P and Q are positive definite matrices

$$\delta = \frac{f\theta}{1+\mu} \tag{2.2.27}$$

Proof: We define a Lyapunov function candidate as

$$V(t) = x^T(t)Px(t) \tag{2.2.28}$$

where $P > 0$ is a solution of algebraic Riccati equation (26)

The time derivative of V along the trajectory of system (4), (9), (10) can be evaluated similar to proofs of Lemma 1 as follows:

$$\begin{aligned}
\dot{V} &= \dot{x}^T(t)Px(t) + x^T(t)P\dot{x}(t) \\
&= x^T(t)\left(A^T P + PA\right)x^T(t) + 2x^T(t)PBH(\sigma)x(t) + 2x^T(t)PB(I+E)u(t) \\
&+ 2x^T(t)PBF(\sigma)w(t) + 2x^T(t)PBg(t,x) \\
&\le x^T(t)\left[A^T P + PA + 2h\gamma I - 2k\gamma_1(1+\mu)PBB^T P + 2g_0\gamma I\right]x(t) \\
&- 2\left[\delta(1+\mu) - f\theta\right]\|s(t)\| \\
&= -x^T(t)Qx(t) - 2\left[\delta(1+\mu) - f\theta\right]\|s(t)\| \le -\lambda_{\min}(Q)\|s(t)\|^2 < 0
\end{aligned} \tag{2.2.29}$$

if the conditions (26), (27) of Theorem 1 are satisfied then $\dot{V} < 0$. Thus, we conclude that the closed-loop trajectories of the uncertain system (4) or (6) under the action of the min-max controller (9), (10) is robustly asymptotically stable in large.

Note that, the conditions for the existence of the sliding motion and the conditions of robust stability in large are in accordance with each other or the conditions coincide. The conditions given by Lemma 1 and Theorem 1 in same cases, may state the sane information. But the condition given by Lemma 1 are derived from the Lyapunov function with respect to the switching variable *s(t)*. Where as the Lyapunov function given by Theorem 1 are written with respect to the state variable *x(t)*. In some cases these conditions may completely coincide. But this is very rare. If they coincide these design is said to be successful. This fact is another verification of our results. The Theorem 1 therefore proved.

Thus, we have successfully developed a new constructive sliding and stability condition for completely uncertain system driven by a simple min-max controller and present there conditions in term of matrix norm, which are different from the existing conditions in the literature. The matrix norm provides an easy application of the variable structure control. This is very advantageous for multivariable systems.

In order to reduce discontinuous control activity ("softening" the sliding mode) we should add nominal equivalent control term into the min-max controller (9), (10), which allows to make the sliding inequality less conservative and to reduce the amplitude of discontinuous term. Thus new modification of min-max controller can be presented as:

$$u(t) = -\left(B^T PB\right)^{-1} B^T PAx(t) - \left[k\|x(t)\| + \delta\right]\frac{s(t)}{\|s(t)\|} \tag{2.2.30}$$

Now, for the control law given by (30) we should derive the sliding and stability conditions. In general, these are similar to Lemma 1 and Theorem 1. In the next section we will derive the remaining conditions in term of variable structure control.

Published by WSEAS Press
www.wseas.org
ISBN: 978-960-474-050-5
ISSN: 1790-5117

2.2.5 Variable structure control

In this section we propose the following "softening" variable structure controller for the uncertain system (4) or (6):

$$u(t) = -\frac{1}{1+\mu}[CB]^{-1}[CAx(t) + R\Psi x(t) + \delta\ sign(s(t)) \tag{2.2.31}$$

where the elements Ψ_{ij} of the (m x n) dimensional matrix Ψ obey the following logical law

$$\Psi_{ij} = \begin{cases} \alpha_{ij} & for\ \ s_i x_j > 0 \\ \beta_{ij} & for\ \ s_i x_j < 0, \\ & i = 1,2..m,\ j = 1,2..n \end{cases} \tag{2.2.32}$$

$$s = Cx,\ C = B^T P \tag{2.2.33}$$

α_{ij} and β_{ij} are constant coefficients of the matrices α and β , R and δ are an (m x n) diagonal matrices with elements r_i and δ_i respectively, $sign(s) = [sign(s_1), sign(s_2), ...sign(s_m)]^T$.

Here VSC law usually [17-19, 24-26, 29] consist of a linear equivalent component u_{eq} (for the stabilization of a nominal regime), linear state feedback with switched gains component u_{NL} (for the rejection of a plant uncertainties) and a relay with constant gain u_R (for the rejection of a external disturbances) which are summed to form u_{Total} or multi-structural control[43].

First we consider the conditions for the existence of a stable sliding mode which can be generated in an uncertain system. Define a Lyapunov function with respect to variable s(t)

$$V = \frac{1}{2}s^T s \tag{2.2.34}$$

and differentiating along the (4), (31), (32)

$$\begin{aligned}
\dot{V} &= s^T \dot{s} = s^T[CAx(t) + CBH(\sigma)x(t) + CB(I+E)u(t) + CBF(\sigma)w(t) + CBg(t,x)] \\
&\le s^T[CAx + CBHx - CAx - R\Psi x - \delta sign(s) + CBF|\theta| + CBG|x|\ ] \\
&= s^T CBHx - \sum_{i=1}^{m}\sum_{j=1}^{n} s_i r_i \frac{\alpha_{ij}+\beta_{ij}}{2} x_j - \sum_{i=1}^{m}\left[\sum_{j=1}^{n} r_i \frac{\alpha_{ij}+\beta_{ij}}{2}|x_j + \delta_i|\right]|s_i| \\
&\quad + s^T CBF|\theta| + s^T CBG|x| \\
&= s^T CB\left[H + G - \frac{1}{2}R(\alpha+\beta)\right]x - \sum_{i=1}^{m}\sum_{j=1}^{n} r_i \frac{\alpha_{ij}+\beta_{ij}}{2}|s_i||x_i| - \sum_{i=1}^{m}\delta_i|s_i| + s^T CBF|\theta| \\
&= s^T \overline{H}x - \sum_{i=1}^{m}\sum_{j=1}^{n} r_i \frac{\alpha_{ij}+\beta_{ij}}{2}|s_i||x_i| + s^T \overline{F}|\theta| - \sum_{i=1}^{m}\delta_i|s_i|,
\end{aligned} \tag{2.2.35}$$

where $\overline{H} = CB\left[H + G - \frac{1}{2}R(\alpha+\beta)\right]$,

$\overline{F} = CBF$, $|\theta| = [|\theta_1|, |\theta_2|, ...|\theta_m|]^T$, $|g(t,x)| \le G|x|$, g_{ij} are positive constants, $|x| = [|x_1|, |x_2|, ...|x_n|]^T$, $-\|I + E(\sigma)\| \le -(1+\mu)$. Form (35) as shown in [41-44] we conclude that, if

$$r_i \frac{\alpha_{ij}+\beta_{ij}}{2} \ge \max_{ij}, \max_j |\overline{h}_{ij}|,\quad i = 1,2....m,\ j = 1,2....n \tag{2.2.36}$$

$$\delta_i \ge |\overline{\theta}_i|,\quad i = 1,2,....m \tag{2.2.37}$$

Published by WSEAS Press
www.wseas.org
ISBN: 978-960-474-050-5
ISSN: 1790-5117

are satisfied then $\dot{V} < 0$ everywhere outside of the sliding surface $s = 0$. Here $\overline{h}_{ij}$ are elements of matrix $\overline{H}, \overline{F}|\theta| = |\overline{\theta}||\overline{\theta}|$ is constants vector with elements $\overline{\theta}_i$. Thus, the following Lemma 2 summarizes our results.

Theorem 2: Suppose that Assumptions 1, 2 and the conditions given in (35), (36) are valid, then a stable sliding mode, driven by the VSC (31), (32) always exist in uncertain system (6).

And now we will study the robust asymptotic stability in the large with respect to the state variables.

Corollary 1: The uncertain variable structure system (6), (31)-(33) with stable sliding mode(23) is asymptotically stable in large if the sliding conditions (36), (37) of Theorem 2 are satisfied.

Proof: Choose a Lyapunov function candidate with respect to the state variable *x(t),* as follows:

$$V(t) = \frac{1}{2} x^T(t) \overline{P} x(t) \tag{2.2.38}$$

where $\overline{P} = PBB^T P, \overline{P}^T = \overline{P}$ is a positive semi-definite matrix.

Then

$$\begin{aligned} \dot{V} &= x^T PBB^T P\dot{x} = s^T B^T P\dot{x} \\ &= s^T C\dot{x} \le s^T \overline{H}x - \sum_{i=1}^{m}\sum_{j=1}^{n} r_i \frac{\alpha_{ij} + \beta_{ij}}{2} |s_i||x_j| + s^T \overline{F}|\theta| - \sum_{i=1}^{m} \delta_i |s_i|. \end{aligned} \tag{2.2.39}$$

and we have the same results as (35). So, if the conditions (36), (37) are satisfied, then $\dot{V} < 0$. Therefore, VSS (6), (31)-(33) is robustly asymptotically stable in large. Note that, the conditions of the robust stability fully coincide with the conditions for the existence of sliding mode in the VSS. As it was stated in section IV these conditions may or may not coincide. This depends on the selected Yaupon function candidate. We successfully select the Yaupon function candidate as in (38).

Thus, we have solved the design problem to the end. Because we have derived a new sliding and stability condition for the uncertain systems with parameter perturbations and external disturbances by applying a new variable structure controller. Our design results are presented in terms of matrix norm, which is different from the known results given in literature.

2.2.6. Longitudinal flight control

According to the design procedure of VSC in section V we consider the longitudinal flight control for F-18, which has two control inputs and two output variables. This is a typical plant model of F-18 (38). Our theoretical development of previous sections will be implemented on this model. It is assumed that the system states α and q are available so that state estimation is not required.

For the longitudinal motion the tracking error is denoted as α_e *(t)* and w_e *(t)*

$$\alpha(t) - \alpha_r(t) = \alpha_e(t); q(t) - q_r(t) = q_e(t) \tag{2.2.40}$$

Where α_r *(t)* and o_r *(t)* are reference trajectories. From (1), the tracking error dynamics and VSC law have the following form

$$\begin{bmatrix} \dot{\alpha}_e(t) \\ \dot{q}_e(t) \end{bmatrix} = A_{long} \begin{bmatrix} \alpha_e(t) \\ q_e(t) \end{bmatrix} + B_{long} \begin{bmatrix} \delta_E(t) \\ \delta_{PTV}(t) \end{bmatrix} + \begin{bmatrix} \dot{\alpha}_r(t) \\ \dot{q}_r(t) \end{bmatrix} - A_{long} \begin{bmatrix} \alpha_e(t) \\ q_r(t) \end{bmatrix} \tag{2.2.41}$$

$$\begin{bmatrix} u_1(t) \\ u_2(t) \end{bmatrix} = \begin{bmatrix} \delta_E \\ \delta_{PTV} \end{bmatrix} = -\frac{1}{1+\mu} \left[CB_{long}^{nom} \right]^{-1}$$

$$\left\{ \begin{bmatrix} \overline{a}_{11}\alpha_e(t) + \overline{a}_{12} q_e(t) \\ \overline{a}_{21}\alpha_e(t) + \overline{a}_{22} q_e(t) \end{bmatrix} + \begin{bmatrix} r_1 & 0 \\ 0 & r_2 \end{bmatrix} \begin{bmatrix} \Psi_{11} & \Psi_{12} \\ \Psi_{21} & \Psi_{22} \end{bmatrix} \begin{bmatrix} \alpha_e(t) \\ q_e(t) \end{bmatrix} + \begin{bmatrix} \delta_1 & 0 \\ 0 & \delta_2 \end{bmatrix} \begin{bmatrix} sign(s_1(t)) \\ sign(s_2(t)) \end{bmatrix} \right\} \tag{2.2.42}$$

Published by WSEAS Press
www.wseas.org
ISBN: 978-960-474-050-5
ISSN: 1790-5117

$$\begin{bmatrix} s_1(t) \\ s_2(t) \end{bmatrix} = \left(B^{T\,nom}_{long} P\right) \begin{bmatrix} \alpha_e(t) \\ q_e(t) \end{bmatrix} = \begin{bmatrix} c_{11}\alpha_e(t) + c_{12} q_e(t) \\ c_{21}\alpha_e(t) + c_{22} q_e(t) \end{bmatrix} \tag{2.2.43}$$

Where

$$C = B^{nom}_{long} P = \begin{bmatrix} c_{11} & c_{12} \\ c_{21} & c_{22} \end{bmatrix}, \quad CA^{nom}_{long} = \begin{bmatrix} \bar{a}_{11} & \bar{a}_{12} \\ \bar{a}_{21} & \bar{a}_{22} \end{bmatrix}, \quad A^{T\,nom}_{long} P + PA^{T\,nom}_{long} = -\begin{bmatrix} q_1 & 0 \\ 0 & q_2 \end{bmatrix} \tag{2.2.44}$$

$$\Psi_{11} = \begin{cases} \alpha_{11} \;\; for \;\; s_1(t)\alpha_e(t) > 0 \\ \beta_{11} \;\; for \;\; s_1(t)\alpha_e(t) < 0 \end{cases}, \qquad \Psi_{12} = \begin{cases} \alpha_{12} \;\; for \;\; s_1(t)\alpha_e(t) > 0 \\ \beta_{12} \;\; for \;\; s_1(t)\alpha_e(t) < 0 \end{cases}$$

$$\Psi_{21} = \begin{cases} \alpha_{21} \;\; for \;\; s_2(t)\alpha_e(t) > 0 \\ \beta_{21} \;\; for \;\; s_2(t)\alpha_e(t) < 0 \end{cases}, \quad \Psi_{22} = \begin{cases} \alpha_{22} \;\; for \;\; s_2(t)\alpha_e(t) > 0 \\ \beta_{22} \;\; for \;\; s_2(t)\alpha_e(t) < 0 \end{cases}, \tag{2.2.45}$$

Note that, for the position control $\alpha_r(t)= \alpha_d(t)=const$, $q_r(t)= q_d(t)=const$, therefore $\dot{\alpha}_d = 0, \dot{q}_d = 0$. According to Theorem 2 and Corollary 1, the following conditions must be satisfied for the existence of a stable sliding mode.

$$\left.\begin{aligned} & r_1 \frac{\alpha_{11} - \beta_{11}}{2} \geq h^* \\ & r_1 \frac{\alpha_{12} - \beta_{12}}{2} \geq h^* \\ & r_2 \frac{\alpha_{21} - \beta_{21}}{2} \geq h^* \\ & r_2 \frac{\alpha_{22} - \beta_{22}}{2} \geq h^* \end{aligned}\right\} \tag{2.2.46}$$

$$\bar{\delta}_1 \geq \theta_1 \;;\; \bar{\delta}_2 \geq \theta_2 \tag{2.2.47}$$

where $h^* = \max_i \max_j \left|\bar{h}_{ij}\right|, \; i = 1,2; \; j = 1,2;$

$$\bar{H} = \begin{bmatrix} c_{11} & c_{12} \\ c_{21} & c_{22} \end{bmatrix} \begin{bmatrix} b^{nom}_{11} & b^{nom}_{21} \\ b^{nom}_{21} & b^{nom}_{22} \end{bmatrix} \begin{bmatrix} h_{11} & h_{12} \\ h_{21} & h_{22} \end{bmatrix} + \begin{bmatrix} g_{11} & g_{12} \\ g_{21} & g_{22} \end{bmatrix} - \frac{1}{2} \begin{bmatrix} r_1 & 0 \\ 0 & r_2 \end{bmatrix} \begin{bmatrix} \alpha_{11} + \beta_{11} & \alpha_{12} + \beta_{12} \\ \alpha_{21} + \beta_{21} & \alpha_{22} + \beta_{22} \end{bmatrix} \tag{2.2.48}$$

$$\begin{bmatrix} \theta_1 \\ \theta_2 \end{bmatrix} = \begin{bmatrix} \bar{f}_{11} & \bar{f}_{12} \\ \bar{f}_{21} & \bar{f}_{22} \end{bmatrix} \begin{bmatrix} \theta_1 \\ \theta_2 \end{bmatrix} \tag{2.2.49}$$

2.2.7 Simulation results

The complete closed–loop system (41), (45) is simulated using MATLAB. The block diagram is shown in (1.). the system matrices A is assumed in the form of $A=A^{nom}+\Delta A$, where ΔA is the uncertainty matrix with random elements.

The controller design parameters are selected so that they obey the rules given by (44),(45),(46) and (47). Obviously infinite number of parameters set is possible. Three groups of parameters are listed in Table1, 2 and 3 and named as case 1, case 2 and case 3 respectively. These parameters are selected intuitively and then checked whether they obey the above rules.

Step inputs are applied for both reference signals. The outputs $q(t)$, $\alpha(t)$ are shown in Fig 2.a), 3.a), 4.a). The aircraft control inputs are shown in Fig 2.b), 3.b), 4.b). The error responses $q_e(t)$, $\alpha_e(t)$ are shown in Fig 2.c), 3.c), 4.c).The switching functions plot are shown in Fig 2.d), 3.d), 4.d). Fig.2, Fig.3, Fig.4 represent case 1, case 2, case 3 respectively. As it is seen from the figures error responses are in an acceptable range for the three cases. Fig.2, Fig.3 and Fig.4 reveal that the switching variable $s(t)$

Published by WSEAS Press
www.wseas.org
ISBN: 978-960-474-050-5
ISSN: 1790-5117

decreases very rapidly and reaches the sliding surface in a few seconds, which is in agreement with the reaching law for our multivariable case, given by (11k). Chattering exists for case 1 and case 2 and the system is free of chattering for case 3. Note that, we form the sliding mode controllers such that by varying the coefficient of "importance" of each term $u_{eg}(t)$, $u_{min\text{-}max}(t)$ and $u_{NL}(t)$, we may reduce discontinuous control activity. So, it is possible to guarantee sliding motion with chattering and also free of chatting. Decreasing the value of design parameters r_1, r_2 and δ_1, δ_2 we may completely eliminate chattering effect. The disadvantages of this particular type of control law become apparent during the physical implementation. It is imperative that the switching of the control takes place at a very high frequency but the real plant may not tolerate such behavior at the input. In same cases control chattering is absolutely impractical for controlling deflections of aerodynamic surfaces and thrust vector. However, a small chattering effect with low frequency or with high frequency but different from natural frequencies of the plant and actuators $w_n(w_{switch} \neq w_{natural})$ may be in same cases useful. But all parts of space vehicle vibrate, and small chattering with minimum energy dissipations keeps the plant always in active position "tenacious of life". This may increase the system reliability in a sense. This is very important for space control systems. On the other hand actuators (hydraulic and pneumatic) in aircraft control systems are in general, has first or second order dynamics. This will weaken the high frequency components which exist due the switching effects. Thus, the average of the control signal is converted to nearly a continuous from while it passes through the actuators.

It is well known that pneumatic and hydraulic actuators can coop with the chattering phenomena. For instance set of pneumatic sliding mode controllers can work well with the real dynamic plants with diaphragm actuators [47], [55]. An electro hydraulic velocity servo control system using the integral variable structure controller approach was successfully illustrated in [56]. Simulation results show that VSC can achieve accurate servo tracking and is fairly robust to plant parameter variations and external load disturbances. A second order sliding mode

Table 1. Case 1 design parameters	Table 2. Case 2 design parameters
$Q=\begin{bmatrix}0.1 & 0\\ 0 & 0.1\end{bmatrix}$ $\alpha=\begin{bmatrix}40 & 40\\ 40 & 40\end{bmatrix}$	$Q=\begin{bmatrix}0.1 & 0\\ 0 & 0.1\end{bmatrix}$ $\alpha=\begin{bmatrix}30 & 30\\ 30 & 30\end{bmatrix}$
$\theta=\begin{bmatrix}0.1\\ 0.1\end{bmatrix}$ $\beta=\begin{bmatrix}-20 & -20\\ -20 & -20\end{bmatrix}$	$\theta=\begin{bmatrix}0.32\\ 0.32\end{bmatrix}$ $\beta=\begin{bmatrix}-15 & -15\\ -15 & -15\end{bmatrix}$
$G=\begin{bmatrix}0.1 & 0\\ 0 & 0.1\end{bmatrix}$ $\delta=\begin{bmatrix}-0.22\\ -0.07\end{bmatrix}$	$G=\begin{bmatrix}0.1 & 0\\ 0 & 0.1\end{bmatrix}$ $\delta=\begin{bmatrix}-0.22\\ -0.07\end{bmatrix}$
$C=\begin{bmatrix}1.96 & 9.74\\ 0.54 & 2.78\end{bmatrix}$ $F=\begin{bmatrix}0.1\\ 0.1\end{bmatrix}$	$C=\begin{bmatrix}1.96 & 9.74\\ 0.54 & 2.78\end{bmatrix}$ $F=\begin{bmatrix}0.1\\ 0.1\end{bmatrix}$
$P=\begin{bmatrix}0.33 & 1.05\\ 1.05 & 5.36\end{bmatrix}$ $\mu=0.081$ $g_0=1$	$P=\begin{bmatrix}0.33 & 1.05\\ 1.05 & 5.36\end{bmatrix}$ $\mu=0.081$ $g_0=1$
r_1=1 r_2=2 h^*=0.97	r_1=1.5 r_2=2.5 h^*=0.97

Published by WSEAS Press
www.wseas.org
ISBN: 978-960-474-050-5
ISSN: 1790-5117

practical implementations in aircraft control was successfully implemented in [57]. One must recall that existence of chattering in control systems guarantees the robustness. Therefore, one usually does not prefer to completely remove the chattering. Compromises have to be made between the robustness and chattering effects.

A general way to avoid chattering effects is a smooth approximation of the signum- function [9], [52] i.e., by replacing *sign(s(t))* by *sat(s(t))* we have

$$sat = \left(\frac{s(t)}{\phi}\right) = \begin{cases} \frac{1}{\phi}s(t) & if\ \|s(t)\| \le \phi \\ sign(s(t)) & if\ \|s(t)\| > \phi \end{cases} \tag{2.2.41}$$

Where ϕ is small boundary layer thickness.

So by continuous approximation of discontinuous control law it is possible to form a quasi-sliding motion with free of chattering. Sliding and stability properties of a continuous implementation of variable structure control in which signum nonlinearity is approximated by saturation nonlinearity is studied in [58]. Note that this result which was derived for linear systems are also valid for our case. Another reduction of chatting in variable structure control systems has analyzed in [59].

The main feature of this approach consists of an increase in the order of the sliding regime and of the introduction of an approximate control which asymptotically converges to the ideal sliding mode.

Table 3. Case 3 design parameters	
$Q = \begin{bmatrix} 0.1 & 0 \\ 0 & 0.1 \end{bmatrix}$	$\alpha = \begin{bmatrix} 30 & 30 \\ 30 & 30 \end{bmatrix}$
$\theta = \begin{bmatrix} 0.51 \\ 0.51 \end{bmatrix}$	$\beta = \begin{bmatrix} -15 & -15 \\ -15 & -15 \end{bmatrix}$
$G = \begin{bmatrix} 0.1 & 0 \\ 0 & 0.1 \end{bmatrix}$	$\delta = \begin{bmatrix} -0.61 \\ -0.75 \end{bmatrix}$
$C = \begin{bmatrix} 1.96 & 9.74 \\ 0.54 & 2.78 \end{bmatrix}$	$F = \begin{bmatrix} 0.1 \\ 0.1 \end{bmatrix}$
$P = \begin{bmatrix} 0.33 & 1.05 \\ 1.05 & 5.36 \end{bmatrix}$	$\mu = 0.012$ $g_0 = 1$
r_1=0.5 r_2=1	h^*=0.97

In practical realizations, the chattering problem must be treated by examining the dynamic characteristics and physical situation of each plant. The effect of varying design parameters on closed loop system performance was not studied analytically in this work. Optimization of design parameters will be examined in a separate work. Preliminary results of this study were presented in [60]-[62].

2.2.8 Conclusions

A robust flight control system was investigated via variable structure and Lyapunov function for simplified F-18 model. Two types of feedback controllers: MMC and VSC for MIMO systems with matching plants uncertainties, and input nonlinearity and external disturbances were considered. For both cases the existence conditions of a stable sliding mode and the robust asymptotic stability in large of uncertain MIMO systems by MMC and VSC were investigated. For the derivation of the control law, a suitable sliding surface was chosen such that the zero dynamic of the closed-loop system are

Published by WSEAS Press
www.wseas.org
ISBN: 978-960-474-050-5
ISSN: 1790-5117

asymptotically stable in the sliding regime. These results were applied to design of a longitudinal flight variable structure controller for the F-18 aircraft model. Simulation results were presented to show the effectiveness of the design methods. The values of design parameters greatly affect the existence of chattering. Optimization of these parameters will be studied in another work. This includes classical optimization techniques and optimization via fuzzy control algorithms.

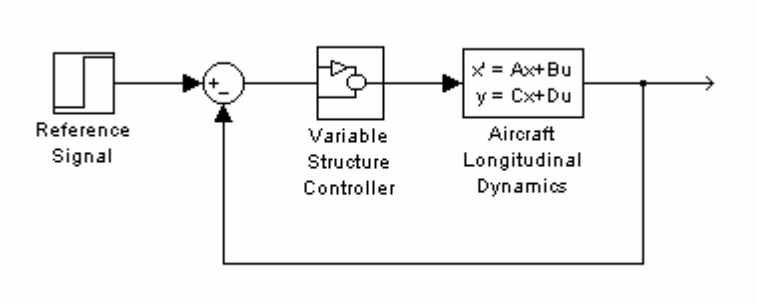

Figure 2.1 Block Diagram of the aircraft VSC system

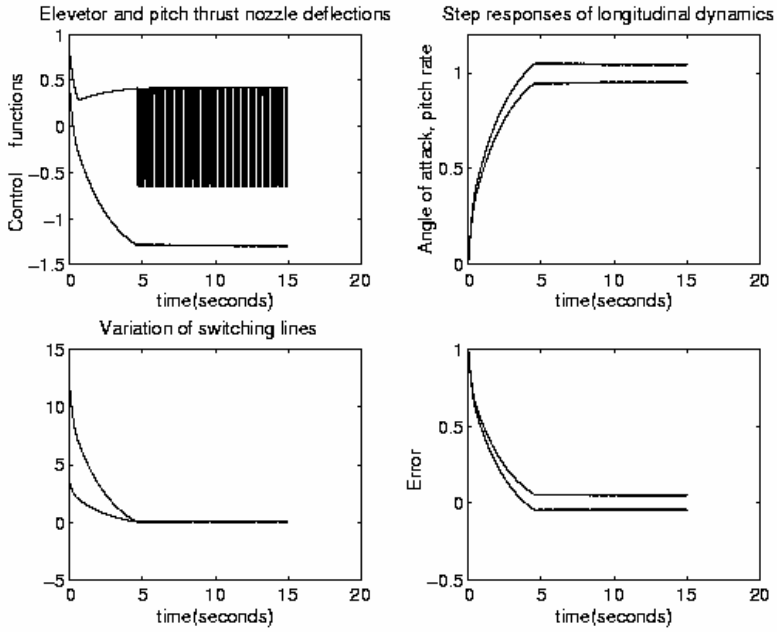

Figure 2.2 Step response of the case 1 system

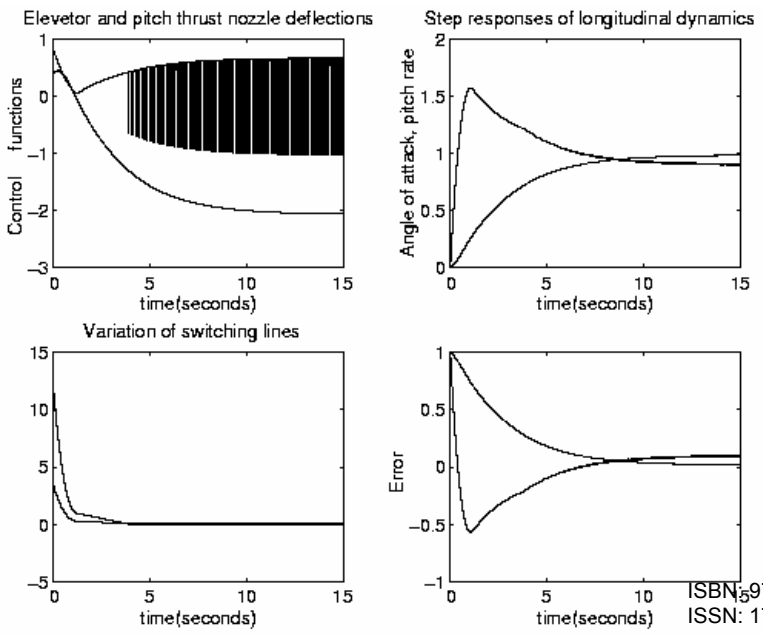

ISBN: 978-960-474-050-5
ISSN: 1790-5117

Figure 2.3 Step response of the case 2 system

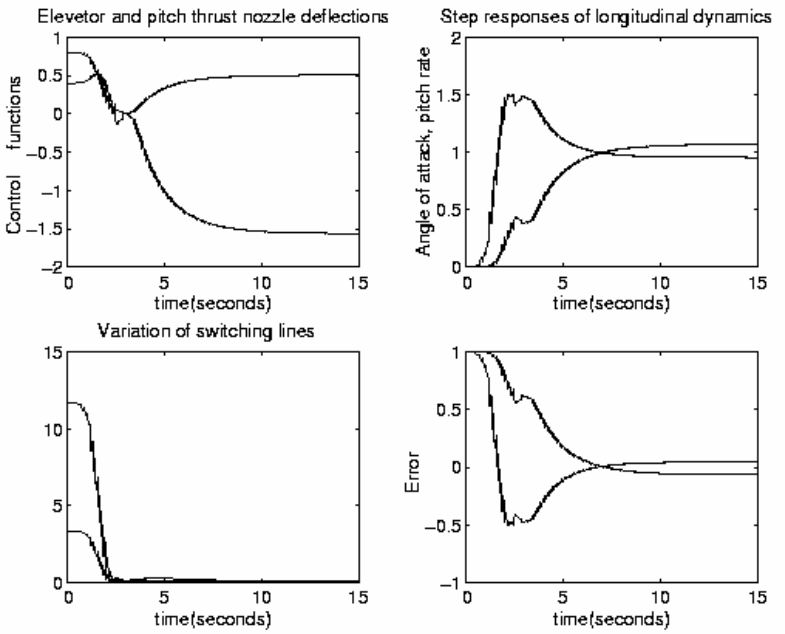

Figure 2.4 Step response of the case 3 system

2.3 Design of output integral sliding mode controllers for guided missile system with unmatched parameter perturbations

In this paragraph, the guided missile system is considered as SISO plant with parameter perturbations. The structure of the missile system examined in this work is not suitable for the use of classical linear controllers. On the other hand the missile system should possess good performances, such as zero steady state error, less settling time etc. Standard VSC control laws fail to control the steady state error due to the structure of the system matrices. For this reason we have proposed two new robust output integral sliding mode controllers and design procedures. An integrator is included in the sliding function, which results the reduction and removal of the output error. The total control consists of two parts: 1) equivalent control part which compensates the nominal regime of the missile system and 2) VSC part which compensates the parameter perturbations (changes in Mach number, altitude and mass of the vehicle etc) of missile system. We have derived a new constructive sliding and stability conditions for both cases by using Lypunov's direct method. Computer simulations indicate that this approach yields a satisfactory control performance.

2.3.1 Introduction

In recent years the sliding mode control has been successfully applied to the missile control systems. In (Brierley and Longchamp, 1990)[63] a sliding mode control law has been derived for a nonlinear system which corresponds to an air to air missile-target interception process. The performance of the feedback controller was evaluated and shown to be robust to certain parameter variations. The advantages and disadvantages of chattering phenomenon which appears in missile control systems have been analyzed. In (Kim and Song, 1998)[64] an adaptive nonlinear control design technique was applied to the pitch acceleration controller for an aerodynamically controlled missile model. A nonlinear model with unknown parameters and uncertainties was used for missile motion. In (George et. al, 1998) [65] a variable structure controller was designed for the pitch plane dynamics of a flight vehicle. A discontinuous control law was synthesized by applying Lyapunov function to ensure that a sliding mode exists on the switching surface. However, this leads to the chattering phenomenon. The conventional approach to eliminate chattering was to use a continuous control signal instead of the ideal control based on the signum function. Here, a signum function was approximated by the

Published by WSEAS Press
www.wseas.org
ISBN: 978-960-474-050-5
ISSN: 1790-5117

hyperbolic tangent function. This implementation requires the computation of the equivalent feedback gain.
In this paragraph, the guided missile system is considered as SISO plant with parameter perturbations. This model has been taken from (Hartman and Grebing, 1990) [66]. The missile and aircraft control system is investigated according to the sliding mode control theory (Utkin, 1992; Young, 1993; Garafalo and Galielmo, 1996; Edwards and Spurgeon, 1998; Mita et al., 1996; Gessing, 1998; Jafarov and Tasaltin, 1998; Jafarov and Tasaltin, 1999; Jafarov and Tasaltin, 2000; Levant et al., 1999) [67]-[76]. Various missile systems are controlled by using the classical linear controllers (Blakelock, 1991) [77]. The structure of the missile system examined in this work is not suitable for the use of classical linear controllers due to wide range of parameter variations. On the other hand the missile system should possess good performances, such as zero steady state error, less settling time etc. Standard VSC control laws fail to control the steady state error due to the structure of the system matrices. For this reason we have proposed two new robust output integral sliding mode controller design procedures. An integrator is included in the sliding function, which results the reduction and removal of the output error. The total control consists of two parts: 1) equivalent control part which compensates the nominal regime of the missile system and 2) VSC part which compensates the parameter perturbations (changes in Mach number, altitude and mass of the vehicle etc) of missile system. We have derived a new constructive sliding and stability conditions for both cases by using Lypunov's direct method. Computer simulations indicate that this approach yields a satisfactory control performance.
This paragraph is organized as follows: Description of missile dynamic is given in section 2. The output sliding mode control law is derived in section 3. A simplified and a complete design procedure are investigated in that section. Section 4 summarizes the simulation results of the missile control system. Section 5 contains the major conclusions arrived at in the paper.

2.3.2 Description of missile dynamics

It is desired to control the vertical acceleration of a rigid guided missile over different operating conditions. The missile is open loop stable, but has insufficient damping and has non-minimum phase transfer function. The guided missile model described in this section is based upon a modified version that is given in (Hartman and Grebing, 1990) [66]. The behavior of rigid body guided missile may be described as follows:

$$\dot{x}(t) = (A + \Delta A)x(t) + bu(t) \tag{2.3.1}$$

$$y(t) = c^T(t)x(t) \tag{2.3.2}$$

$$e(t) = y(t) - y_{ref} \tag{2.3.3}$$

where $x(t) \in R^3$, x(t) is the state variable, *u(t)* is the scalar control input, *y(t)* is the controlled scalar output variable, *e(t)* is the scalar output error:

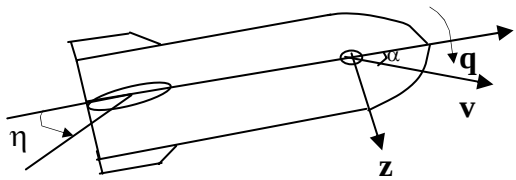

Fig.1 Notation used to describe missile

u= elevator command (radians)
y= vertical acceleration ($m/\sec^2$) (a_z in Fig.1)
x_1= pitch rate (radians/sec), (Δq in Fig.1)
x_2 = angle of attack (radians), ($\Delta\alpha$ in Fig.1)

Published by WSEAS Press
www.wseas.org
ISBN: 978-960-474-050-5
ISSN: 1790-5117

x_3 = elevator deflection angle (radians), ($\Delta\eta$ in Fig.1)

e= error between output and desired set point y_{ref}

A and ΔA are nominal system matrix and parameter variation matrix, respectively. It is desired to find a controller to control the vertical acceleration *y* subject to the following conditions:

1) For a set point change in y_{ref} , the % overshoot in $y \le 10\%$, and the steady-state error $\le 5\%$

2) The elevator deflection angle x_3 should be limited to $|x_3| \le 20^0$. The elevator deflection angle rate $\dot{x}_3$ should be limited to $|\dot{x}_3| \le 600^0/\sec$.

3) The above control specifications have to be satisfied for ten given operating conditions (which depend on Mach number, altitude and mass of the vehicle). In this vehicle, the pitch rate x_1 can be measured and used for control purpose.

The data for this problem is given as follows:

$$\overline{A} = A + \Delta A = \begin{bmatrix} a_{11} & a_{12} & b_1 \\ 1 & a_{22} & b_2 \\ 0 & 0 & -190 \end{bmatrix},\ b = \begin{bmatrix} 0 \\ 0 \\ 190 \end{bmatrix},\ c^T = [c_{11} \quad c_{12} \quad d_1] \qquad (2.3.4)$$

where $a_{11}, a_{12}, a_{22}, b_1, b_2, c_{11}, c_{12}, d_1$ are given in Table 1 for ten different operating conditions. The nominal values of A,b,c can easily be determined from the table.

2.3.3 Output integral sliding mode controllers

By employing SMC theory, we will treat a robust sliding mode controller for a missile system with uncertain parameters. For robust stabilization of missile systems, we propose two new output integral sliding mode controllers, to increase the system performance, namely, to remove the steady state error, and to reduce the settling time. In other words to provide high precision of missile control system we introduce an integrator into the sliding surface in the control law. To solve this problem we need to make the following standard assumptions.

Assumption 1: ΔA is bounded

$$\beta_1 = \min_{\sigma} \|\Delta A(\sigma)\| \le \|\Delta A(\sigma)\| \le \max_{\sigma} \|\Delta A(\sigma)\| = \beta \qquad (2.3.5)$$

where β and β_1 are given constants.

Assumption 2: Rate of output parameter variations is very small or

$$\dot{c}(t) = 0, \quad \ddot{c}(t) = 0 \qquad (2.3.6)$$

a) Simplified Design

We select the following combining sliding mode controller with dynamic equivalent controller

$$u(t) = u_{eq}(t) - u_{VSC}(t) \qquad \text{or} \qquad u(t) = u_{eq}(t) - k\,\|x(t)\|\,sign(s(t)) \qquad (2.3.7)$$

where is the equivalent control for the nominal system, k is the scalar feedback gain that is to be selected by the designer, $\|x(t)\| = \sqrt{x^T x}$ is the Euclidean norm of the vector *x(t)* . Introducing the integral error which characterizes the mismatch between the measured output variable and its set point for nominal system

$$e_1 = e = \int [c^T(t)x(t) - y_{ref}]dt$$

$$e_2 = \dot{e}_1 = \mathrm{c}^{\mathrm{T}}(t)x(t) - y_{ref}$$

$$e_3 = \dot{e}_2 = c^T(t)Ax(t) + c^T(t)bu(t) \qquad (2.3.8)$$

and we define a switching variable as

$$s(t) = a_1 e_1 + a_2 e_2 + a_3 e_3, \quad a_3 = 1 \qquad (2.3.9)$$

Published by WSEAS Press
www.wseas.org
ISBN: 978-960-474-050-5
ISSN: 1790-5117

where a_1, a_2 are to be selected so that the following polynomial is stable (Mita et al., 1996) [71]

$$q^2 + a_2 q + a_1 = 0 \tag{2.3.10}$$

According to the equivalent control method (Utkin, 1992) [67], we can get $u_{eq}(t)$ for the nominal system by differentiating *s(t)* with respect to time

$$\dot{s}(t) = (a_1 c^T + a_2 c^T A + c^T A^2)x(t) + (a_2 c^T b + c^T Ab)u(t) + cb^T \dot{u}(t) - a_1 y_{ref} = 0 \tag{2.3.11}$$

Hence, we have the dynamic equivalent control in the form of the first order system with right side

$$\begin{aligned}\dot{u}_{eq}(t) &= -(c^T b)^{-1}(a_2 c^T b + c^T Ab)u_{eq}(t) \\ &\quad -(c^T b)^{-1}(a_1 c^T b + a_2 c^T A + c^T A^2)x(t) + (c^T b)^{-1} a_1 y_{ref}\end{aligned} \tag{2.3.12a}$$

or in form of Laplace transform

$$\begin{aligned}U_{eq}(s) &= (a_2 c^T b + c^T Ab + c^T bs)^{-1}(a_1 c^T + a_2 c^T A + c^T A^2)X(s) \\ &\quad + (a_2 c^T b + c^T Ab + c^T bs)^{-1} a_1 y_{ref}\end{aligned} \tag{2.3.12.b}$$

Therefore, we construct the integral output sliding mode control as in (7), (9), (12) to ensure the high performance control. After selecting the sliding mode control with integral switching surface *s(t)=0* the next step is to choose the design parameter k such that the sufficient condition for the existence of a sliding mode

$$s(t)\dot{s}(t) < 0 \tag{2.3.13}$$

is satisfied and the closed loop sliding system is stable.

Lemma 1: Suppose that Assumptions 1,2 are hold, then the stable sliding motion on switching surface *s(t)=0* (9) is always generated in missile system (1), (2), (3) driven by autopilot-controller (7), (9), (12), if the condition

$$k \geq \frac{(a_2 + 2\alpha + \beta)\beta_1}{\gamma\beta_1} \tag{2.3.14}$$

is satisfied

Proof: Define a positive definite Lyapunov function

$$V(t) = \frac{1}{2}s^2(t) \tag{2.3.15}$$

and its time derivative along the trajectory of the control system with unmatched uncertainties (1), (2), (3), (7), (9), (12). Then $\dot{V}(t)$ can calculated as follows

$$\begin{aligned}\dot{V}(t) &= \dot{s}(t)s(t) = s(t)[(a_1 c^T + a_2 c^T A + c^T A^2)x(t) - a_1 y_{ref} + (a_2 c^T b + c^T Ab)u_{eq}(t) + c^T b\dot{u}_{eq}(t)] \\ &+ s(t)[(a_2 c^T \Delta A + c^T A\,\Delta A + c^T \Delta A\, A + c^T \Delta A^2)x(t) + c^T\,\Delta A\, bu_{vsc}(t) \\ &= s(t)[(a_2 c^T \Delta A + c^T A\,\Delta A + c^T \Delta A\, A + c^T \Delta A^2)x(t) - c^T \Delta Abk \,\|\, x(t) \,\|\, sign(s(t))] \\ &\leq |\, s(t)\,|\,[a_2 \,\|\, c \,\|\, \beta + \|\, c \,\|\, \alpha\beta + \|\, c \,\|\, \alpha\beta + \|\, c \,\|\, \beta^2]\,\|\, x(t) \,\| - \|\, c \,\|\, \beta_1 \gamma k \,\|\, x(t) \,\|\,|\, s(t)\,| \\ &= \|\, c \,\|\, [\beta(a_2 + 2\alpha + \beta) - k\gamma]\,|\, s(t)\,|\,\|\, x(t) \,\| < 0\end{aligned} \tag{2.3.16}$$

where

$$\alpha = \|\, A \,\|; \gamma = \|\, b \,\|$$

Inequality (16) is written with the aid of $s(t)sign(s(t)) = |\, s(t)\,|$. In view of (16), if the condition (13) is satisfied then (16) reduces to $s(t)\dot{s}(t) < 0$ for $s(t) \neq 0$ and $x(t) \neq 0$ Therefore, we conclude that

Published by WSEAS Press
www.wseas.org
ISBN: 978-960-474-050-5
ISSN: 1790-5117

the robust stable sliding motion is always generated in the missile system. Moreover, it follows from (9) that *s(t)=0* causes $e(t) \to 0$ and $e \to 0$ since (10) is stable.

b) Complete Design

In the previous section we have designed the reduced integral sliding mode controller for missile system with unmatched perturbations. The method is sufficient to obtain the desirable control performance but it is not straightforward in the design procedure sense. Therefore, below we propose another type of sliding mode controller and design procedure. A design method has been considered for sliding mode control in the space of output error variable and its derivatives for the time invariant system in [67]. Here, we generalize this design method for the system with model uncertainties. First, we describe the original system (1), (2), (3) in terms of output error variable and its derivatives. Introducing

$$\begin{aligned} e_1 &= e(t) = \int \left[c^T(t)x(t) - y_{ref}\right]dt \\ \dot{e}_1(t) &= e_2(t) = c^T x(t) - y_{ref} \\ \dot{e}_2(t) &= e_3(t) = c^T Ax(t) + c^T bu(t) \\ e_3(t) &= c^T A^2 x(t) + c^T Abu(t) + c^T b\dot{u} \end{aligned} \tag{2.3.17}$$

Switching surface is defined in the form of (9). The transformed system (17) includes the time derivative of control input, hence we introduce the following dynamic system [67]

$$\begin{aligned} u(t) &= u_1(t) \\ u_1(t) &= u_2(t) = \lambda u_1(t) + v(t) \end{aligned} \tag{2.3.18}$$

where v is the discontinuous function of output error, and just introduced state variables u_1, u_2 are assumed to be measurable. The coefficient λ may be arbitrarily chosen so as to facilitate the realization. Again, we determine the equivalent control for nominal system (17) from $\dot{s} = 0$: calculating $\dot{s}$ from (9) and substituting (17), we have

$$\begin{aligned} \dot{s}(t) &= a_1 c^T x(t) - a_1 y_{ref} + a_2 c^T Ax(t) + a_2 c^T bu_1(t) + c^T A^2 x(t) + c^T Au_1(t) \\ &\quad + c^T b\lambda u_1(t) + c^T bv(t) = 0 \end{aligned} \tag{2.3.19}$$

Hence

$$\begin{aligned} v(t) = v_{eq}(t) &= -(c^T b)^{-1}[(a_1 c^T + a_2 c^T A + c^T A^2)x(t) - a_1 y_{ref} \\ &\quad + (a_2 c^T b + c^T Ab + c^T b\lambda)u1(t)] \end{aligned} \tag{2.3.20}$$

Thus, we propose the following new output integral sliding mode controller

$$\begin{aligned} u_1(t) &= u(t) \\ u_2(t) &= \dot{u}_1(t) = \lambda u_1(t) + v_{eq}(t) - k\|x(t)\| sign(s(t)) - \rho |u_1(t)| sign(s(t)) \end{aligned} \tag{2.3.21}$$

where k and ρ are design parameters which are to be selected for the transformed system with unmatched plant uncertainties which is described in the following form

$$\begin{aligned} \dot{e}_1(t) &= e_2(t) = c^T x(t) - y_{ref} \\ \dot{e}_2(t) &= c^T Ax(t) + c^T \Delta Ax(t) + c^T bu_1(t) \\ \dot{e}_3(t) &= (c^T A^2 + c^T A\Delta A + c^T \Delta AA + cT\Delta A^2)x(t) + (c^T Ab + c^T \Delta Ab)u_1(t) + c^T bu_2(t) \end{aligned} \tag{2.3.22}$$

Now, we will analyze the sliding condition from which the design parameters k and ρ will be determined.

Lemma 2: Suppose that Assumptions 1 and 2 are met. Then the stable sliding motion is always generated on the switching surface $s(t) = 0$ (9) defined for the system (22) which is driven by controller (21), if the following conditions are satisfied:

$$k \geq \frac{\beta(a_2 + 2\alpha + \beta)}{\gamma} \tag{2.3.23}$$

Published by WSEAS Press
www.wseas.org
ISBN: 978-960-474-050-5
ISSN: 1790-5117

$$\rho \geq \frac{\|c\|\beta\gamma}{\min[c^T b]} \tag{2.3.24}$$

Proof: Calculating $s(t)\ \dot{s}(t) < 0$ on the system (9), (22), (21), (20)

$$\begin{aligned}
&s(t)\dot{s}(t) = s(t)[(a_1 c^T + a_2 c^T A + c^T A^2)x(t) - a_1 y_{ref} + (a_2 c^T b + c^T Ab + c^T b\lambda)u_1(t) \\
&+ c^T b v_{eq}(t)] + s(t)[(a_2 c^T \Delta A + c^T A\,\Delta A + c^T \Delta A\ A + c^T \Delta A^2)x(t) + c^T\ \Delta A\, b u_1(t) \\
&- c^T bk\|x(t)\|sign(s(t)) - c^T b\rho|u_1(t)|sign(s(t)) \\
&\leq (a_2\|c\|\beta + \|c\|\alpha\beta + \|c\|\beta\alpha + \|c\|\beta^2)|s(t)|\|x(t)\| - \min(c^T b)k|s(t)|\|x(t)\| + (\|c\|\beta\gamma \\
&- \min(c^T b)\rho)|u_1(t)|\|s(t)\| \\
&= \left[\|c\|\beta(a_2 + 2\alpha + \beta) - \min(c^T b)k\right]s(t)\|x(t)\| \\
&+ \|c\|(\beta\gamma - \min(c^T b)\rho)|u_1(t)|\|s(t)\| < 0 \\
&+ \|c\|(\beta\gamma - \min(c^T b)\rho)|u_1(t)|\|s(t)\| < 0
\end{aligned} \tag{2.3.25}$$

if the conditions (23)-(24) are satisfied.

Therefore, the stable robust sliding motion (22) is always generated in the system with unmatched uncertainties. Note that, both sliding conditions (13) and (23), (24) are inaccordance which is the another verification of design results. Thus, we have successfully design two new types of robust output integral sliding controllers for the stabilization of the vertical acceleration of the missile system with parameter perturbations. The stable sliding motion is always generated in the missile system and this motion has not been affected by parameter perturbations. So, desired closed loop missile system with high control performance is achieved.

2.3.4 Simulation Results

The above designed missile control systems has been simulated using MATLAB and special numerical routines. The block diagram of missile control system is shown in Fig.2. Simulation results are presented in Fig.3 through Fig.7. As can be seen from the figures, the structure of the applied control law in each case can control the vertical acceleration of the missile system in principle. Namely, the output can track the reference step input, i.e. the output error goes to zero in all cases. The switching function also goes to zero rapidly, which is very important for successful operation of VSC. The settling time is determined by two factors, namely, the hitting time and the sliding time. The less hitting time means the reduction of settling time. It should be mentioned that the performance criterions, which is outlined in Section 2 are fulfilled in each cases, i.e. the percent overshoot is around 10 percent, the output steady state error is zero, elevator deflection angle, and elevator deflection rates are in the required bounds. The most important is the fact that the controlled system keeps its robustness when the missile parameter varies in a wide range. Notice that the model contains 10 operating conditions which depend on Mach number, altitude, and mass of the vehicle, etc. The controller can successfully control the missile system for all 10 flight conditions.

It is also noted that the missile system has a non-minimum phase transfer function, thus it is difficult to find a control strategy which satisfies both steady state and transient response criteria. Furthermore, the standard VSC i.e. without integral control fail to control due to structure of A and b matrices.

The two new control strategies are applied to the missile system. The results are quite satisfactory. The missile system has undamped characteristic and vibrates. Due to the chattering phenomena VSC is in general not suitable to this type of systems. However, if chattering frequency is kept far away from the missile system natural frequencies, then we can use the VSC in confidence. Note that, it is easy to reduce the chattering phenomena by varying the controller parameters. However, this affects the closed loop system robustness. Thus, there is a controversy between the chattering vibration and system robustness. However, since the elevator actuator (hydraulic or pneumatic) has a second order low pass filter characteristics, the high frequency component produced by the VSC is weakened, and can be applied to the control elements of missile system.

The figures are ordered as follows:

Published by WSEAS Press
www.wseas.org
ISBN: 978-960-474-050-5
ISSN: 1790-5117

Fig.3 represents the results when VSC is absent (k=0), The controller is operated as an equivalent control, i.e. the control is a continuous control law, although it is derived from the condition $\dot{s}(t) = 0$ Note that the equivalent controller has a first order dynamic and the equivalent control law $u_{eq}(t)$ is obtained by solving a first order differential equation. As can be seen from the figure the equivalent control law brings the system close to the desired state. The output error goes to zero but other performances such as the settling time are not in stated bounds. Although, it is possible to get better performance by varying the equivalent control design parameters, it is not possible to fulfill the desired criteria. The VSC is added to the system to fulfill these criteria.
Fig.3.g and 3.h denotes the phase plane of error and switching coordinates. Fig.4, 5, 6, 7 denotes the graphs where both the VSC and the equivalent control present. Random disturbances are given to the system. The values of design parameters corresponding to figures Fig.4, Fig.5, Fig.6, Fig.7 are tabulated in Table.2 where k is calculated considering the condition (13.a). Detailed analysis of output error in Fig 4,5,6,7 shows that the output steady state error goes to zero very rapidly and, settling time and other control performance indices are in required bounds. Random disturbances are given in each integration step corresponding to changes in flight conditions. The amplitude of disturbances is adjusted in such a way that the simulation covers almost the whole

Table 2

a_1	a_2	a_3	k	α	β	γ
2232.6	65.4	1	0	545	15	190
1851.3	357	1	9.7	545	27.8	190
2019.5	271	1	8.1	545	33.2	190
1926.6	187.8	1	11.2	545	54	190
1981.6	154.5	1	7.9	545	82	190

envelope of the given flight conditions. In Fig.7 elements of the system matrix A are perturbed in such a way that the envelope includes all of 10 cases of flight conditions. Maximum change of value of an element in one integration step was 0.5 percent of the elements mean value, and maximum variance from the mean is determined by Table.1. Note that, Fig.7 is represents a kind of "the worst case", and even in this worst case, system can still be assumed as robust. Perturbation of system parameters does not deteriorate the system performance.
As can be seen from the Fig 7 when system parameters change rapidly chattering phenomenon exhibits clearly. Two points should be mentioned here. First, this type of system cannot be controlled by the use of equivalent control only. Second, the vibration caused by the VSC is damped by the system dynamic. Phase plane of switching function *s(t)* and its derivative $\dot{s}(t)$ and phase space of $e_1(t), e_2(t), e_3(t)$, are shown in g) and h) parts of Fig.3 through 7. Phase plane graphs shows that the state trajectories of the missile control system have a stable focus (or stable node, or stable saddle point). Therefore any initial motion has been attracted to the stable focus (or stable node) by the control action. Thus the phase plane shows that the missile system with integral sliding mode control is asymptotically stable.
As can be seen from the phase space the states rapidly reach to the switching hyperplane, and from this hitting time, the sliding motion is generated on this hyperplane. The sliding motion is continuing towards origin, exhibiting asymptotic stability. Note that, the sliding phase plane and the output error phase space of missile system confirm our design procedure. Thus by the use of proposed sliding mode controllers the system keeps its robustness while without loosing its main performances.
The above results show that the proposed sliding mode control strategies can be used to control a missile system which is difficult to control by classical control strategies (Jafarov and Tasaltin, 2001) [78].

2.3.5 Conclusion

Published by WSEAS Press
www.wseas.org
ISBN: 978-960-474-050-5
ISSN: 1790-5117

In this paragraph, the guided missile system is considered as SISO plant with parameter perturbations. The structure of the missile system is not suitable for the use of classical linear controllers. On the other hand the missile system should possess good performances, such as zero steady state error, less settling time etc. Standard VSC control laws fail to control the steady state error due to the structure of system matrices. For this reason we have proposed two new robust output integral sliding mode controllers and design procedures.

An integrator is included in the sliding function s(t) , which results the reduction and removal of the output error. The total control consists of two parts: 1) equivalent control part which compensates the nominal regime of the missile system and 2) VSC part which compensates the parameter perturbations (changes in Mach number, altitude and mass of the vehicle etc) of missile system. In the first design method, the equivalent control law is obtained by solving a first order differential equation, i.e. equivalent control is a dynamic controller type. For this case the sliding condition with respect to the switching variable are investigated. The asymptotic stability of the missile system with parameter perturbations in large with respect to the state coordinates are derived by using the Lypunov's direct method. The second case considers the complete design of the missile control system. New state (control) variables are included into the system, i.e. we augmented the system in such a way that the augmented system has better performance and easier design procedure than those of the first method.

We have also derived a new constructive sliding and stability conditions for this case by using Lypunov's direct method. Note that, the results of both cases are coincide and in accordance with each other.

Various simulation results are added to show that the proposed sliding mode controllers provide good closed loop performances of output steady state error, settling time (hitting time and sliding time), overshoot etc. The variation of system parameters does not affect the controlled system performances considerably, i.e. the control system is robust against parameter variations.

Simulation results of the proposed design procedure are verification of our theoretical foundations. As a result, we can clearly state that the VSC can be applied for missile control systems.

Table 1

Altit.	0m	0m	0m	0m	0m	12km	12km	12km	12km	12km
Mach Num	0.8	0.8	1.6	1.6	2.5	2.0	2.0	2.0	3.0	4.0
a_{11}	-0.327	0.391	-0.688	-0.738	-0.886	-1.363	-0.333	-0.337	-0.369	-0.402
a_{12}	-63.94	-130.3	-619.3	-651.6	-1068	-92.82	-163.2	-224	-253.7	-277.2
a_{22}	-1.0	-1.42	-2.27	-2.75	-3.38	-4.68	-0.666	-0.663	-0.8	-0.884
b_1	-155.9	-186.5	-552.9	-604.2	-1004	-128.5	-153.3	-228.7	-249.9	-419.3
b_2	-0.237	-0.337	-0.429	-0.532	-0.582	-0.087	-0.124	-0.112	-0.135	-0.166
c_{11}	0.326	0.35	0.65	0.66	0.79	1.36	0.298	0.319	0.33	0.36
c_{12}	-208.5	-272.4	-651.1	-913.6	-1926	-184.3	-247.8	-375.7	-500.6	-796.2
d_1	90.93	75.06	283.4	250.5	402.9	76.43	63.77	117.49	103.8	178.6

Published by WSEAS Press
www.wseas.org
ISBN: 978-960-474-050-5
ISSN: 1790-5117

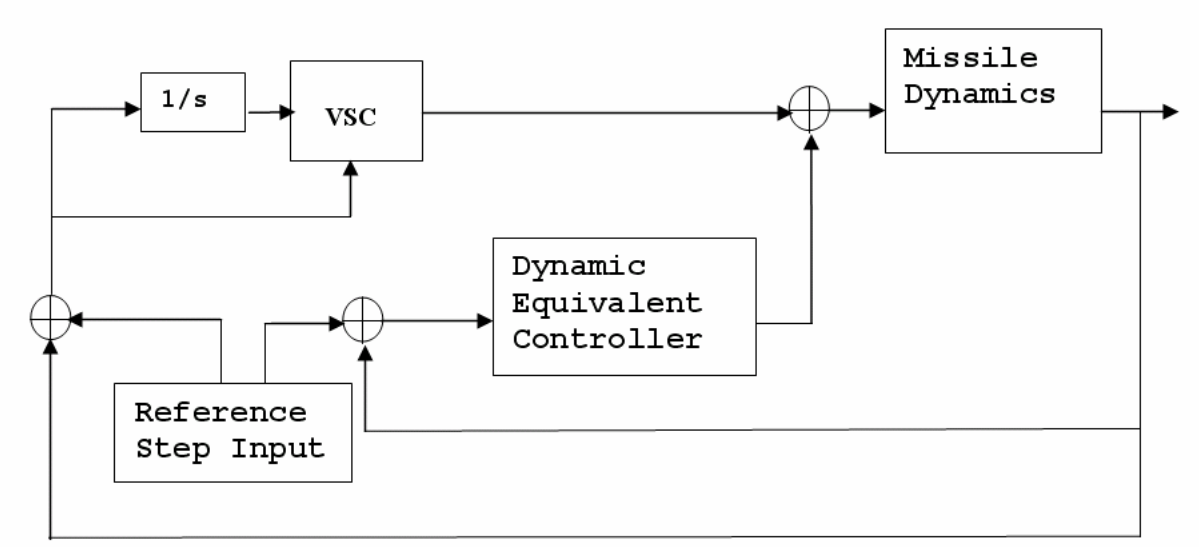

Fig.2 Block diagram of the missile control system

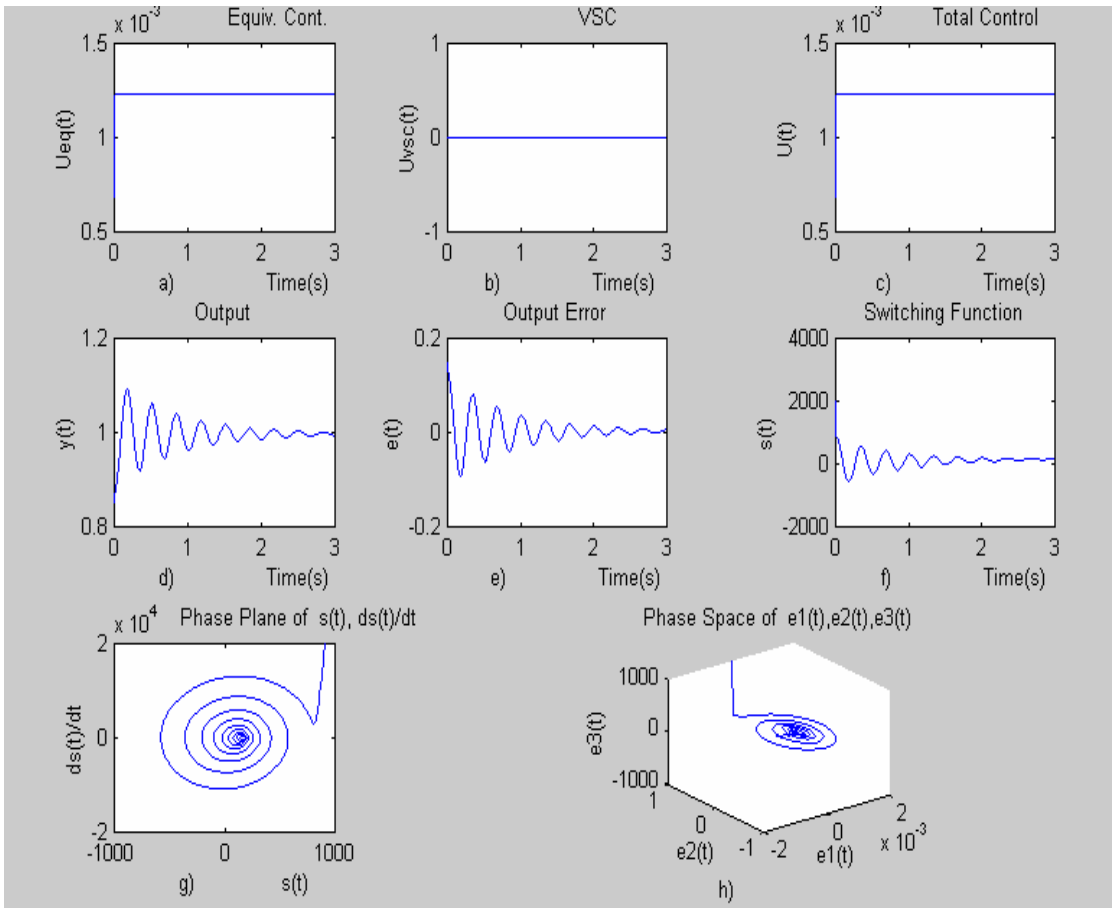

Fig.3 Simulation results of the missile control system.

Published by WSEAS Press
www.wseas.org
ISBN: 978-960-474-050-5
ISSN: 1790-5117

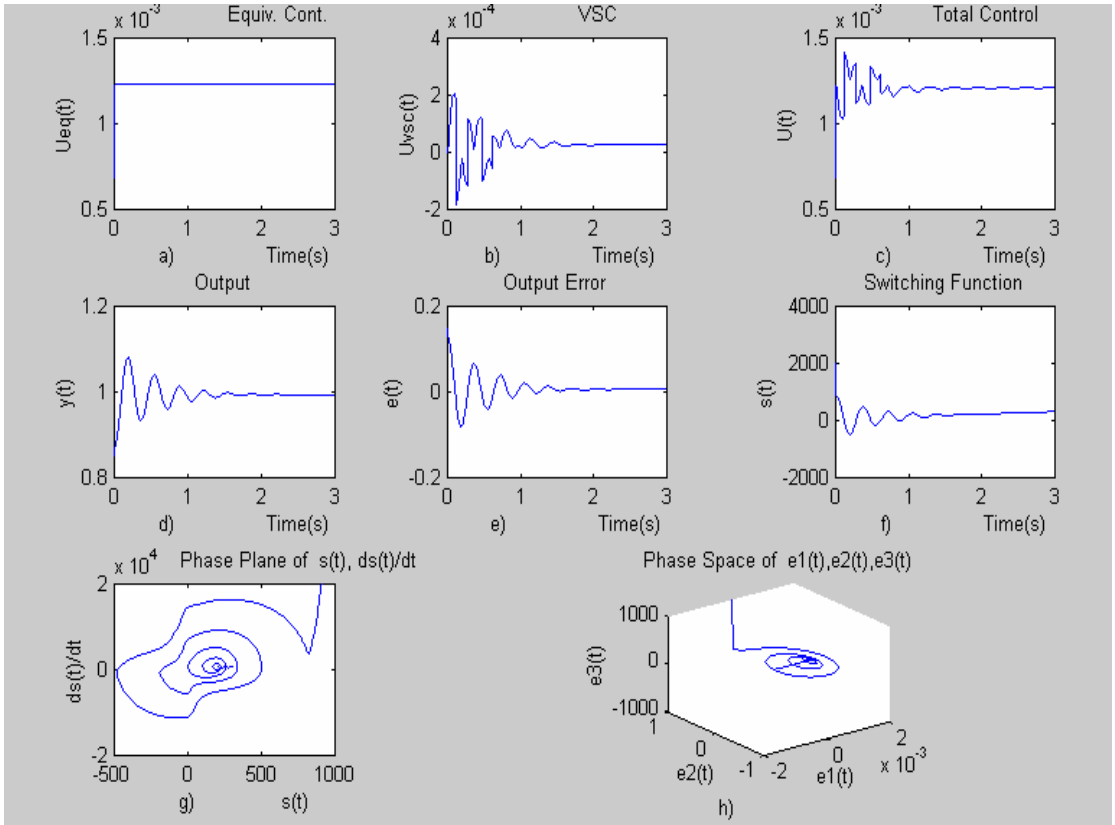

Fig.4 Simulation results of the missile control system.

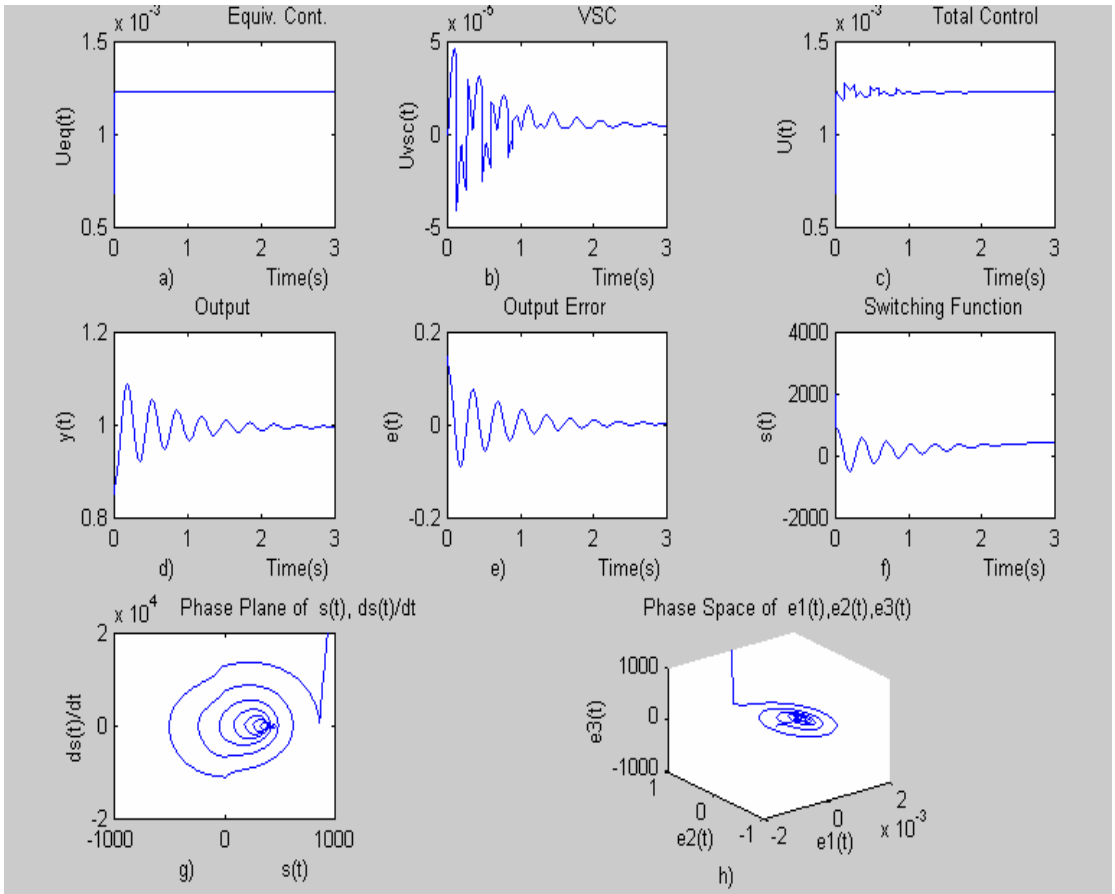

Fig.5 Simulation results of the missile control system.

Published by WSEAS Press
www.wseas.org
ISBN: 978-960-474-050-5
ISSN: 1790-5117

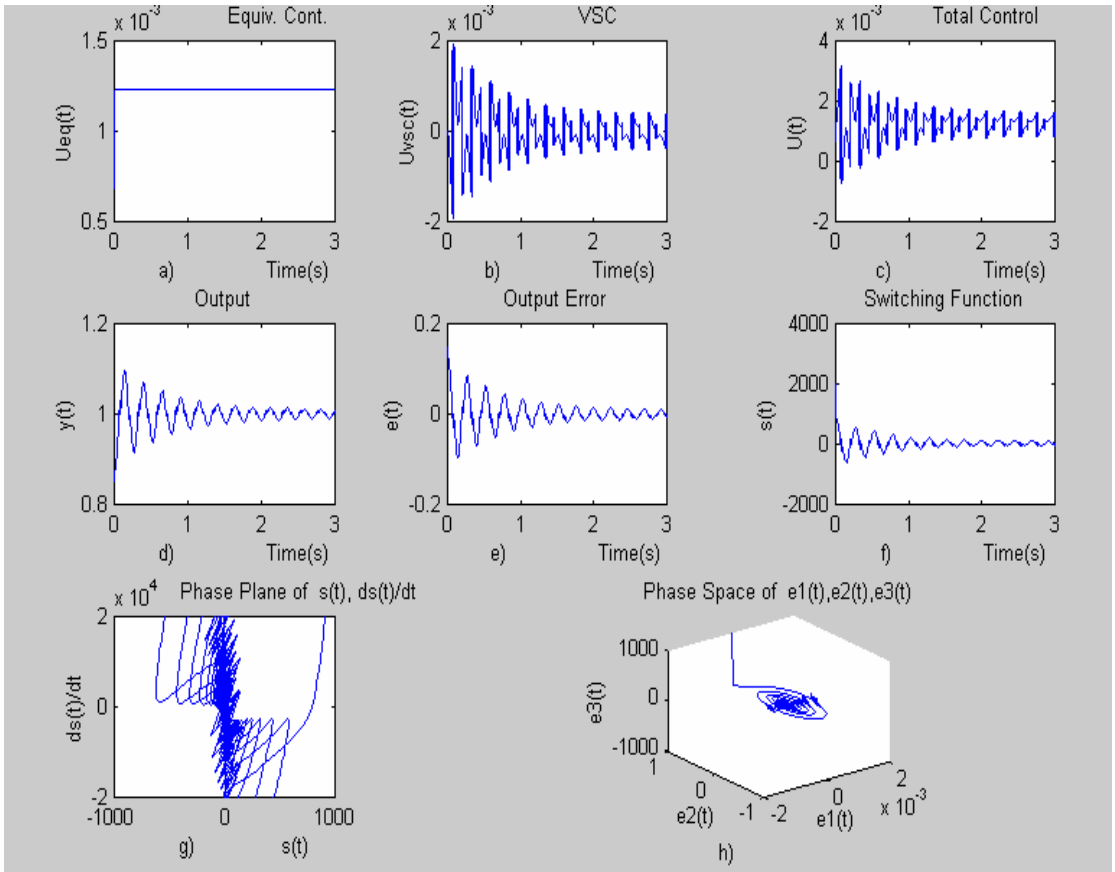

Fig.6 Simulation results of the missile control system.

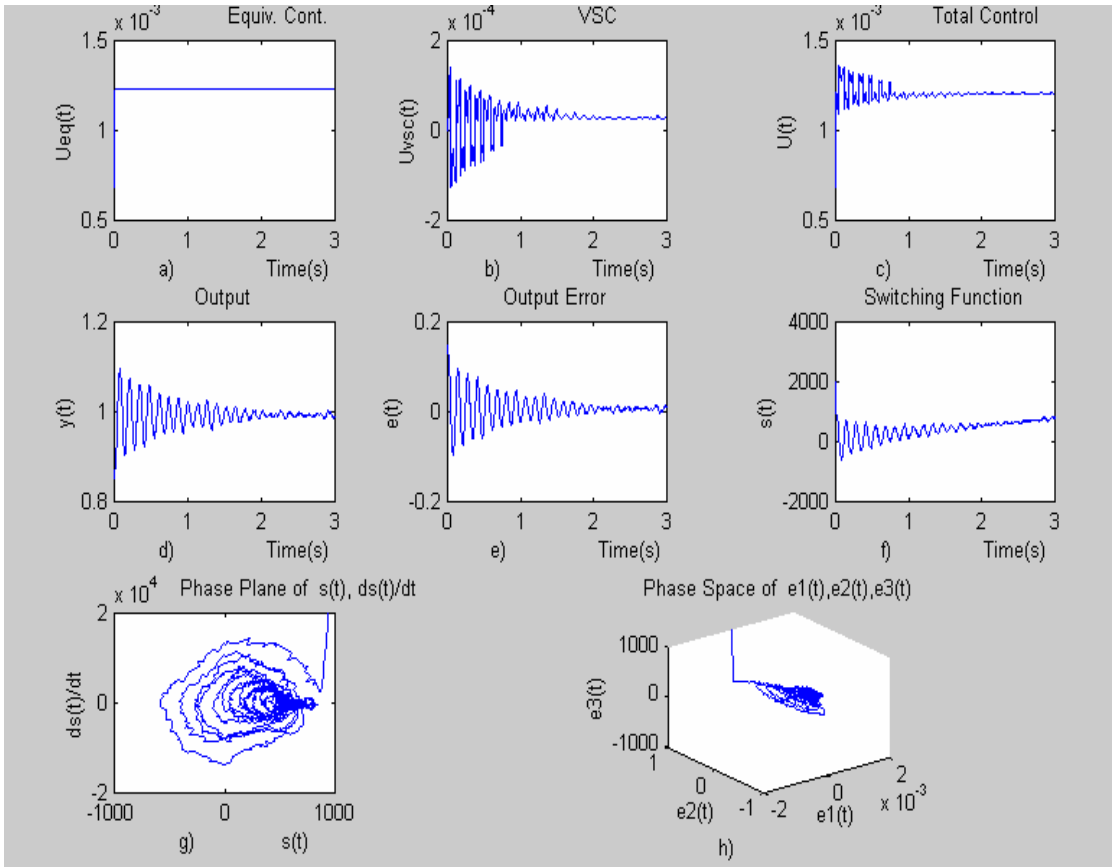

Fig.7 Simulation results of the missile control system.

Published by WSEAS Press
www.wseas.org
ISBN: 978-960-474-050-5
ISSN: 1790-5117

2.4 References

[1] Bodner, V, A Automatic Flight Control Theory Moscow: Nauka, 1964 (in Russian).

[2] Blakelock, J, H. (1991) Automatic Control of Aircraft and Missiles. New York: Wiley, 1991.

[3] McLean, D. (1990) Automatic Flight Control System. New York: Prentice Hall 1990.

[4] Nelson, R.C.(1980).Flight Stability and Automatic Control. New York: Mc Graw-Hill, 1989.

[5] Petrov, B.N. and Emelyanov, S.V. (Eds) (1968) Variable Structure Systems and Their Application to Flight Automation. Moskow, Nauka, 1968 (in Russian).

[6] Calise, A.T., and Kremar , F.S. (1984) A variable structure approach to robust control of VTOL aircraft. Journal of Guidance, Control and Dynamics, 7 (Sept-Oct. 1984), pp. 620-626.

[7] Singh, S.N. (1989) Asymptotically decoupled discontinuous control of systems and nonlinear aircraft maneuver. IEEE Transactions on Aerospace and Electronic Systems, 25,(May1989), 380-391.

[8] Hedrich, J.K. and Gopalsawami, S. (1990) Nonlinear flight control design via Sliding Methods. Journal of Guidance, Control and Dynamics, 13, 5 (Sept-Oct. 1990), pp. 850-858.

[9] Sign. S.N., Steinberg. M and Digirolamo, R. (1997)Variable structure robust flight control system for the F-14. IEEE Transactions on Aerospace and Electronic Systems, 33,1 (Jan1997), pp. 77-84.

[10] Lu, X.Y., Spurgeon, S.K., and Poslethwaite, I.,(1997) Robust variable structure control of a PVTOL aircraft. International Journal of Systems Science, 28,6 (1997), pp. 547-558.

[11] Brierley, S.D. and Longchamp, R. (1990) Application of sliding-mode Control to air-air interception problem. IEEE Transactions on Aerospace and Electronic Systems, 26,2 (March 1990), pp. 06-325.

[12] Ertugrul, M., Sabanovic, A., Kaynak, O. and Erbatur, K. (1995) Sliding mode control for flight autopilot design. First International Aerospace and Advanced Technologies Symposium, Istanbul, Turkey March 1995, pp. 32-539 (in Turkey)

[13] Fossard, A.J. (1993) Helicopter control law based on sliding mode with model following. International Journal of Control, 57,5 (1993), pp. 1221-1235.

[14] Spurgeon, S.K., Edwards, E. and Foster, N.P. (1996) Robust model reference control using a sliding mode controller/observer scheme with application to a helicopter problem. In Proceeding of IEEE International Workshop on Variable Structure Systems, Tokyo Japan, (Dec.1996), pp. 6-41.

[15] Young. K-K.D. (Ed) (1993) Variable Structure Control for Robotics and Aerospace Applications. Amsterdam: Elsevier, 1993.

[16] Reicher, G., and Kessler, CH. (1995) Modern flight mechanics. First International Aerospace and Advanced Technologies Symposium, Istanbul, Turkey (March 1995), 277-311.

[17] Utkin, V.I. (1997) Variable structure systems with sliding modes. IEEE Transactions on Automatic Control. AC- 22,2, (April 1977), pp. 212-222.

[18] Hung, J.Y., Gao, W., and Hung, J.C. (1993) Variable Structure Control: A survey. IEEE Transactions on Industrial Electronics, 40,1 (Febr 1993), pp. 2-22.

[19]DeCarlo, D., Zaki S.H. and Matthew, G.B. (1988) Variable structure control of nonlinear multivariable systems: A tutorial Proceeding of the IEEE, 76,3 (March 1988), pp. 212-232.

[20] Carafalo, F. and Glielmo, L.(Eds). (1996) Robust Control Via Variable Structure and Lyapunov Techniques.London: Springer Verlag, 1996

[21]Young,K.D.,Utkin, V.I.and Ozguner, U., (1996) A control engineer's guide to sliding mode control.In Proceeding of IEEE International Workshop on Variable Structure Systems, Tokyo Japan, (Dec.1996), pp. 1-14.

[22] Hui, S., and Zak, S.H. (1992) Robust control synthesis for uncertain nonlinear dynamical systems. Automatica, 28,2, (1992), pp. 289-298.

[23] Gutman, S. (1976) Uncertain dynamical systems – A Lyapunov min-max approach.IEEE Transaction on Automatic Control. AC- 24, 3, (June 1979), pp. 437-443.

[24] Cheres, E. (1989) Design of min-max controller with predescribed sliding motion. International Journal of Systems Science, 20,12 (1989), pp. 2483-2493.

Published by WSEAS Press
www.wseas.org
ISBN: 978-960-474-050-5
ISSN: 1790-5117

[25] Watanabe, K. Fukuda, T. and Tzafestas, S., (1992) Sliding mode control a variable structure system observer as a dual problem for system with nonlinear uncertainties. International Journal of Systems Science, 23,11 (1992), pp. 1991-2001
[26] Ryani E.P. (1983) A variable structure approach to feedback regulation of un certain dynamical systems. International Journal of Control, 38,6 (1983), pp. 1121-1134
[27] Hung, C.M. and Wu, Y.C., (1989)
Formation of sliding regime with uncertain plant parameters. International Journal of Systems Science, 20,11 (1989), pp. 2291-2297.
[28] Dorling, C.M., and Zinober, A.S.I, (1988) Robust hyperplane design in multivariable structure control systems. International Journal of Control, 48,5 (1988), pp. 2043-2054.
[29] Spurgeon, S.K. (1991) Choise of discontinuous control component for robust sliding mode performance. International Journal of Control, 53,1 (1991), pp. 163-179.
[30] Yasuda, K. and Nakatsuji, Y., (1996) Robust sliding mode control of uncertain systems. In Proceedingof IEEE International Workshop on Variable Structure Systems, Tokyo Japan, (Dec.1996), pp. 15-19.
[31] Mita, T., Suzuki,T.,and Shimada, A., (1996) Robust decoupling control via sliding mode control. In Proceeding of IEEE International Workshop on Variable Structure Systems,Tokyo Japan, (Dec.1996), pp. 20-25.
[32] Liu, P., and Zinober, A.S.I. (1996) Robust control of nonlinear uncertain systems via sliding mode with recursive interlacing design.In Proceeding of IEEE International Workshop on Variable Structure Systems, Tokyo Japan, (Dec.1996), pp.26-29.
[33] Morioka, H. Wada, K. and Sabanonic, A. (1996) Sliding mode control based on the time delay estimation.In Proceeding of IEEE International Workshop on Variable Structure Systems, Tokyo Japan, (Dec.1996), pp. 102-107.
[34] Zinober, A.S.I.(Ed.) (1994) Variable Structure and Lyapunov Control London: Springer Verlag, (1994).
[35] Richard, J.A., Bufflington, J.M., Sparks, A.G. , and Banda, S.S. (1994) Robust Multivariable Flight Control. London: Springer Verlag, (1994).
[36] Drazenovic, B. (1969) The invariance conditions in variable structure systems. Automatica, 5 (1969), 287-295 [37] Luo, N., and Dela Sen, M. (1993) State feedback sliding mode control of class of uncertain time delay systems. IEE Proceeding –D, 140,4 (July 1993), pp. 261-274.
[38] Yoo, D.S., and Chung, M.J. (1992) A variable structure control with simple adaptation laws for upper founds on the norm of the uncertainties. IEEE Transactions on Automatic Control AC-37, 6, (Jun-1992), pp. 860-864.
[39] Shyu, K-K., and Hung J.C., (1997) Totally invariant variable structure control systems. In Proceedings of the 23rd International Conference on Industrial Electronics, Control and Instrumentation, IECON'97, pp. 1119-1123.
[40] Emelyanov, S.V. (1967) Variable Structure Control Systems. Moscow: Nauka, 1974 (in Russian).
[41] Utkin, V.I. (1974) Sliding Modes and Their Application in Variable Structure Systems.Moscow: Nauka, 1974 (in Russian).
[42] Jafarov, E.M. (1978) Optimization of Variable Structure Systems, Eng. Cyber., 3, (1978), pp. 44-49 (in Russian).
[43] Jafarov, E.M. (1982) Multi-Structural Control of Continous Processes. Doctor of Science Dissertation, MIEM-LETI. Moscow: VNIITN center, 1982, pp. 450 (in Russian).
[44] Dela Sen, N.L.M., and Rodellar, J. (1997) Robust stabilization of a class of uncertain time delay systems in sliding mode. International Journal of Robust and Nonlinear Control, 7, (1997), pp. 59-74.
[45] Dorling, C.M., and Zinober, A.S.I. (1986) Two approaches to hyperplane design in multivariable structure control systems. International Journal of Control, 44, 1, (1986), pp. 65-82.
[46] Woodham, C.A., and Zinober A.S.I. (1993) Eigenvalue placement in a specified sector for variable structure control systems. International Journal Of Control, 57, 5, (1993), pp. 1021-1037.
[47] Utkin, V.I. (1992) Sliding Modes In Control and Optimization. Berlin: Springer, 1993.
[48] Accermann, J., Bartlett, A., Kaesbauer, D., Sienel, W., and Steinhouse, R. (1993). Robust Control: Analysis and design of linear control systems with uncertain physical parameters. London: Springer, 1993.

Published by WSEAS Press
www.wseas.org
ISBN: 978-960-474-050-5
ISSN: 1790-5117

[49] Ogata, K. (1990) Modern Control Engineering.Newyork: Prentice Hall, INC, 1990.
[50] Spong, M.W., and Vidyasagar, M. (1989) Robot Dynamics and Control. Newyork: John Wiley and SONS, 1989
[51] Slotine, J.J.E. (1984) Sliding controller design for nonlinear systems. International Journal of Control, 40, 2, (1984), pp. 421-434.
[52] Slotine, J.J.E., and Li, W. (1991) Applied Nonlinear Control. New Jersey: Prentice Hall, 1991.
[53] Sira-Ramizer, H. (1993). A dynamical variable structure control strategy in asymptotic output tracking problem.IEEE Transactions on Automatic Control, 38, 4, (1993), pp. 615-620.
[54] Hu, K.J., Basher, V.R., and Crisalle, O.D. (1998). Sliding mode control of uncertain input delay systems.In proceedings of the 1998 American Control Conference, 1, (6), (1998) pp. 564-568.
[55] Utkin, V.I., Vostrikov, A.S., Jafarov E.M., Kostileva, N.E., Sabanovic, A., Bondarev, S.A., Spivaki L.M., Izosimov, D.B., (1985). Application of sliding modes to automation problems in technical plants.Izmereniya, Kontrol, Avtomatizatsiya (Measurement, Control and Automation), 1, (53), (1985), pp. 74-84 (in Russian).
[56] Chera, T.L., and Wu, Y.C. (1991) Design of integral variable structure controller and application to electrohydraulic velocity servo systems. IEE Proceedings-D, 138, 5, (1991). pp. 439-444.
[57] Levant, A., Pridor, A., Ben-Asher, J.Z., Gitizadeh, R., and Yaesh, I. (1999) Second order sliding mode implementation in aircraft pitch control. In proceedings of European Control Conference ECC 99, 31 August – 3 September,Karlsruhe, Germany, (1999).
[58] Esfandiari, F., and Khalil, H.K., (1991) Stability analysis of a continuous implementation of variable structure control. IEEE Transaction on Automatic Control, 36, 5, (1991), pp. 616-620.
[59] Bartolini, G.,(1989). Chattering phenomena in discontinuous control systems. International Journal of Systems Science, 20, 12, (1989), pp. 2471-2481.
[60] Jafarov, E.M., and Tasaltin, R. (1998). Robust sliding mode flight control systems for the uncertain MIMO aircraft model F-18. Proceedings of the 2nd Ankara International Aerospace Conference. AIA'98. METU Ankara Turkey (1998), pp. 197-199.
[61] Jafarov, E.M., and Tasaltin, R. (1999). Design of longitudinal variable structure control systems for the F-18 aircraft model with parameter perturbations. In Proceedings of the 1999 IEEE International Conference on Control Applications and IEEE International Symposium on Computer Aided Control System Design, August 22-26, Kohala Coast, Island of Hawaii, Hawaii, SA, (1999), pp. 607-612.
[62] Jafarov, E.M., and Tasaltin, R. (2000) Robust slidind-mode control for the uncertain MIMO aircraft model F-18. IEEE Transactions on Aerospace and Electronic Systems (2000) pp. 1127-1141.
[63] Brierley, S,D. and R. Longchamp (1990), Application of sliding-mode control to air to air interception problem, IEEE Transactions on Aerospace and Electronic Systems, vol.26, no.2, pp.306-325.
[64] Kim, S.-H. and Ch. Song (1998), A robust adaptive nonlinear control approach to missile autopilot design, in Preprint of 14th IFAC Symposium on Automatic Control in Aerospace, Seoul, Korea, pp.55-58.
[65] George, K.K., Bhat M.S. and K.N. Swamy (1998), A variable structure controller for a flight vehicle, in Preprint of 14th IFAC Symposium on Automatic Control in Aerospace, Seoul, Korea, pp.256-258.
[66] Hartman, U. and G. Grebing (1990), Problem \#90-05 Control of missile autopilot, Benchmark Problems for Control System Design, IFAC, pp.14-16.
[67] Utkin, V.I. (1992) Sliding Modes in Control and Optimization, Berlin: Springer-Verlag.
[68]Young D.K.K. [Ed.] (1993), Variable Structure Control for Robotics and Aerospace Applications, Amsterdam: Elsevier.
[69] Garafalo, F., and L.Glielmo [Eds] (1996), Robust Control via Variable Structure and Lyapunov Techniques, Berlin: Springer-Verlag.
[70] Edwarsds Ch. and Spurgeon S.K. (1998), Sliding Mode Control: Theory and Applications, London: Taylor-Francis.
[71] Mita, T., Suzuki, T. and A.Shimada (1996), Robust decoupling control via sliding mode control, Proceedings of 1996 IEEE International Workshop on Variable Structure Systems, Japan, Tokyo, pp.20-25.

Published by WSEAS Press
www.wseas.org
ISBN: 978-960-474-050-5
ISSN: 1790-5117

[72] Gessing, R. (1998), Decrease of chattering effect in sliding mode control, in Proceedings of 8th IFAC Symposium on Large Scale Systems: Theory and Applications, Rio, Patras, Greece, pp.995-1000.
[73] Jafarov, E.M. and Tasaltin, R. (1998) Robust sliding mode flight control systems for the uncertain MIMO aircraft model F-18. Proceedings of the 2.nd Ankara International Aerospace Conference. AIA'98. METU Ankara Turkey, pp.187 199.
[74] Jafarov, E.M. and Tasaltin, R. (1999) Design of longitudinal variable structure control system for the F-18 aircraft model with parameter perturbations. In Proceedings of the 1999 IEEE International Conference on Control Applications and IEEE International Symposium on Computer Aided Control System Design, August 22-26, Kohala Coast, Island of Hawaii, Hawaii, USA, pp.607-612.
[75] Jafarov, E.M. and Tasaltin, R. (2000) Robust sliding mode flight control systems for the uncertain MIMO aircraft model F-18. IEEE Transactions on Aerospace and Electronic Systems., Vol.36, Number:4(10), pp.1127-1141.
[76] Levant,A., Pridor, A.,Ben-Asher, J.Z., Gitizadeh,R. and Yaesh. I.(1999).Second order sliding mode implementation in aircraft pitch control.In Proceedings of European Control Conference ECC 99, 31 August-3 September, Karlsruhe, Germany.
[77] Blakelock, J.H.(1991) Automatic Control of Aircraft and Missiles. John Wiley and Sons. New York.
[78] Jafarov, E. M. and Tasaltin, R. (2001) Design of robust autopilot-output integral sliding mode controllers for guided missile systems with parameter perturbations. International Journal of Aircraft Engineering and Aerospace Technology pp.16-25

Published by WSEAS Press
www.wseas.org
ISBN: 978-960-474-050-5
ISSN: 1790-5117

CHAPTER 3

Published by WSEAS Press
www.wseas.org
ISBN: 978-960-474-050-5
ISSN: 1790-5117

CHAPTER 4

Variable Structure Control of Time-Delay Systems with Parameter Uncertainties

4.1 Introduction

This chapter consists of two sections. Section 4.2 considers robust stabilization of multivariable single state-delayed systems with mismatching parameter uncertainties and matching/mismatching external disturbances. Sliding mode control design methods for both certain and uncertain multi-input systems with several fixed state delays are considered in section 4.3.

4.2 Robust sliding mode controller of multivariable single time-delay systems with parameter perturbations and external disturbances

In this paragraph, robust delay-independent stabilization of multivariable single state-delayed systems with mismatching parameter uncertainties and matching/mismatching external disturbances are considered. To achieve this goal, two types of robust sliding mode controllers design techniques are advanced. The first is an integral sliding mode controller design modification to Shyu and Yan type controller design. The mismatching sliding conditions are parametrically obtained by using Lyapunov-Razumikhin-Hale method and formulated in terms of some matrix norm inequalities. In the second contribution, a new combined sliding mode controller design technique for the stabilization of multivariable single state-delayed systems with mismatching parameter perturbations are advanced by using Lyapunov-Krasovskii V-functional method. The sliding, global stability and delay-dependent β-stability conditions are parametrically obtained and formulated in terms of matrix inequalities. A sliding mode controller design example for AV-8A Harrier VTOL aircraft with lateral unstable dynamic model parameters is considered to illustrate the controller design method. Design procedures and simulation results show that our advanced method is useful. And unstable lateral dynamics is successfully stabilized by using combined controller

4.2.1 Brief analysis of time-delay systems

It is well known that major engineering and communication systems contain time-delay and parameter uncertainties subject to external disturbances. The existence of time-delay effect is frequently a source of instability. Robust stabilization of time-delay system is not as easy as that of a delay-free system. Therefore, the problem of robust stabilization of uncertain dynamical systems with time-delay has received considerable attention of control researchers. From the point of view of robust control design approaches the variable structure control concept has played most important role because of its robustness to parameter uncertainties and external disturbances. There are a large number of such papers in literature (for example, see Garofalo and Glielmo (1996) [1]; Ha, Rye and Durrant-Whyte (1999) [2]). Remember that, some simple and more complicated conventional variable structure algorithms for delay-free systems are presented by Emelyanov (1967) [3], Utkin (1974) [4], Spurgeon (1991) [5], Edwards and Spurgeon (1998) [6], etc. However, the number of papers concerning time-delay systems is not large. Shyu and Yan (1993) [7] have treated an integral variable structure controller involving equivalent control term and relay term for stabilization of time delay systems with parameter uncertainties. Robust β-stability condition for unforced perturbed system is derived by using Razumikhin-Hale type theorem. System matrix and its variation are cancelled by equivalent control term while relay term is used only for generation the sliding mode on the integral sliding surface. However, actually exact equivalent control term is unavailable since it is dependent on unknown norm-bounded parameter uncertainties. Finally, VSC is designed only for nominal time-

Published by WSEAS Press
www.wseas.org
ISBN: 978-960-474-050-5
ISSN: 1790-5117

delay system. Moreover, global stability condition needs the existence of stable system matrix. In spite of this, Shyu and Yan type controller for the considered system is designed very well.
Luo and De La Sen (1993) [8] have designed the VSC including absolute values of state and delayed-state feedback for robust stabilization of single input-delayed systems with parameter uncertainties. Global stability condition is derived by using matrix measure method. Such design approach is generalized for single state and input delayed SISO and MIMO system with parameter uncertainties and external disturbances (Luo, De La Sen and Rodellar, 1997 [9]). Robustness properties of sliding time-delay systems are analyzed.
Koshkouei and Zinober (1996) [10] have designed a sliding mode controller including equivalent control term and relay term for stabilization of time-delay canonical MIMO system with matched external disturbances by using Lyapunov-Krasovskii V-functional method. Lyapunov-Krasovskii V-functional method (Lyapunov 1992 [11], Krasovskii 1959 [12]) has been introduced to stability analysis of variable structure systems with time-delay by Jafarov (1980 [13], 1998 [14]).
Lyapunov-Krasovskii V-functional method has been used for stabilization of multiple state-delayed linear systems by Nazaroff (1973) [15]. Four-term sliding mode controller design for multiple state-delayed systems with mismatching parameter perturbations and matching external disturbances are considered by Li and DeCarlo (2001 [16] and 2003 [17]). This approach is applied to systems with differentiable time-varying delays (Li and DeCarlo, 2003 [17]).
Recently, several sliding mode controller design methods for uncertain systems with and without time-delay are considered by many authors.
The behavior and design of sliding mode control system with state and input delays are considered by Perruquetti and Barbot (2002) [18] using Lyapunov-Krasovskii functionals.
Latest research results in this area are given in survey paper by Richard, Gouaisbaut and Perruquetti (2001) [19]. The combination of delay phenomenon with relay actuators makes the situation much more complex. Designing a sliding controller without taking delays into account may lead to unstable or chaotic behaviors or, at least, results in highly chattering behaviors.
Four-term robust sliding mode controllers for matched uncertain systems with single or multiple, constant or time-varying state delays are designed by Gouaisbaut, Dambrine, and Richard (2002) [20] by using Lyapunov-Krasovskii functionals and Lyapunov-Razumikhin function combined with LMI's techniques.
Shyu and Yan (1993) [7] design approach is extended to a combined four-term sliding mode controller design for matched/mismatched uncertain time-delay systems with a class of nonlinear inputs by Yan (2003) [21]. Delay-dependent stability condition is derived by using quadratic Lyapunov function already involving an unknown delay constant. Conservativeness example with good results is presented.
An analysis and design of bounded switching feedback controller for delay free variable structure systems with matched lumped uncertainties are presented by Choi (2004) [22].
In general, an overview of some recent advances and open problems in time-delay systems and sliding mode control for systems with input/output delays is given in large survey paper by Richard (2003) [23]. Some delay-dependent stability criteria for time-delay systems are advanced by Jafarov (2003) [24].
Another type of VSC known as the min-max controller for robust stabilization of time-varying state-delayed dynamical systems with matching parameter uncertainties and external disturbance has been designed by Cheres, Gutman and Palmor (1989) [25]. The global stability and β-stability conditions are formulated in terms of differential Riccati equations by using Razumikhin-Hale type theorem. Brief analysis of reviewed papers show that various types of sliding mode controllers and design techniques for uncertain systems with and without time-delay are considered. However, global asymptotical stability and sliding conditions for stabilization of multivariable time-delay systems with parameter perturbations and external disturbances by using a modified Shyu and Yan controller and combined sliding mode controller are not investigated systematically. In light of above mentioned design approaches, we will develop two types of modified simple two-terms sliding mode controllers without an equivalent control term for perturbed and delayed systems with unstable system matrix. Some new design techniques will be advanced.
In this section, robust delay-dependent stabilization of multivariable single state-delayed systems with mismatching parameter uncertainties and matching/mismatching external disturbances is considered.

Published by WSEAS Press
www.wseas.org
ISBN: 978-960-474-050-5
ISSN: 1790-5117

To achieve this goal, two types of robust sliding mode controllers design techniques are proposed. The first contribution is an integral sliding mode controller design modification to Shyu and Yan type controller without using an equivalent control term. The mismatching sliding conditions are parametrically obtained by using Lyapunov-Razumikhin-Hale method and formulated in terms of matrix norm inequalities. In the second contribution, a new combined two-terms sliding mode controller design technique for the stabilization of multivariable single state-delayed systems with mismatching parameter perturbations is advanced by using Lyapunov-Krasovskii V-functional method. The controller design approaches presented in this section are a little different from Li and DeCarlo, Shyu and Yan types' controller design approaches. The sliding, global stability and delay-dependent β-stability conditions are parametrically obtained and formulated in terms of matrix inequalities. Some mathematical analysis of sliding mode control and inequality estimations has been done also. A sliding mode controller design example for AV-8A Harrier VTOL aircraft with lateral unstable dynamic model parameters is considered to illustrate the controller design method. Design procedures and simulation results show that our advanced method is useful. And unstable lateral dynamics is successfully stabilized by using combined controller. Preliminary results of this work are presented in (Jafarov, 2003 [24]).

This chapter is organized as follows: Section 4.2.2 contains system description and assumptions; Integral sliding mode controller design techniques are advanced in Section 4.2.3; Sliding mode controller design method and aircraft control design example are presented in section 4.2.4. Finally, the conclusion is included in Section 4.2.5.

Further we shall use the following notation: R is a real-number field; $x(t)$ is a column vector; $x^T(t)$ is the transpose of a vector $x(t)$; A^T is the transpose of a matrix A; $\|x(t)\| = \sqrt{x^T x}$ is the Euclidean norm; $\|A\| = \sqrt{\lambda_{\max}(A^T A)}$ is a matrix norm; $\lambda_{\min}(A)$ and $\lambda_{\max}(A)$ are minimum and maximum eigenvalues of matrix A, respectively, Rayleigh's principle for a positive definite matrix P:

$$0 < \lambda_{\min}(P)\|x(t)\|^2 \le x^T(t)Px(t) \le \lambda_{\max}(P)\|x(t)\|^2$$

4.2.2 System description and assumptions

Consider the following dynamical time-delay system with parameter uncertainties and external disturbances described by the following state space equations

$$\dot{x}(t) = \left(A_0 + \Delta A_0(\sigma)\right)x(t) + \left(A_1 + \Delta A_1(\sigma)\right)x(t-h) + Bu(t) + Df(t), \qquad t > 0 \tag{4.2.1}$$

$$x(t) = \varphi(t), \quad -h \le t \le 0$$

where $x(t) \in R^n$ is the state measurable vector; $u(t) \in R^m$ is the control input; A_0, A_1 and D are known ($n \times n$)-matrices, B is a known ($n \times m$)-matrix of full rank; the norm-bounded matrices $\Delta A_0(\sigma)$ and $\Delta A_1(\sigma)$ represent the parameter uncertainties; the norm-bounded $f(t) \in R^n$ is unknown external disturbance; h is a known positive constant time-delay and $\varphi(t)$ is a continuous vector-valued initial function on $-h \le t \le 0$.

The objective of this work is to design the sliding mode controllers for robust stabilization of MIMO time-delay systems with parameter perturbations and external disturbances.

We now make the following conventional assumptions.

Assumption 1: There exist some norm-bounded matrices $H_0(\sigma)$, $H_1(\sigma)$ and E of appropriate dimensions, such that the following matching conditions (Drazenovic, 1969 [27]; Cheres, Gutman and Palmar, 1989 [25]) are satisfied:

$$\Delta A_0(\sigma) = BH_0(\sigma), \quad \Delta A_1(\sigma) = BH_1(\sigma), \quad D = BE \tag{4.2.2}$$

Assumption 2: $\Delta A_0(\sigma), \Delta A_1(\sigma), E(\sigma)$ and $f(t)$ are norm-bounded:

$$\max_{\sigma}\|\Delta A_0(\sigma)\| \le a_0\,;\ \max_{\sigma}\|\Delta A_1(\sigma)\| \le a_1\,;\ \max_{\sigma}\|E(\sigma)\| \le \eta\,;\ \|D\| \le d\,;\ \|f(t)\| \le \theta\,; \tag{4.2.3}$$

where a_0, a_1, η, d and θ are given positive constants.

Definition 1: A system is said to be robustly stable if the system is nominally stable as well, and allows changing in certain specific bounds of perturbation while keeping stability.

Published by WSEAS Press
www.wseas.org
ISBN: 978-960-474-050-5
ISSN: 1790-5117

Definition 2 (Cheres, Gutman and Palmor, 1989 [25])**:** The system (1) is said to have a stability degree $\beta > 0$ if there exists a positive number $c > 0$ (depending on initial conditions) such that the solution of (1) satisfies

$$\|x(t_2)\| \le ce^{-\beta(t_2-t_1)}\|x(t_1)\| \text{ for all } t_1, t_2 \in R^+,\ t_2 > t_1 \tag{4.2.4}$$

Observation 1: (Thowsen 1981 [28], Cheres, Gutman and Palmor 1989 [25], Shyu and Yan 1993 [7] etc.):
If,

$$z(t) = e^{\beta t}x(t) \tag{4.2.5}$$

where $x(t)$ is the solution of (1) and $z(t) = 0$ is asymptotically stable. Then the system (1) has a stability degree $\beta > 0$.

4.2.3 Integral sliding mode controller design

In this section integral sliding mode controller design modification to Shyu and Yan type controller design is advanced. The mismatching sliding conditions are parametrically obtained by using Lyapunov-Razumikhin-Hale method and formulated in terms of matrix norm inequalities.

4.2.3.1 Modification of Shyu and Yan type controller

To stabilize (1), let us form a new modification to Shyu and Yan type controller as follows:

$$u(t) = -\left[k\|x(t)\| + \delta\right]\left(B^T PB\right)^{-1}\frac{s(t)}{\|s(t)\|} \tag{4.2.6}$$

where P is a positive definite matrix, k is a scalar feedback gain constant and δ is a relay constant to be designed.

Combined controller modification (6) consists of two parts: 1) Conventional VSC to compensate the parameters and their uncertainties and 2) Relay term to reject the external disturbances.

The integral sliding surface is defined as given by Shyu and Yan (1993) [7]:

$$s(t) = Cx(t) - \int_0^t CA_0x(\tau)d\tau - \int_0^t CA_1x(\tau - h)d\tau \tag{4.2.7}$$

where C is a sliding mode ($m \times n$)-matrix of full rank that can be selected as $C = B^T P$.

Unlike Shyu and Yan (1993) [7], Yan (2003) [21] and Choi (2004) [22] type controllers, our modification (6) has not used the equivalent control term since it is dependent on matching conditions and unknown parameter uncertainties. Indeed, in according to equivalent control method (Utkin, 1977 [29]) we can differentiate $s(t)$ with respect to the time:

$$\begin{aligned}\dot{s}(t) &= B^T P\dot{x}(t) - B^T PA_0x(t) - B^T PA_1x(t-h) = B^T PA_0x(t) + B^T P\Delta A_0(\sigma)x(t) + B^T PA_1x(t-h)\\ &+ B^T P\Delta A_1(\sigma)x(t-h) + B^T PDf(t) + B^T PBu(t) - B^T PA_0x(t) - B^T PA_1x(t-h)\\ &= B^T P\Delta A_0x(t) + B^T P\Delta A_1x(t-h) + B^T PDf(t) + B^T PBu(t)\end{aligned} \tag{4.2.8}$$

and obtain the equivalent control term from $\dot{s}(t) = 0$ (8) as follows:

$$u_{eq}(t) = -\left(B^T PB\right)^{-1}B^T P\Delta A_0x(t) - \left(B^T PB\right)^{-1}B^T P\Delta A_1x(t-h) - \left(B^T PB\right)^{-1}B^T PDf(t) \tag{4.2.9}$$

It is clear that equivalent control term cannot be synthesized explicitly as it involves the unknown parameter uncertainties (Ryan, 1983 [30]; El-Ghezawi, Zinober and Billings, 1983 [31]).

4.2.3.2 Mismatching Sliding Conditions

After selecting the sliding surface the next step is to choose the scalar feedback gains k, δ and design matrix P such that the stable sliding mode can exist.

Theorem 1: Suppose that Assumption 2 holds. Then the delay-independent uniformly ultimately boundedness sliding mode can always be generated on the integral sliding surface $s(t) = 0$ (7) defined for mismatched perturbed system (1) driven by controller (6), (7), if the following conditions are satisfied:

$$\|x(t-h)\| < \frac{k - \omega a_0}{\omega a_1}\|x(t)\| \tag{4.2.10}$$

$$\delta = \omega d\theta \tag{4.2.11}$$

Published by WSEAS Press
www.wseas.org
ISBN: 978-960-474-050-5
ISSN: 1790-5117

where $\omega = \left\| B^T P \right\| = \sqrt{\lambda_{\max}(PBB^T P)}$

Proof: Define a positive definite Lyapunov function

$$V(t) = \frac{1}{2} s^T(t) s(t) \tag{4.2.12}$$

The time-derivative of (12) along the trajectory of the system (1), (6), (7) can be calculated as follows

$$\dot{V} = s^T(t)\dot{s}(t) = s^T(t)\left[B^T P\Delta A_0 x(t) + B^T P\Delta A_1 x(t-h) + B^T PDf(t) + B^T PBu(t)\right]$$

$$= s^T(t)B^T P\Delta A_0 x(t) + s^T(t)B^T P\Delta A_1 x(t-h) + s^T(t)B^T PDf(t) - k\|x(t)\| s^T(t)B^T PB(B^T PB)^{-1}\frac{s(t)}{\|s(t)\|}$$

$$-\delta s^T(t)B^T PB(B^T PB)^{-1}\frac{s(t)}{\|s(t)\|}$$

$$\le \omega a_0 \|s(t)\|\|x(t)\| + \omega a_1 \|s(t)\|\|x(t-h)\| + \omega d\theta \|s(t)\| - k\|s(t)\|\|x(t)\| - \delta\|s(t)\|$$

$$= -(k - \omega a_0)\|s(t)\|\|x(t)\| + \omega a_1 \|s(t)\|\|x(t-h)\| - (\delta - \omega d\theta)\|s(t)\| \tag{4.2.13}$$

If the second condition (11) is satisfied, then (13) becomes

$$\dot{V} \le -(k - \omega a_0)\|s(t)\|\|x(t)\| + \omega a_1 \|s(t)\|\|x(t-h)\| \tag{4.2.14}$$

The first condition (10) can be rewritten formally similar to Razunikhin-Hale type theorem (Razumikhin, 1956 [32]; Hale, 1977 [33]) condition:

$$\|x(t-h)\| < q\|x(t)\| \quad \text{where} \quad \frac{k - \omega a_0}{\omega a_1} = q > 1 \tag{4.2.15}$$

Such choice of scalar $q > 1$ is successfully used in many illustrative examples by Hale (1977) [33], Cheres, Gutman and Palmar (1989) [25], Shyu and Yan (1993) [7], etc. Mahmoud and Al-Muthairi (1994) [34] treat q even as an adjustable parameter at the disposal of the control designer. For this reason, we shall treat q as a known scalar, which is selected in accordance with Razumikhin-Hale type theorem. As a result, we will have freedom of changing our controller design parameters such that the sliding conditions are satisfied.

Hence, if condition (10) is satisfied then (14) reduces to

$$\dot{V} < 0 \tag{4.2.16}$$

Therefore, we conclude that on the integral sliding surface $s(t) = 0$ (7) a uniformly ultimately boundedness sliding mode is generated. But, a sliding region is restricted by (15). Note that, the usage of Razumikhin-Hale type theorem is sometimes inconvenient.

4.2.4 Sliding mode controller design method

In this section a new combined sliding mode controller design technique for the stabilization of multivariable single state-delayed systems with mismatching parameter perturbations is advanced. The sliding, global stability and β-stability conditions are parametrically obtained by using Lyapunov-Krasovskii V-functional method and formulated in terms of matrix inequalities.

4.2.4.1 Combined control law

Construct the combined sliding mode controller as follows:

$$u(t) = -\left[k\|x(t)\| + \delta\right]\left(B^T PB\right)^{-1}\frac{s(t)}{\|s(t)\|} \tag{4.2.17}$$

where P is a positive definite matrix, k is a scalar feedback gain and δ is a relay constant to be designed. Note that, combined variable structure controller (17) is norm bounded in the sense that $\|u(t)\| \le \left[k\|x(t)\| + \delta\right]\lambda_{\max}\left(B^T PB\right)^{-1}$. If $k = 0$, then we have Choi type of bounded switching feedback controller (Choi, 2004): $u(t) = -\delta\left(B^T PB\right)^{-1}\frac{s(t)}{\|s(t)\|}$.

But the sliding surface is defined in the conventional form (Young, Utkin and Özgüner 1999 [35], Dorling and Zinober 1988 [36] and etc.):

$$s(t) = B^T Px(t) \tag{4.2.18}$$

Published by WSEAS Press
www.wseas.org
ISBN: 978-960-474-050-5
ISSN: 1790-5117

4.2.4.2 Mismatching sliding conditions

The following theorem summarizes our mismatching sliding conditions.

Theorem 2: Suppose that Assumption 2 holds. Then the delay-independent asymptotically stable sliding mode can always be generated on the conventional sliding surface $s(t)=0$ (18) defined for the mismatched perturbed system (1) driven by controller (17) and (18), if the following conditions are satisfied:

$$\begin{aligned} &PBB^T PA_0 + A_0{}^T PBB^T P - (2k\omega_1 - \mu)PBB^T P \\ &+ 2\omega^2 a_0 I_n + \omega^2 a_1 I_n \equiv -Q \le 0 \end{aligned} \tag{4.2.19}$$

where Q in general is a non-symmetric matrix; and $\omega^2 a_1 I_n - \mu \mathrm{PBB^T} P \le 0$ or

$$H = \begin{bmatrix} -Q & PBB^T PA_1 \\ A_1{}^T PBB^T P & \omega^2 a_1 I_n - \mu \mathrm{PBB^T} P \end{bmatrix} \le 0 \tag{4.2.20}$$

$$\delta \ge \omega d\theta \tag{4.2.21}$$

Proof: Define a positive definite Lyapunov-Krasovskii functional as follows:

$$V(s(t), s(t-h)) = s^T(t)s(t) + \mu \int_{t-h}^{t} s^T(\theta)s(\theta)d\theta \tag{4.2.22}$$

where μ is a given positive scalar. Then the time derivative of (22) along the (1), (17) and (18) can be evaluated as follows:

$$\begin{aligned} \dot{V} &= 2s^T(t)\dot{s}(t) + \mu s^T(t)s(t) - \mu s^T(t-h)s(t-h) = 2s^T(t)B^T P\big[A_0 x(t) + \Delta A_0 x(t) + A_1 x(t-h) \\ &+ \Delta A_1 x(t-h) + Bu(t) + Df(t)\big] + \mu s^T(t)s(t) - \mu s^T(t-h)s(t-h) \\ &= x^T(t)\left(PBB^T PA_0 + A_0^T PBB^T P\right)x(t) + 2x^T(t)PBB^T P\Delta A_0 x(t) + 2x^T(t)PBB^T PA_1 x(t-h) \\ &+ 2x^T(t)PBB^T P\Delta A_1 x(t-h) - 2k\|x(t)\|s^T(t)B^T PB\left(B^T PB\right)^{-1}\frac{s(t)}{\|s(t)\|} \\ &+ 2s^T(t)B^T PDf(t) - 2\delta s^T(t)B^T PB\left(B^T PB\right)^{-1}\frac{s(t)}{\|s(t)\|} + \mu x^T(t)PBB^T Px(t) - \mu x^T(t-h)PBB^T Px(t-h) \end{aligned} \tag{4.2.23}$$

Since

$$2x^T(t)PBB^T P\Delta A_0 x(t) \le 2\omega^2 a_0 x^T(t)x(t) \tag{4.2.24}$$

$$2x^T(t)PBB^T P\Delta A_1 x(t-h) \le 2\omega^2 a_1 \|x(t)\|\|x(t-h)\| \tag{4.2.25}$$

$$2s^T(t)B^T PDf(t) \le 2\omega d\theta \|s(t)\| \tag{4.2.26}$$

Then

$$\begin{aligned} \dot{V} &\le x^T(t)\left(PBB^T PA_0 + A_0^T PBB^T P + 2\omega^2 a_0 I_n + \mu PBB^T P\right)x(t) + 2\omega^2 a_1 \|x(t)\|\|x(t-h)\| \\ &+ 2x^T(t)PBB^T PA_1 x(t-h) - 2k\|x(t)\|\|s(t)\| + 2\omega d\theta\|s(t)\| - 2\delta\|s(t)\| - \mu x^T(t-h)PBB^T Px(t-h) \end{aligned} \tag{4.2.27}$$

Since

$$\|s(t)\| = \|B^T Px(t)\| \le \|B^T P\|\|x(t)\| = \omega\|x(t)\| \tag{4.2.28}$$

and

$$\|x(t)\| \ge \frac{1}{\omega}\|s(t)\| = \omega_1\|s(t)\| \quad \text{where } \omega_1 = \frac{1}{\omega} \tag{4.2.29}$$

Hence

$$-2k\|x(t)\|\|s(t)\| \le -2k\omega_1\|s(t)\|^2 = -2k\omega_1 s^T(t)s(t) \tag{4.2.30}$$

Then

$$\begin{aligned} \dot{V} &\le x^T(t)\left[PBB^T PA_0 + A_0^T PBB^T P + 2\omega^2 a_0 I_n + \mu PBB^T P - 2k\omega_1 PBB^T P\right]x(t) + 2\omega^2 a_1 \|x(t)\|\|x(t-h)\| \\ &+ 2x^T(t)PBB^T PA_1 x(t-h) - \mu x^T(t-h)PBB^T Px(t-h) - 2(\delta - \omega d\theta)\|s(t)\| \end{aligned} \tag{4.2.31}$$

Since $2ab \le a^2 + b^2$

where a and b are some scalars, then

$$2\omega^2 a_1 \|x(t)\|\|x(t-h)\| \le \omega^2 a_1 x^T(t)x(t) + \omega^2 a_1 x^T(t-h)x(t-h) \tag{4.2.32}$$

Published by WSEAS Press
www.wseas.org
ISBN: 978-960-474-050-5
ISSN: 1790-5117

Then (31) can be arranged as a full quadratic form:

$$\dot{V} \le x^T(t)\left[PBB^T PA_0 + A_0^T PBB^T P + 2\omega^2 a_0 I_n + \omega^2 a_1 I_n + \mu PBB^T P - 2k\omega_1 PBB^T P\right]x(t)$$
$$+2x^T(t)PBB^T PA_1 x(t-h) + x^T(t-h)(\omega^2 a_1 I_n - \mu PBB^T P)x(t-h) - 2(\delta - \omega d\theta)\|s(t)\|$$
$$= \begin{bmatrix} x(t) \\ x(t-h) \end{bmatrix}^T \begin{bmatrix} -Q & PBB^T PA_1 \\ A_1^T PBB^T P & \omega^2 a_1 I_n - \mu \mathrm{PBB^T} P \end{bmatrix} \begin{bmatrix} x(t) \\ x(t-h) \end{bmatrix} - 2(\delta - \omega d\theta)\|s(t)\| \tag{4.2.33}$$

If conditions (19), (20), (21) are satisfied then (33) reduces to:

$$\dot{V} \le -\begin{bmatrix} x(t) \\ x(t-h) \end{bmatrix}^T H \begin{bmatrix} x(t) \\ x(t-h) \end{bmatrix} - 2(\delta - \omega d\theta)\|s(t)\| \tag{4.2.34}$$
$$\le -2(\delta - \omega d\theta)\|s(t)\| < 0 \quad \text{since} \quad \lambda_{\min}(H) = 0$$

Therefore, we conclude that the robustly asymptotically stable sliding mode can always be generated on the sliding surface $s(t) = 0$ (18). Theorem 2 is proved.

4.2.4.3 Global stability conditions

We now examine the robust global asymptotical stability with respect to the state coordinates $x(t)$ of perturbed time-delay system (1) driven by variable structure controller (17), (18). The following theorem summarizes our global stability conditions, which are obtained by using Lyapunov-Krasovskii V-functional method and formulated in terms of some matrix inequalities.

Theorem 3: Suppose that Assumption 1 (last equation) holds. Then the time-delay system (1) with mismatched parameter uncertainties and matched external disturbances driven by variable structure controller (17), (18) is globally delay-independent asymptotically stable, if the following conditions are satisfied:

$$PA_0 + A_0^T P - 2k\omega_1 \lambda_{\min}(B^T PB)^{-1} PBB^T P + 2a_0 \lambda_{\max}(P) I_n + a_1 \lambda_{\max}(P) I_n + \mu R \equiv -Q \le 0 \tag{4.2.35}$$

where Q in general is a non-symmetric matrix and

$a_1 \lambda_{\max}(P) I_n - \mu R \le 0$ or

$$H = \begin{bmatrix} -Q & PA_1 \\ A_1^T \mathrm{P} & a_1 \lambda_{\max}(P) I_n - \mu R \end{bmatrix} \le 0 \tag{4.2.36}$$

$$\delta \lambda_{\min}(B^T PB) \ge \eta\theta \tag{4.2.37}$$

Proof: Choose a Lyapunov-Krasovskii functional candidate as follows:

$$V(x(t), x(t-h)) = x^T(t)Px(t) + \mu \int_{t-h}^{t} x^T(\theta)Rx(\theta)d\theta \tag{4.2.38}$$

where P and R are some positive definite matrices, μ is a positive scalar. Then, the time derivative of (38) along the trajectory of system (1), (17), (18) can be evaluated similar to the proof of Theorem 2 as follows:

$$\dot{V} \le \begin{bmatrix} x(t) \\ x(t-h) \end{bmatrix}^T \begin{bmatrix} -Q & PA_1 \\ A_1^T \mathrm{P} & a_1 \lambda_{\max}(P) I_n - \mu R \end{bmatrix} \begin{bmatrix} x(t) \\ x(t-h) \end{bmatrix} - 2[\delta \lambda_{\min}(P) - \eta\theta]\|s(t)\| \tag{4.2.39}$$

If conditions (35), (36), (37) are satisfied then (39) reduces to:

$$\dot{V} \le -\begin{bmatrix} x(t) \\ x(t-h) \end{bmatrix}^T H \begin{bmatrix} x(t) \\ x(t-h) \end{bmatrix} - 2[\delta \lambda_{\min}(P) - \eta\theta]\|s(t)\| \tag{4.2.40}$$
$$\le -2[\delta \lambda_{\min}(P) - \eta\theta]\|s(t)\| < 0 \quad \text{since} \quad \lambda_{\min}(H) = 0$$

Therefore, we conclude that perturbed closed-loop system (1), (17), (18) with mismatched parameter uncertainties and matched external disturbances is globally asymptotically stable with respect to the state coordinates $x(t)$. Theorem 3 is proved.

4.2.4.4 β-stability conditions

β-stability conditions are formulated in the following corollary.

Corollary 1: Suppose that Assumption 1 (last equation) and the conditions of Theorem 3 are met. Then the time-delay system (1) with mismatched parameter uncertainties and matched external

Published by WSEAS Press
www.wseas.org
ISBN: 978-960-474-050-5
ISSN: 1790-5117

disturbances driven by variable structure controller (17), (18) is globally asymptotically delay-dependent stable with a stability degree $\beta > 0$, if the following conditions are satisfied:

$$P(A_0 + \beta I_n) + (A_0 + \beta I_n)^T P - 2k\omega_1 \lambda_{\min}(B^T PB)^{-1} PBB^T P + 2a_0 \lambda_{\max}(P) I_n + a_1 \lambda_{\max}(P) I_n + \mu R \equiv -Q \le 0 \tag{4.2.41}$$

where Q in general is a non-symmetric matrix, and

$e^{\beta h} a_1 \lambda_{\max}(P) I_n - \mu R \le 0$ or

$$H = \begin{bmatrix} -Q & e^{\beta h} PA_1 \\ e^{\beta h} A_1^T P & e^{\beta h} a_1 \lambda_{\max}(P) I_n - \mu R \end{bmatrix} \le 0 \tag{4.2.42}$$

$$\delta \lambda_{\min}(B^T PB) \ge \eta\theta \tag{4.2.43}$$

Proof: Utilize (5) to transform (1), (17) and (18) into following equations:

$$\dot{z}(t) = (A_0 + \beta I_n) z(t) + e^{\beta h} A_1 z(t-h) + \Delta A_0(\sigma) z(t) + e^{\beta h} \Delta A_1(\sigma) z(t-h) + B\bar{u}(t) + D\bar{f}(t) \tag{4.2.44}$$

where

$$\bar{u}(t) = e^{\beta t} u(t) = -e^{\beta t}\left[k\|x(t)\| + \delta\right]\left(B^T PB\right)^{-1} \frac{s(t)}{\|s(t)\|} = -\left[k\|z(t)\| + \delta e^{\beta t}\right]\left(B^T PB\right)^{-1} \frac{\bar{s}(t)}{\|\bar{s}(t)\|} \tag{4.2.45}$$

and

$$\bar{s}(t) = e^{\beta t} s(t) = B^T Pe^{\beta t} x(t) = B^T Pz(t) \tag{4.2.46}$$

respectively.

Now, choose a Lyapunov-Krasovskii functional as

$$V(z(t), z(t-h)) = z^T(t) Pz(t) + \mu \int_{t-h}^{t} z^T(\theta) Rz(\theta) d\theta \tag{4.2.47}$$

where P and R are positive definite matrices, μ is a positive scalar. Then, the time derivative of (47) along the trajectory of transformed system (44), (45), (46) can be evaluated similar to the proof of Theorem 3 as follows:

$$\dot{V} \le \begin{bmatrix} z(t) \\ z(t-h) \end{bmatrix}^T \begin{bmatrix} -Q & e^{\beta h} PA_1 \\ e^{\beta h} A_1^T P & e^{\beta h} a_1 \lambda_{\max}(P) I_n - \mu R \end{bmatrix} \begin{bmatrix} z(t) \\ z(t-h) \end{bmatrix} - 2\left[\delta \lambda_{\min}(B^T PB)^{-1} - \eta\theta\right]\|\bar{s}(t)\| \tag{4.2.48}$$

If conditions (41), (42), (43) are satisfied then (48) reduces to:

$$\dot{V} \le \begin{bmatrix} z(t) \\ z(t-h) \end{bmatrix}^T H \begin{bmatrix} z(t) \\ z(t-h) \end{bmatrix} - 2\left[\delta \lambda_{\min}(B^T PB)^{-1} - \eta\theta\right]\|\bar{s}(t)\| \le -2\left[\delta \lambda_{\min}(B^T PB)^{-1} - \eta\theta\right]\|\bar{s}(t)\|$$

since $\lambda_{\min}(H) = 0$ (4.2.49)

Therefore, we conclude that perturbed transformed closed-loop system (44), (45), (46) with mismatched parameter uncertainties and matched external disturbances is globally asymptotically delay-dependent β-stable with respect to the new state coordinates $z(t)$. Maximum upper bound $\bar{h}$ of delay size can be determined from condition (42). Corollary 1 is proved.

4.2.5 Example: Aircraft control design

Now, consider a numerical design example to illustrate the controller design procedure described in section 4.2.4 for lateral control of AV-8A Harrier VTOL aircraft in a hover mode. The linearized unstable lateral dynamic model with nominal parameters for this aircraft was taken from (Calise and Kramer, 1984 [37]):

$$\dot{x}(t) = A_0 x(t) + Bu(t)$$
$$y(t) = Cx(t)$$

where, state vector is represented by $x^T = [\psi \ \phi \ \upsilon \ \mathrm{r} \ \mathrm{p}]$,

ψ is the Euler yaw attitude perturbation (rad),

ϕ is the Euler roll attitude perturbation (rad),

υ is the velocity perturbation along body y-axis (m/s),

Published by WSEAS Press
www.wseas.org
ISBN: 978-960-474-050-5
ISSN: 1790-5117

r is the body-axis yaw rate (rad/s),

p is the body-axis roll rate (rad/s),

the control inputs are $u^T = [\delta_{LAT} \;\; \delta_{RUD}]$,

δ_{LAT} is the lateral stick perturbation (cm),

δ_{RUD} is the rudder pedal perturbation (cm),

and the system, control and output matrices are given:

$$A_0 = \begin{bmatrix} 0 & 0 & 0 & 1 & 0 \\ 0 & 0 & 0 & 0 & 1 \\ 0 & 9.8 & -0.042 & 0 & 0 \\ 0 & 0 & -0.007 & -0.06 & -0.075 \\ 0 & 0 & -0.039 & 0.11 & -0.260 \end{bmatrix} \qquad B = \begin{bmatrix} 0 & 0 \\ 0 & 0 \\ 0 & -0.27 \\ 0.0055 & 0.085 \\ 0.177 & -0.033 \end{bmatrix}$$

For the simulation of system (1), (17) the parameter perturbations are assumed as follows:

$\Delta A_0 = 0.2\sin(t)A_0$, $\Delta A_1 = 0.2\cos(t)A_1$, $A_1 = 0.3A_0$

Aircraft model has really some small time-delay because of pilot's (or commands) effective time delay (Blakelock, 1991 [38]) and transports delays of aircraft mechanical and hydraulic servomechanisms. For simulation we select $\tau = 0.24s$.

The design procedure of sliding mode controller (17) can be fulfilled by the following steps:

- Select a matrix E such that matching condition for external disturbance holds:

$$D = B\,E = \begin{bmatrix} 0 & 0 \\ 0 & 0 \\ 0 & -0.27 \\ 0.0055 & 0.085 \\ 0.177 & -0.033 \end{bmatrix} \begin{bmatrix} 0 & 0 & 0 & 0.2 & 0 \\ 0 & 0 & 0.1 & 0 & 0.2 \end{bmatrix} = \begin{bmatrix} 0 & 0 & 0 & 0 & 0 \\ 0 & 0 & 0 & 0 & 0 \\ 0 & 0 & -0.027 & 0 & -0.054 \\ 0 & 0 & 0.0085 & 0.0011 & 0.017 \\ 0 & 0 & -0.0033 & 0.0354 & -0.0066 \end{bmatrix}$$

Find the eigenvalues of matrix A_0

$$\mathrm{Eig}(A_0) = 0;\; 0.2715 \pm 0.6239i;\; -0.8253;\; -0.0798$$

A_0 is an unstable matrix.

- Solve matrix inequality (19) by using special programming in Matlab.

```
clear
clc
a0=1.96;
a1=0.588;
A0=[0 0 0 1 0;0 0 0 0 1;0 9.8 -0.042 0 0;
0 0 -0.007 -0.06 -0.075;0 0 -0.039 0.11 -0.260];
B=[0 0;0 0;0 -0.27;0.0055 0.085;0.177 -0.033];
k=2.5;
mu=0.5;
Q=[1 0 0 0 0;0 1 0 0 0;0 0 1 0 0;0 0 0 1 0;0  0 0  0 1];
  In=Q;
X=[0.1667 0 0 0 0;0 0.0942 -0.0470 0 0;0 -0.0470 0.9265 0 0;
0 0 0 0.2083 0;0 0 0 0 0.1471];
for i=1:5
    for j=1:5
           if X(i,j)==X(j,i)
              P(i,j)=X(i,j);
           else
              P(i,j)=[ ]
```


Published by WSEAS Press
www.wseas.org
ISBN: 978-960-474-050-5
ISSN: 1790-5117

```
            end
    end
end

if det(P)>0
    P_det=det(P)
else  det(P)<0
‘change the elements of X to make the determinant of X positive'
end
P_line=P*B*B'*P
lambda=eig(P_line)
max_eig=max(lambda)
omega=sqrt(max_eig)
omega1=1/omega
MI=P_line*A0+A0'*P_line-(2*k*omega1-mu)*P_line+2*omega^2*a0*In+omega^2*a1*In+Q
MI_det=det(MI)

if det(MI) <=0
    MI_det=det(MI)
else
    'change the elements of X to make the inequality satisfied'
end
```

- $$P=\begin{bmatrix} 0.1667 & 0.0000 & -0.0000 & 0.0000 & -0.0000 \\ 0.0000 & 0.0942 & -0.0470 & 0.0000 & -0.0000 \\ -0.0000 & -0.0470 & 0.9265 & -0.0000 & 0.0000 \\ 0.0000 & 0.0000 & -0.0000 & 0.2083 & -0.0000 \\ -0.0000 & -0.0000 & 0.0000 & -0.0000 & 0.1471 \end{bmatrix}$$

  eig(P) = 0.0915, 0.1471, 0.1667, 0.2083, 0.9292

  $\lambda_{\min}(P)=0.0915,\ \ \lambda_{\max}(P)=0.9292$

  $$\overline{P}=PBB^TP=\begin{bmatrix} 0.0000 & 0.0000 & -0.0000 & 0.0000 & -0.0000 \\ 0.0000 & 0.0002 & -0.0032 & 0.0002 & -0.0001 \\ -0.0000 & -0.0032 & 0.0626 & -0.0044 & 0.0012 \\ 0.0000 & 0.0002 & -0.0044 & 0.0003 & -0.0001 \\ -0.0000 & -0.0001 & 0.0012 & -0.0001 & 0.0007 \end{bmatrix}$$

  $\mathrm{eig}(\overline{\mathrm{P}})=0.0000, 0.0631, 0.0007, 0.0000, 0.0000$

  which is a positive semi-definite matrix, $\lambda_{\max}(\overline{P})=0.0631$, $\omega=\sqrt{0.0631}=0.2511$,

  $\omega_1=3.9817$.

  $$Q=\begin{bmatrix} 1 & 0 & 0 & 0 & 0 \\ 0 & 1 & 0 & 0 & 0 \\ 0 & 0 & 1 & 0 & 0 \\ 0 & 0 & 0 & 1 & 0 \\ 0 & 0 & 0 & 0 & 1 \end{bmatrix}$$

Choose k=2.5

Matrix inequality (19) hold

Published by WSEAS Press
www.wseas.org
ISBN: 978-960-474-050-5
ISSN: 1790-5117

$$MI = \begin{bmatrix} 1.2843 & 0 & 0 & 0 & 0 \\ 0 & 1.2190 & 0.6750 & -0.0478 & 0.0133 \\ 0 & 0.6750 & 0.0645 & 0.0865 & -0.0268 \\ 0 & -0.0478 & 0.0865 & 1.2782 & 0.0014 \\ 0 & 0.0133 & -0.0268 & 0.0014 & 1.2703 \end{bmatrix}$$

because this matrix is negative definite and det(MI)= -0.8126

- Calculate the following matrix norm from (3):

  $a_0 = \max_{\sigma} \|\Delta A_0\| = \|0.2 * A_0\| = 1.96$

  $a_1 = \max_{\sigma} \|\Delta A_1\| = \|0.06 * A_0\| = 0.588$

  $\eta = 0.2236$, $d = 0.0639$, $\theta = 0.2$.

- Calculate $B^T PB = \begin{bmatrix} 0.0046 & -0.0008 \\ -0.0008 & 0.0692 \end{bmatrix}$;

  $(B^T PB)^{-1} = \begin{bmatrix} 217.8293 & 2.5183 \\ 2.5183 & 14.4800 \end{bmatrix}$;

  $B^T P = \begin{bmatrix} 0 & 0 & 0 & 0.0011 & 0.0260 \\ 0 & 0.0127 & -0.2502 & 0.0177 & -0.0049 \end{bmatrix}$.

  $eig(B^T PB) = 0.0046, 0.0692$, which is positive definite matrix with $\lambda_{\max} = 0.0692$.

- Calculate matrix inequality (20)

$$H = \begin{bmatrix} -1 & 0 & 0 & 0 & 0 & 0 & 0 & 0 & 0 & 0 \\ 0 & -1 & 0 & 0 & 0 & 0 & -0.0093 & 0.0000 & -0.0000 & 0.0000 \\ 0 & 0 & -1 & 0 & 0 & 0 & 0.1840 & -0.0008 & 0.0001 & -0.0009 \\ 0 & 0 & 0 & -1 & 0 & 0 & -0.0130 & 0.0001 & -0.0000 & 0.0001 \\ 0 & 0 & 0 & 0 & -1 & 0 & 0.0036 & -0.0000 & 0.0000 & -0.0001 \\ 0 & 0 & 0 & 0 & 0 & 0.0371 & 0 & 0 & 0 & 0 \\ 0 & -0.0093 & 0.1840 & -0.0130 & 0.0036 & 0 & 0.0370 & 0.0016 & -0.0001 & 0.0000 \\ 0 & 0.0000 & -0.0008 & 0.0001 & -0.0000 & 0 & 0.0016 & 0.0058 & 0.0022 & -0.0006 \\ 0 & -0.0000 & 0.0001 & -0.0000 & 0.0000 & 0 & -0.0001 & 0.0022 & 0.0369 & 0.0000 \\ 0 & 0.0000 & -0.0009 & 0.0001 & -0.0001 & 0 & 0.0000 & -0.0006 & 0.0000 & 0.0367 \end{bmatrix}$$

which is negative definite and det(H)= -2.0144e-008

- Select δ from (21) $\delta \geq 0.0032$.

Block diagram of system (1), (17), (18) with VTOL aircraft parameters is shown in Figure 1. Simulation results using MATLAB-SIMULINK are shown in Figure 2,3,4. As seen, unstable lateral dynamics are successfully stabilized by using combined sliding mode controller. The control performances are satisfactory. Time responses by designed controller are compared with those by Choi type controller. The structure of Choi type controller is similar to that of combined controller. Simulation results are presented in Figure 5,6,7. As seen, Choi type controller, in general, can stabilize unstable lateral dynamics model. However, Choi type controller has a steady state error. Thus, design procedures and simulation results show that our advanced method is useful. And unstable lateral dynamics is successfully stabilized by using combined controller. Not that, as seen from Fig. 4 designed controller has some chattering effect, which is undesirable in practical implementations. In order to reduce the control chattering, the discontinuous switching function in (17) can be replaced by a well known continuous type saturation functions (Slotine and Li, 1991 [39]),

Published by WSEAS Press
www.wseas.org
ISBN: 978-960-474-050-5
ISSN: 1790-5117

(Esfendiari and Khalil, 1991 [40]), (Jafarov and Tasaltin, 2000 [41] and 2001 [42]) and (Mahmoud and Al-Muthairi, 1994 [34]).

4.2.6 Conclusions

Robust delay-dependent stabilization of multivariable single state-delayed systems with mismatching parameter uncertainties and matching/mismatching external disturbances is considered. To achieve this goal two types of sliding mode controllers design techniques are advanced. The first is an integral sliding mode controller design modification to Shyu and Yan type controller design. The mismatching sliding conditions are parametrically obtained by using Lyapunov-Razumikhin-Hale method and formulated in terms of some matrix norm inequalities. In second contribution, a new combined sliding mode controller design technique for the stabilization of multivariable single state-delayed systems with mismatching parameter perturbations is advanced. The delay-independent sliding, global stability and delay-dependent β-stability conditions are parametrically obtained by using Lyapunov-Krasovskii V-functional method and formulated in terms of some matrix inequalities. A sliding mode controller design example for AV-8A Harrier VTOL aircraft with lateral unstable dynamic model parameters is considered to illustrate the controller design method. Design procedures and simulation results show that our advanced method is useful. And unstable lateral dynamics is successfully stabilized by using combined controller. The results of section 4.2 is published by Jafarov (2005) [43].

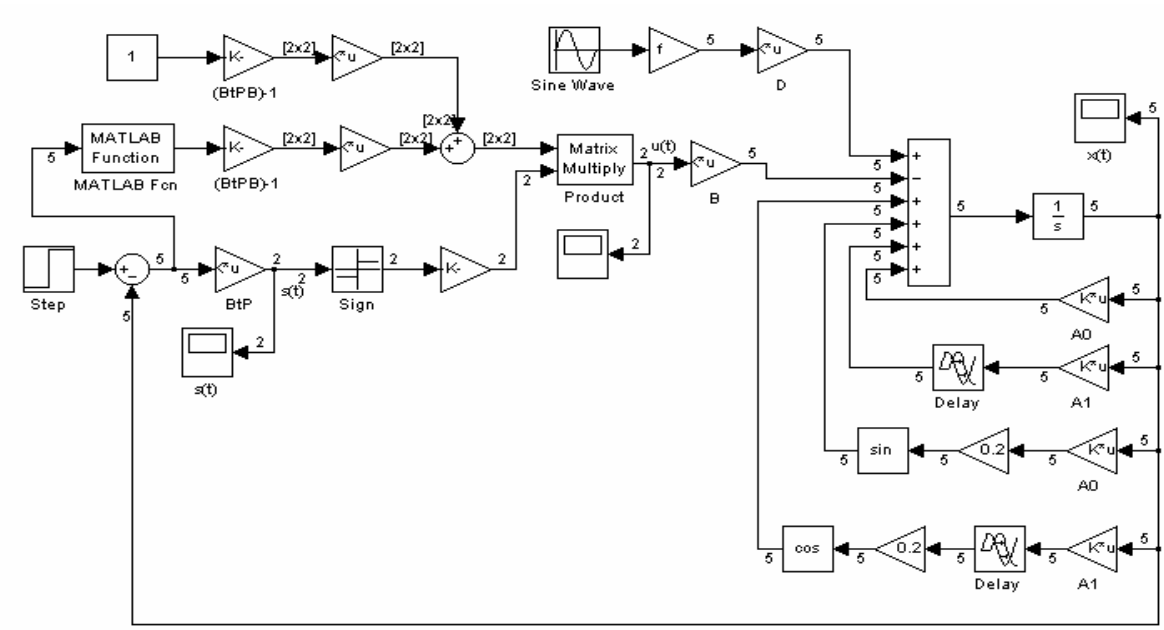

Figure 4.1 Block-diagram of multi-variable time-delay system with combined sliding mode controller.

Combined controller

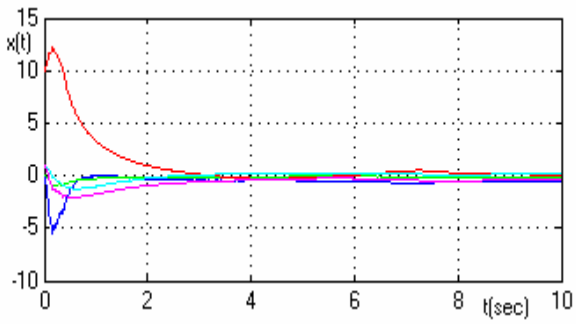

Figure 4.2 State responses

Choi type controller

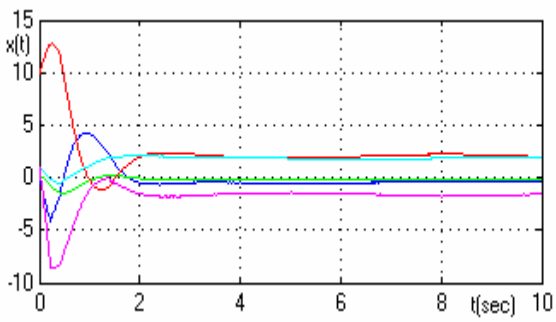

Figure 4.5 State responses

Published by WSEAS Press
www.wseas.org
ISBN: 978-960-474-050-5
ISSN: 1790-5117

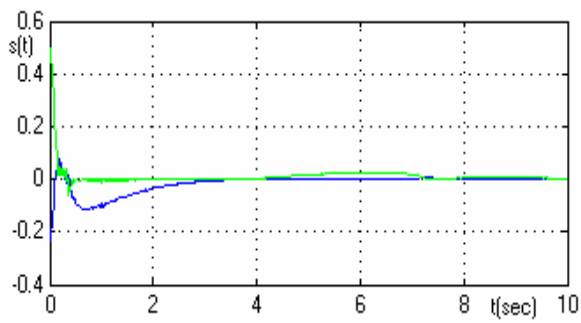

Figure 4.3 Switching function

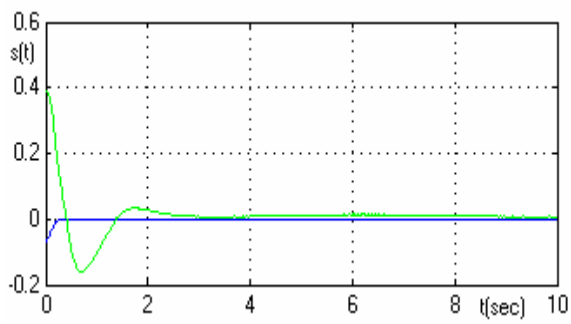

Figure 4.6 Switching function

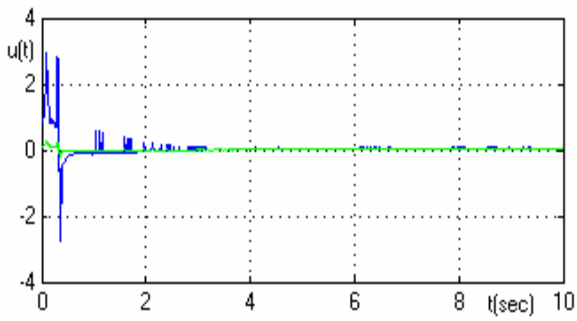

Figure 4.4 Control function

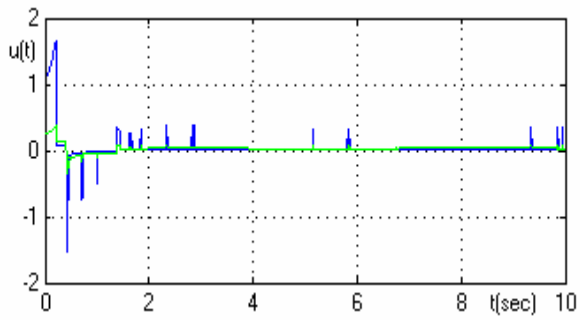

Figure 4.7 Control function

4.3 New Sliding Mode Controllers Design for Multiple Time-Delay Systems

4.3.1 Introduction

In this paragraph, the problem of sliding mode controller design methods for both certain and uncertain multi-input systems with several fixed state delays is addressed. Two types of sliding mode controllers are proposed: 1) Simple sliding mode controller is designed for the stabilization of certain time-delay systems and 2) Combined sliding mode controller is designed for the stabilization of uncertain time-delay systems with parameter perturbations and external disturbances. Delay-independent sufficient conditions are given for the existence of a sliding mode and the robust asymptotic stability of the closed-loop systems by using Lyapunov-Krasovskii functional method combined with matrix inequality techniques. Some new matrix inequalities are evaluated for mathematical analysis of time-delay systems. Feasibility of hard solvable matrix inequalities by using modified algebraic Riccati equations is discussed.

Two numerical examples with simulation results are given to illustrate the usefulness of the proposed design methods.

4.3.2 Brief analysis of existing controllers

It is well known that many engineering control systems such as conventional oil-chemical industrial processes, nuclear reactors, long transmission lines in pneumatic, hydraulic and rolling mill systems, flexible joint robotic manipulators and machine-tool systems, jet engine and automobile control, human-autopilot systems, ground controlled satellite and communication systems, space autopilot and missile-guidance systems, etc. contain some time-delay effects, model uncertainties and external disturbances. These processes and plants can be modeled by some uncertain dynamical systems with state and input delays. The existence of time-delay effects is frequently a source of instability and it degrades the control performances. The stabilization of systems with time-delay is not easier than that

Published by WSEAS Press
www.wseas.org
ISBN: 978-960-474-050-5
ISSN: 1790-5117

of systems without time-delay. Therefore, the problem of robust stabilization of uncertain time-delay systems by various types of controllers such as PID controller, Smith predictor, and time-delay controller, recently, sliding mode controllers have received considerable attention of researchers. However, in contrast to variable structure systems without time-delay, there is no large number of papers concerning sliding mode control of time-delay systems. As known from Utkin (1977) [29] and Sabanovic, Fridman and Spurgeon (2004) [2] etc. sliding mode control has several useful advantages, e.g. fast response, good transient performance, and robustness to the plant parameter variations and external disturbances. For this reason, now, sliding mode control is considered as an efficient tool to design of robust controllers for stabilization of complex systems with parameter perturbations and external disturbances.

A brief review of the first attempts in this area is given by Jafarov (1998) [14]. Shyu and Yan (1993) [7] have established a new sufficient condition to guarantee the robust stability and β-stability for uncertain systems with single time-delay. By these conditions a variable structure controller is designed to stabilize time-delay systems with plant uncertainties. However, a variable structural controller is designed only for nominal time-delay system. The sliding surface is defined in the linear switching functional form, practice implementation of which is not easy. Koshkoei and Zinober (1996) [10] have successfully designed a new sliding mode controller for MIMO canonical controllable time-delay systems with matched parameter uncertainties and external disturbances by using Lyapunov-Krasovskii functional. A limitation of this design is that the matching conditions cannot always be hold especially for external disturbances.

Robust stabilization of time-delay systems with uncertainties by using sliding mode control has been considered by Luo, De La Sen and Rodellar (1997) [9]. However, disadvantage of this design approach is that, a variable structure controller is not simple. Moreover, equivalent control term depends on unavailable external disturbances. Sliding mode controllers for canonical single-input (Jafarov, 1998 [14]) and multi-input (Jafarov, 1990 [45]) time-delay systems by using Lyapunov-Krasovskii functional have been designed by Jafarov (1998) [14] and (1990) [45]. Variable structure controllers for time-delay systems have been considered by Zheng, Cheng and Gao (1993) [46]. Canonical delay-free form transformed variable structure system is designed by Hu, Basker and Crisalle (1998) [47].

One type of sliding mode control with memory for certain multivariable systems with several state delays is considered by Jafarov (2000) [48]. Li and DeCarlo (2001) [16] have proposed a new robust memoryless sliding mode control design method for a class of uncertain time-delay systems with multiple fixed state delays. The system has both structured matched (possible unmatched) parameter uncertainties and norm-bounded matched disturbances. A new combined control law is proposed. This control law consists of four terms: 1) Memoryless linear control for the stabilization of nominal system without time-delay; 2) The equivalent control including all state delays for the stabilization of nominal systems with time-delay. 3) Continuous control component depending on some function of switching variable multiplicated by the sum of state and state delays norms for the overcome the parameter uncertainties and 4) Discontinuous quasi-relay type control plus constant term for rejection of disturbance which used to drive system state trajectories on to the defined sliding manifold. Asymptotic stability of time-delay systems restricted to the sliding surface is considered by using the Lyapunov-Krasovskii functional combined by LMI's techniques. Reaching condition of the time-delay system driven by combined controller also is derived by using sliding mode control theory. A numerical example with simulation results illustrates the effectiveness of the design methodology. However, disadvantage of such design is that, a combined variable structure controller has four terms and their practical implementation is not simple. Moreover, sliding and stability conditions are formulated in terms of unknown variables, which may be lead to uniformly ultimately boundedness. Advanced results of robust sliding mode control of uncertain time-delay systems are successfully presented by Li and DeCarlo (2003) [17]. Some new theorems for solvability of matrix inequalities are given.

The behavior and design of sliding mode control systems with state and input delays are considered by Perruquetti and Barbot (2002) [18] using Lyapunov-Krasovskii functional.

Published by WSEAS Press
www.wseas.org
ISBN: 978-960-474-050-5
ISSN: 1790-5117

Four-term robust sliding mode controllers for matched uncertain systems with single or multiple, constant or time varying state delays are designed by Gouaisbaut, Dambrine and Richard (2002) [20] by using Lyapunov-Krasovskii functionals and Lyapunov-Razumikhin function combined with LMI's techniques.

A robust sliding mode control of single state delayed uncertain systems with parameter perturbations and external disturbances is designed by Jafarov (2003) [49].

In general, an overview of some recent advances and open problems in time-delay systems and sliding mode control for systems with input/output delays is given in large survey paper by Richard (2003) [23]. Some delay-dependent stability criteria for time-delay systems are advanced by Jafarov (2003) [17]. Recent advances in time-delay systems using Lyapunov-Krasovskii functionals (Krasovski, 1959 [18]) is given by Niculescu and Gu (2004) [50], and Gu, Kharitonov and Chen (2003) [51].

Several new fresh articles are presented in special issue edited by Ulsoy, Misawa and Utkin (2000) [52] which address important theoretical problems in variable structure systems. Topics that are covered discrete-time systems, infinite dimensional system, optimization, estimation and alternative forms of VSS and corresponding design techniques. These techniques were successfully applied in practice such as mobile robots and mechanical manipulators, automotive, aircraft, missile and chemical processes. This issue [52] is a great reference for further analysis of sliding mode control. Steady modes in relay type control systems with time-delay and periodic disturbances are considered by Fridman, E., Fridman L. and Shustin (2000) [53].

In this section, the problem of sliding mode controller design methods for both certain and uncertain multi-input systems with several fixed state delays is addressed. Two types of sliding mode controllers are proposed: 1) Simple sliding mode controller is designed for the stabilization of certain time-delay systems and 2) Combined sliding mode controller is designed for the stabilization of uncertain time-delay systems with parameter perturbations and external disturbances. Delay-independent sufficient conditions are given for the existence of a sliding mode and the robust asymptotic stability of the closed-loop systems by using Lyapunov-Krasovskii functional method combined with matrix inequality techniques. Some new matrix inequalities are evaluated for mathematical analysis of time-delay systems. Feasibility of hard solvable matrix inequalities by using modified algebraic Riccati equations is discussed.

Two numerical examples with simulation results are given to illustrate the usefulness of the proposed design methods.

4.3.3 Simple sliding mode control of certain time-delay systems

First let us consider a memoryless sliding mode control design method for the stabilization of certain multivariable time-delay system. Multi-input system with multiple state delays can be described by the following equations:

$$\dot{x}(t) = A_0 x(t) + A_1 x(t-h_1) + \ldots + A_N x(t-h_N) + Bu(t), \quad \mathrm{t} > 0 \quad x(t) = \phi(t)\,,\ -h \le t \le 0 \tag{4.3.1}$$

where $x(t) \in R^n$ is the measurable state vector, $u(t) \in R^m$ is the control input, $A_0, A_1, .., A_N$ and B are known constant matrices of appropriate dimensions, with B of full rank, $0 < h_1 < h_2 < .. < h_N < h$ are the constant time- delays, $\phi(t)$ is a continuous vector–valued initial function in $-h \le t \le 0$.

Taking known advantages of sliding mode, we want to design a simple suitable sliding mode controller for stabilization of certain time-delay system (4.3.1).

4.3.3.1 Control law and sliding conditions

To achieve this goal, we form the following type of variable structure controller:

Published by WSEAS Press
www.wseas.org
ISBN: 978-960-474-050-5
ISSN: 1790-5117

$$u(t) = -(B^T PB)^{-1} \begin{bmatrix} k_1 \|x(t)\| & \cdots & 0 \\ \vdots & & \vdots \\ 0 & \cdots & k_m \|x(t)\| \end{bmatrix} \frac{s(t)}{\|s(t)\|} \tag{4.3.2}$$

where $(B^T PB)^{-1} K$ is a feedback gain matrix, K is a diagonal design matrix with positive elements $k_1,...,k_N$ to be selected, $\|x(t)\| = \sqrt{x^T(t)x(t)}$ is the Euclidean norm, T is the transpose of vector or matrix.

In according to Young, Utkin and Özgüner (1999) [23] let us define a sliding surface as follows:

$$s(t) = B^T Px(t) \tag{4.3.3}$$

where P is a positive definite symmetric matrix to be selected. The switching gain design matrix $C = B^T P$ is a full rank and $CB = B^T PB$ is nonsingular because B has rank m and P is a symmetric positive definite matrix.Note that, $B^T PB$ is a symmetric positive definite $(m \times m)$ - matrix.

After selecting a simple sliding mode controller (4.3.2) and defining the sliding surface (4.3.3) the next step is to choose the design parameters $k_1,...,k_N$ and P such that on the sliding manifold $s(t) = 0$ can always be generated a stable sliding mode and then closed-loop time-delay system is globally asymptotically stable.

Lemma 1: Given the time-delay system (4.3.1) driven by variable structure controller (4.3.2). Then a stable sliding mode can always be generated on the sliding surface $s(t) = 0$ (4.3.3), if the following conditions are satisfied:

$$\overline{P}A_0 + A_0^T \overline{P} + (\beta_1 + \cdots + \beta_N)\overline{P} - 2k\omega\overline{P} \equiv -\overline{Q} \le 0 \tag{4.3.4}$$

$$\overline{H} = \begin{bmatrix} -\overline{Q} & \overline{P}A_1 & \cdots & \overline{P}A_N \\ A_1^T \overline{P} & -\beta_1\overline{P} & \cdots & 0 \\ \vdots & \vdots & \ddots & \vdots \\ A_N^T \overline{P} & 0 & & -\beta_N\overline{P} \end{bmatrix} \le 0 \tag{4.3.5}$$

where $\beta_1,...,\beta_N > 0$ are given constants, $\overline{P} = PBB^T P$ is a positive semi-definite $(n \times n)$ matrix and $\omega = 1\Big/\sqrt{\lambda_{\max}(\overline{P})}$.

Proof: In order to organize a full quadratic form of variables $s(t)$ and $s(\theta)$ let us define a Lyapunov-Krasovskii functional candidate as:

$$V[s(t), s(\theta)] = s^T(t)s(t) + \sum_{i=1}^{N} \beta_i \int_{t-h_i}^{t} s^T(\theta)s(\theta)d\theta \tag{4.3.6}$$

where $\beta_1,...,\beta_N > 0$ are given constants.

The time derivative of (4.3.6) along the state trajectories of system (4.3.1), (4.3.2), (4.3.3) can be calculated as follows:

$$\begin{aligned} \dot{V} &= s^T(t)\dot{s}(t) + \dot{s}^T(t)s(t) + \beta_1 s^T(t)s(t) - \beta_1 s^T(t-h_1)s(t-h_1) + ... + \beta_N s^T(t)s(t) - \beta_N s^T(t-h_N)s(t-h_N) \\ &= 2s^T(t)B^T P[A_0 x(t) + A_1 x(t-h_1) + ... + A_N x(t-h_N) + Bu(t)] + (\beta_1 + ... + \beta_N)s^T(t)s(t) \\ &\quad - \beta_1 s^T(t-h_1)s(t-h_1) - ... - \beta_N s^T(t-h_N)s(t-h_N) \\ &= x^T(t)\left[PBB^T PA_0 + A_0 PBB^T P + (\beta_1 + ... + \beta_N)PBB^T P\right]x(t) - 2s^T(t)B^T PB(B^T PB)^{-1} K\|x(t)\| \frac{s(t)}{\|s(t)\|} \end{aligned} \tag{4.3.7}$$

Published by WSEAS Press
www.wseas.org
ISBN: 978-960-474-050-5
ISSN: 1790-5117

$$+2x^T(t)PBB^TPA_1x(t-h_1)+...+2x^T(t)PBB^TPA_Nx(t-h_N)$$
$$-\beta_1x^T(t-h_1)PBB^TPx(t-h_1)-...-\beta_Nx^T(t-h_N)PBB^TPx(t-h_N)$$

where $PBB^TP=\overline{P}\geq 0$ is a positive semi-definite $(n\times n)$ matrix. Generally, $\lambda_{\min}(PBB^TP)=0$.

Since

$$\begin{aligned}&-2s^T(t)B^TPB(B^TPB)^{-1}K\|x(t)\|\frac{s(t)}{\|s(t)\|}\\&=-2\|x(t)\|\frac{s^T(t)Ks(t)}{\|s(t)\|}\leq -2k_{\min}\|x(t)\|\|s(t)\|\end{aligned}\tag{4.3.8}$$

Then in according to Shwartz inequality

$$\|s(t)\|=\|B^TPx(t)\|\leq\|B^TP\|\|x(t)\|=\sqrt{\lambda_{\max}(PBB^TP)}\|x(t)\|\tag{4.3.9}$$

or $$\|x(t)\|\geq\frac{1}{\sqrt{\lambda\max(PBB^TP)}}\|s(t)\|\tag{4.3.10}$$

Hence

$$\|x(t)\|\|s(t)\|\geq\omega\|s(t)\|\|s(t)\|=\omega\|s(t)\|^2=\omega s^T(t)s(t)\tag{4.3.11}$$

where $\omega=1\Big/\sqrt{\lambda_{\max}(PBB^TP)}$ and

$$\begin{aligned}-2k_{\min}\|x(t)\|\|s(t)\|&\leq -2k_{\min}\omega s^T(t)s(t)\\&=-2k_{\min}\omega x^T(t)PBB^TPx(t)\end{aligned}\tag{4.3.12}$$

where $k_{\min}=k$.

Therefore, (4.3.7) becomes:

$$\begin{aligned}\dot{V}&\leq x^T(t)\left[\overline{P}A_0+A_0{}^T\overline{P}+(\beta_1+...+\beta_N)\overline{P}\right]x(t)-2k\omega x^T(t)\overline{P}x(t)+2x^T(t)\overline{P}A_1x(t-h_1)+...+2x^T(t)\overline{P}A_Nx(t-h_N)\\&-\beta_1x^T(t-h_1)\overline{P}x(t-h_1)-...-\beta_Nx^T(t-h_N)\overline{P}x(t-h_N)\\&=x^T(t)\left[\overline{P}A_0+A_0{}^T\overline{P}+(\beta_1+...+\beta_N)\overline{P}-2k\omega\overline{P}\right]x(t)+2x^T(t)\overline{P}A_1x(t-h_1)+...+2x^T(t)\overline{P}A_Nx(t-h_N)\\&-\beta_1x^T(t-h_1)\overline{P}x(t-h_1)-...-\beta_Nx^T(t-h_N)\overline{P}x(t-h_N)\end{aligned}\tag{4.3.13}$$

If there exists a constant $k>0$ and a positive semi-definite symmetric matrix $\overline{P}$ such that linear for $\overline{P}$ matrix inequality (4.3.4) and condition (4.3.5) are satisfied, then rearranging (4.3.13) we obtain:

$$\begin{aligned}\dot{V}&\leq -x^T(t)\overline{Q}x(t)+2x^T(t)\overline{P}A_1x(t-h_1)+...+2x^T(t)\overline{P}A_Nx(t-h_N)-\beta_1x^T(t-h_1)\overline{P}x(t-h_1)\\&-...-\beta_Nx^T(t-h_N)\overline{P}x(t-h_N)\\&=\begin{bmatrix}x(t)\\x(t-h_1)\\\vdots\\x(t-h_N)\end{bmatrix}^T\begin{bmatrix}-\overline{Q}&\overline{P}A_1&\cdots&\overline{P}A_N\\A_1{}^T\overline{P}&-\beta_1\overline{P}&\cdots&0\\\vdots&\vdots&\ddots&\vdots\\A_N{}^T\overline{P}&0&&-\beta_N\overline{P}\end{bmatrix}\begin{bmatrix}x(t)\\x(t-h_1)\\\vdots\\x(t-h_N)\end{bmatrix}=z^T(t)\overline{H}z(t)\leq 0\end{aligned}\tag{4.3.14}$$

where $z^T(t)=\left[x^T(t)\ x^T(t-h_1)...x^T(t-h_N)\right]^{\mathrm{T}}$.

Therefore, we conclude that a stable sliding mode is generated on the switching surface $s(t)=0$ (4.3.3). Lemma 1 is proved.

We now can analyze the global asymptotic stability of time-delay system (4.3.1), (4.3.2), (4.3.3) with respect to state coordinates in large.

Published by WSEAS Press
www.wseas.org
ISBN: 978-960-474-050-5
ISSN: 1790-5117

4.3.3.2 Stabilization of closed-loop system

The following theorem summarizes our stability results.

Theorem 1: Suppose that the conditions (4.3.4) and (4.3.5) of Lemma 1 hold. Then the time-delay system (4.3.1) driven by sliding mode controller (4.3.2), (4.3.3) is globally asymptotically stable, if the following conditions are satisfied:

$$A_0^T P + PA_0 + R_1 + \ldots + R_N - 2k\omega\lambda_{\min}(B^T PB)^{-1} PBB^T P \equiv -Q < 0 \tag{4.3.15}$$

$$H = \begin{bmatrix} -Q & \mathrm{PA}_1 & \cdots & \mathrm{PA}_\mathrm{N} \\ \mathrm{A}_1{}^T P & -R_1 & \cdots & 0 \\ \vdots & \vdots & \ddots & \vdots \\ \mathrm{A}_\mathrm{N}{}^T P & 0 & & -R_N \end{bmatrix} < 0 \tag{4.3.16}$$

where P and $R_1,\ldots,R_N$ are some positive definite symmetric matrices to be selected.

Proof: Choose a Lyapunov-Krasovskii functional candidate as follows:

$$V = x^T(t)Px(t) + \sum_{i=1}^{N} \beta_i \int_{t-h_i}^{t} x^T(\theta)R_i s(\theta)d\theta \tag{4.3.17}$$

The time-derivative of (4.3.17) along the state trajectory of system (4.3.1), (4.3.2), (4.3.3) is given by

$$\begin{aligned} \dot{V} &= x^T(t)(A_0^T P + PA_0)x(t) + 2x^T(t)PA_1 x(t-h_1) + \ldots + 2x^T(t)PA_N x(t-h_N) \\ &+ x^T(t)R_1 x(t) - x^T(t-h_1)R_1 x(t-h_1) + \ldots + x^T(t)R_N x(t) - x^T(t-h_N)R_N x(t-h_N) \\ &- 2\|x(t)\| x^T(t)PB(B^T PB)^{-1} K \frac{s(t)}{\|s(t)\|} \end{aligned} \tag{4.3.18}$$

Since

$$\begin{aligned} -2\|x(t)\| x^T(t)PB(B^T PB)^{-1} K \frac{s(t)}{\|s(t)\|} &= -2\|x(t)\| \frac{s^T(t)(B^T PB)^{-1} Ks(t)}{\|s(t)\|} \\ \le -2k_{\min}\lambda_{\min}(B^T PB)^{-1}\|x(t)\| \frac{\|s(t)\|^2}{\|s(t)\|} &= -2k_{\min}\lambda_{\min}(B^T PB)^{-1}\|x(t)\|\|s(t)\| \end{aligned} \tag{4.3.19}$$

where $k_{\min} = k$ and (4.3.12) holds.

Therefore

$$\begin{aligned} \dot{V} &\le x^T(t)\left[A_0^T P + PA_0 + R_1 + \ldots + R_N - 2k\omega\lambda_{\min}(B^T PB)^{-1} PBB^T P\right]x(t) \\ &+ 2x^T(t)PA_1 x(t-h_1) + \ldots + 2x^T(t)PA_N x(t-h_N) - x^T(t-h_1)R_1 x(t-h_1) - \ldots - x^T(t-h_N)R_N x(t-h_N) \end{aligned} \tag{4.3.20}$$

If there exist a constant $k > 0$ and some positive definite symmetric matrices $P, R_1,\ldots,R_N$ such that a quadratic for P matrix inequality (4.3.15) is satisfied, then

$$\dot{V} \le \begin{bmatrix} x(t) \\ x(t-h_1) \\ x(t-h_2) \\ \vdots \\ x(t-h_N) \end{bmatrix}^T \begin{bmatrix} -Q & \mathrm{PA}_1 & \cdots & \mathrm{PA}_\mathrm{N} \\ \mathrm{A}_1{}^T P & -R_1 & \cdots & 0 \\ \vdots & \vdots & \ddots & \vdots \\ \mathrm{A}_\mathrm{N}{}^T P & 0 & & -R_N \end{bmatrix} \begin{bmatrix} x(t) \\ x(t-h_1) \\ x(t-h_2) \\ \vdots \\ x(t-h_N) \end{bmatrix} = z^T(t)Hz(t) < 0 \tag{4.3.21}$$

Published by WSEAS Press
www.wseas.org
ISBN: 978-960-474-050-5
ISSN: 1790-5117

In view of (4.3.21), if condition (4.3.16) is satisfied then (4.3.21) reduces to $\dot{V} \le 0$. Therefore, we conclude that time-delay system (4.3.1), (4.3.2), (4.3.3) is globally asymptotically stable with respect to state coordinates. The Theorem 1 is proved. Thus, design of variable structure controller for stabilization of closed-loop multivariable system with several delays is completed. Derived sliding and stability conditions are formulated in terms of some matrix inequalities. Note that linear for $\overline{P}$ matrix inequality (4.3.4) and quadratic for *P* matrix inequality (4.3.15) are similar to conventional linear and quadratic matrix equations and inequalities considered in [15], [17] and [54]-[63]. Therefore, in general a positive semi-definite solution to (4.3.4) and (4.3.15) can be calculated by using known techniques after reducing to standard quadratic Riccati equations. For example, letting $\beta_1 + \beta_2 + \ldots + \beta_N = 1$ and $2k\omega = 1$ condition (4.3.4) is reduced to standard Lyapunov matrix equation $\overline{P}A_0 + A_0\overline{P} = -\overline{Q}$. Quadratic for *P* matrix inequality (4.3.15) can be simplified as follows: Let $2k\omega\lambda_{\min}(B^T PB)^{-1} = 1$ and $R_1 + R_2 + \ldots + R_N + Q = Q_1 > 0$, then condition (4.3.15) reduces to conventional algebraic Riccati equation:

$A_0^T P + PA_0 - PBB^T P + Q_1 = 0$, then *k* can be found as:

$$k = \frac{1}{2\omega\lambda_{\min}(B^T PB)^{-1}}.$$

As pointed by Cao and Sun [59] H has its own quadratic structure $H = TMT^T$ where

$$T = \begin{bmatrix} I & -PA_1R_1^{-1} & \cdots & -PA_NR_N^{-1} \\ 0 & I & \cdots & 0 \\ \vdots & \ddots & \ddots & \vdots \\ 0 & \cdots & 0 & I \end{bmatrix}, \quad M = \begin{bmatrix} -Q & 0 & \cdots & 0 \\ 0 & -R_1 & \ddots & \vdots \\ \vdots & \ddots & \ddots & 0 \\ 0 & \cdots & 0 & -R_N \end{bmatrix}$$

Since *T* is a nonsingular and $LMI \quad M_1 < 0$, then $H < 0$. Therefore, conditions (4.3.15) and (4.3.16) are feasible.

4.3.3.3 Reduced design

Note that, the stability condition (4.3.16) can be reduced, if we assume in (4.3.17) $R_1 = R_2 = \ldots R_N = R = R^T > 0$ as in [15], [56], and then the (4.3.16) reduces to

$$H = \begin{bmatrix} -Q & \mathrm{PA}_1 & \cdots & \mathrm{PA}_\mathrm{N} \\ \mathrm{A}_1{}^T P & -R & \cdots & 0 \\ \vdots & \vdots & \ddots & \vdots \\ \mathrm{A}_\mathrm{N}{}^T P & 0 & & -R \end{bmatrix} < 0 \tag{4.3.22}$$

where

$$A_0^T P + PA_0 + NR - 2k\omega\lambda_{\min}(B^T PB)^{-1} PBB^T P \equiv -Q < 0 \tag{4.3.23}$$

Let us calculate the Schur compliments of (4.3.22):

For $N = 1$, $H_1 = \begin{bmatrix} -Q_1 & PA_1 \\ A_1^T P & -R \end{bmatrix} < 0$ (4.3.24)

where

$$A_0^T P + PA_0 + R - 2k\omega\lambda_{\min}(B^T PB)^{-1} PBB^T P \equiv -Q_1 < 0 \tag{4.3.25}$$

Then the Schur compliment for H_1

$$H_1 = -Q_1 + PA_1R^{-1}A_1^T P < 0 \tag{4.3.26}$$

Published by WSEAS Press
www.wseas.org
ISBN: 978-960-474-050-5
ISSN: 1790-5117

For $N=2$, $H_2=\begin{bmatrix}-\overline{H}_1 & PA_1\\ A_1^T P & -R\end{bmatrix}<0$ (4.3.27)

For which

$$A_0^T P+PA_0+2R-2k\omega\lambda_{\min}(B^T PB)^{-1}PBB^T P\equiv Q_2<0 \quad (4.3.28)$$

and $\overline{H}_1=-Q_2+PA_1R^{-1}A_1^T P<0$ (4.3.29)

Then the Schur compliment for H_2

$$H_2=\overline{H}_1+PA_2R^{-1}A_2^T P<0 \quad (4.3.30)$$

or $H_2=-Q_2+PA_1R^{-1}A_1^T P+PA_2R^{-1}A_2^T P<0$ (4.3.31)

and for the general case the Schur complement is given by

$$H=-Q+PA_1R^{-1}A_1^T P+\ldots+PA_NR^{-1}A_N^T P<0 \quad (4.3.32)$$

Thus, the stability conditions are reduced. A positive semi-definite solution to (4.3.32) can be determined by using known algorithms [15], [54]-[63] after reducing to standard forms.

4.3.3.4 Example 1

Let us consider a numerical example illustrating the design procedures for time-delay system (4.3.1), (4.3.2), (4.3.3) with parameters:

$$A_0=\begin{bmatrix}-1 & 0.7\\ 0.3 & 1\end{bmatrix}, A_1=\begin{bmatrix}0.1 & 0.1\\ 0 & 0.2\end{bmatrix}, A_2=\begin{bmatrix}0.2 & 0\\ 0 & 0.1\end{bmatrix}, B=\begin{bmatrix}1 & 0\\ 0 & 1\end{bmatrix}$$

$h_1=0.1$, $h_2=0.2$

The design procedure can be performed by the following steps:

- Calculate the eigenvalues of A_0:
  $\lambda_1=1.1$, $\lambda_2=-1.1$, A_0 is an unstable matrix
- Solve the quadratic for *P* matrix equation (4.3.15) or (4.3.23) by using Matlab programming:

```
A0=[-1 0.7;0.3 1];
A1=[0.1 0.1;0 0.2];
A2=[0.2 0;0 0.1];
B=[1 0;0 1];
R1=[0.1 0;0 0.1];
R2=R1
Q=[1 0;0 1];
P=[1 0.6;0.6 1]
k=2
Pline=P*B*B'*P
lambda1=min(eig(inv(B'*P*B)))
w=1/sqrt(max(eig(Pline)))
MI=A0'*P+P*A0+R1+R2-2*k*w*lambda1*Pline+Q
```


Published by WSEAS Press
www.wseas.org
ISBN: 978-960-474-050-5
ISSN: 1790-5117

```
H=[-Q P*A1 P*A2; A1'*P -R1 zeros(2:2);A2'*P zeros(2:2) -R2]
H_det=det(H)
MI_det=det(MI)
```

where

$$P=\begin{bmatrix}1 & 0.6\\ 0.6 & 1\end{bmatrix};\ B^TP=\begin{bmatrix}1 & 0.6\\ 0.6 & 1\end{bmatrix};\ B^TPB=\begin{bmatrix}1 & 0.6\\ 0.6 & 1\end{bmatrix}$$

$$(B^TPB)^{-1}=\begin{bmatrix}1.5625 & -0.9375\\ -0.9375 & 1.5625\end{bmatrix}$$

The determinant is 1.5625, and the eigenvalues are $\lambda_{\max}=2.5000$ and $\lambda_{\min}=0.6250$.

$$\overline{P}=(PBB^TP)=\begin{bmatrix}1.36 & 1.2\\ 1.2 & 1.36\end{bmatrix}$$

The determinant is 0.4096, and the eigenvalues are $\lambda_{\max}=1.56$ and $\lambda_{\min}=1.06$.

$\omega=0.625$. $\beta_1=0.2$ and $\beta_2=0.4$; $k=2$; $Q=\begin{bmatrix}1 & 0\\ 0 & 1\end{bmatrix}$.

- Check whether a solution of matrix inequality (4.3.15) hold or not:

$MI=\begin{bmatrix}-2.5650 & -0.8750\\ -0.8750 & 1.9150\end{bmatrix}$; det(MI)= -5.6776

- Check whether matrix inequality (4.3.16) negative semi-definite or not.

$$H=\begin{bmatrix}-1.0000 & 0 & 0.1000 & 0.2200 & 0.2000 & 0.0600\\ 0 & -1.0000 & 0.0600 & 0.2600 & 0.1200 & 0.1000\\ 0.1000 & 0.0600 & -0.1000 & 0 & 0 & 0\\ 0.2200 & 0.2600 & 0 & -0.1000 & 0 & 0\\ 0.2000 & 0.1200 & 0 & 0 & -0.1000 & 0\\ 0.0600 & 0.1000 & 0 & 0 & 0 & -0.1000\end{bmatrix}$$

The determinant is -8.6950e-005. Therefore, the matrix inequality (4.3.16) is feasible.

Therefore, designed time-delay system is globally asymptotically stable.

Certain time delay system (4.3.1), (4.3.2), (4.3.3) are simulated by using MATLAB-Simulink. Block diagram is shown in Figure 1. Fragments of simulation results are presented in Fig.2, 3 and 4. As seen from these figures, the time responses are stabilized rapidly with minor steady-state errors. Control efforts have some chattering.

4.3.4 Sliding Mode Control of Uncertain Time-Delay Systems with Parameter Perturbations and External Disturbances

Now, advanced design results presented in section 4.3.2 can be generalized to design of sliding mode controller for robust stabilization of uncertain multiple state delay systems with parameter perturbations and external disturbances.

The uncertain time-delay system can be described by the following state-space equation:

$$\dot{x}(t)=(A_0+\Delta A_0)x(t)+(A_1+\Delta A_1)x(t-h_1)+\ldots+(A_N+\Delta A_N)x(t-h_N)+Bu(t)+Df(t),\ \mathrm{t}>0$$

$$x(t)=\phi(t),\ -h\le t\le 0 \tag{4.3.33}$$

where in addition to (4.3.1), $\Delta A_0,\Delta A_1,\ldots,\Delta A_N$ are the parameter uncertainties, D is a known ($n\times n$)-matrix, $f(t)$ is an external disturbances.

Published by WSEAS Press
www.wseas.org
ISBN: 978-960-474-050-5
ISSN: 1790-5117

The following assumptions underline our design approach:

Assumption 1: There exist some bounded matrices $E_0(\sigma), E_1(\sigma), \ldots, E_N(\sigma)$, such that

$$\begin{aligned} &\Delta A_0(\sigma) = BE_0(\sigma) \\ &\Delta A_1(\sigma) = BE_1(\sigma) \\ &\vdots \\ &\Delta A_N(\sigma) = BE_N(\sigma) \end{aligned} \tag{4.3.34}$$

If parameter perturbations are not matched, then we assume that they are norm-bounded

$$\begin{aligned} &\max_{\sigma} \|\Delta A_0(\sigma)\| \le \alpha_0 \\ &\max_{\sigma} \|\Delta A_1(\sigma)\| \le \alpha_1 \\ &\vdots \\ &\max_{\sigma} \|\Delta A_N(\sigma)\| \le \alpha_N \end{aligned} \tag{4.3.35}$$

where $\alpha_1, \ldots \alpha_n$ are given positive scalars.

Assumption 2: There exists a matrix E such that

$$D = BE \tag{4.3.36}$$

with $\|D\| = \alpha$ (4.3.37)

and an external disturbance is norm-bounded

$$\|f(t)\| \le f_0 \tag{4.3.38}$$

where f_0 is a given positive scalar.

The control goal is to design a combined variable structure controller for robust stabilization of time delay system (4.3.33) with parameter perturbation and external disturbances.

4.3.4.1 Sliding surface and motion

It is clear that the simple sliding mode controller (4.3.2), (4.3.3) is not sufficient for stabilization of extended time-delay system (4.3.33). We need for example to introduce an equivalent control term for cancellation of nominal regime of uncertain time-delay system (4.3.33). For this reason we must determine an equivalent control term for time-delay system (4.3.33) and then a sliding mode which can be arisen on the sliding manifold $s(t) = 0$ (4.3.3). First, according to equivalent control method [1], from the following equations:

$$\begin{aligned} &\dot{s}(t) = B^T P\dot{x}(t) = B^T P(A_0 + \Delta A_0)x(t) + B^T P(A_1 + \Delta A_1) \\ &+ \ldots + B^T P(A_N + \Delta A_N) + B^T PBu(t) + B^T PDf(t) = 0 \end{aligned} \tag{4.3.39}$$

we determine a full equivalent control for the uncertain time-delay system with matched uncertainties and external disturbance (4.3.33):

$$\begin{aligned} &u(t) \equiv u_{eq}(t) = -(B^T PB)^{-1}\left[B^T PA_0 x(t) + B^T PA_1 x(t-h_1) + \ldots + B^T PA_N x(t-h_N)\right] \\ &-(B^T PB)^{-1}\left[B^T P\Delta A_0 x(t) + B^T P\Delta A_1 x(t-h_1) + \ldots + B^T P\Delta A_N x(t-h_N)\right] - (B^T PB)^{-1} B^T PDf(t) \end{aligned} \tag{4.3.40}$$

Note that, the second and the third parts of (4.3.40) are unavailable because of parameter uncertainties and unknown external disturbances. But, further we will use only the first available part of equivalent control (4.3.40). Therefore, similar to [5], [27] and [30], substituting (4.3.40) into (4.3.33) we have

$$\begin{aligned} &\dot{x}(t) = \left[A_0 - B(B^T PB)^{-1} B^T PA_0\right]x(t) + \left[A_1 - B(B^T PB)^{-1} B^T PA_1\right]x(t-h_1) \\ &+ \ldots + \left[A_N - B(B^T PB)^{-1} B^T PA_N\right]x(t-h_N) + \left[\Delta A_0 - B(B^T PB)^{-1} B^T PBE_0(\sigma)\right]x(t) \\ &+ \left[\Delta A_1 - B(B^T PB)^{-1} B^T PBE_1(\sigma)\right]x(t-h_1) + \ldots + \left[\Delta A_N - B(B^T PB)^{-1} B^T PBE_N(\sigma)\right]x(t-h_N) \\ &+ \left[D - B(B^T PB)^{-1} B^T PBE\right]f(t) \end{aligned} \tag{4.3.41}$$

If matching conditions (4.3.34), (4.3.36) are satisfied, then

$$\begin{aligned} &\Delta A_0 - B(B^T PB)^{-1} B^T P\Delta A_0 = BE_0 - B(B^T PB)^{-1} B^T PBE_0 = 0 \\ &\Delta A_1 - B(B^T PB)^{-1} B^T P\Delta A_1 = BE_1 - B(B^T PB)^{-1} B^T PBE_1 = 0 \\ &\vdots \end{aligned} \tag{4.3.42}$$

Published by WSEAS Press
www.wseas.org
ISBN: 978-960-474-050-5
ISSN: 1790-5117

$$\Delta A_N - B(B^T PB)^{-1} B^T P\Delta A_N = BE_N - B(B^T PB)^{-1} B^T PBE_N = 0$$
$$D - B(B^T PB)^{-1} B^T PD = BE - B(B^T PB)^{-1} B^T PBE = 0$$
and from (4.3.41) we have a sliding time-delay motion as follows
$$\dot{x}(t) = \overline{A}_0 x(t) + \overline{A}_1 x(t-h_1) + \ldots + \overline{A}_N x(t-h_N) \tag{4.3.43}$$
where
$$(B^T PB)^{-1} B^T P = G,\ A_0 - BGA_0 = \overline{A}_0,\ A_1 - BGA_1 = \overline{A}_1 \ldots A_N - BGA_N = \overline{A}_N \tag{4.3.44}$$

An equivalent control gain matrix G can be selected such that $\overline{A}_0,\ \overline{A}_1, \ldots, \overline{A}_N$ are stable, but this is not necessary for the stability of sliding time-delay system (4.3.43). Stability analysis of (4.3.43) is given by the following lemma, which is similar to [15].

Lemma 2: Suppose that Assumptions 1 and 2 hold. Then, time-delay sliding motion (4.3.43) is asymptotically stable, if the following matrix inequalities are satisfied:
$$\overline{A}_0^T P + P\overline{A}_0 + R_1 + \ldots R_N \equiv -Q < 0 \tag{4.3.45}$$
$$H = \begin{bmatrix} -Q & \mathrm{P}\overline{\mathrm{A}}_1 & \cdots & \mathrm{P}\overline{\mathrm{A}}_\mathrm{N} \\ \overline{\mathrm{A}}_1{}^T P & -R_1 & \cdots & 0 \\ \vdots & \vdots & \ddots & \vdots \\ \overline{\mathrm{A}}_\mathrm{N}{}^T P & 0 & \ldots & -R_N \end{bmatrix} < 0 \tag{4.3.46}$$
where $P, Q, R_1, \ldots R_N$ are some positive-definite symmetric matrices to be selected. Note that equation (4.3.45) is a standard Lyapunov matrix equation. Matrix inequality (4.3.46) after reducing to LMI's form can be solved by using known techniques, for example given by [17], [54], [61]-[63] etc.

Proof: Choose a Lyapunov-Krasovskii functional candidate as follows
$$V = x^T(t)Px(t) + \sum_{i=1}^{N} \int_{t-h_i}^{t} x^T(\theta) R_i x(\theta) d\theta \tag{4.3.47}$$
The time-derivative of (4.3.47) along the state trajectory of (4.3.43) is given by
$$\dot{V} = x^T(t)\left[\overline{A}_0^T P + P\overline{A}_0 + R_1 + \ldots R_N\right] x(t) + 2x^T(t)P\overline{A}_1 x(t-h_1) + \ldots + 2x^T(t)P\overline{A}_N x(t-h_N)$$
$$-x^T(t-h_1)R_1 x(t-h_1) - \ldots - x^T(t-h_N)R_N x(t-h_N)$$
$$= \begin{bmatrix} x(t) \\ x(t-h_1) \\ \vdots \\ x(t-h_N) \end{bmatrix}^T \begin{bmatrix} -Q & \mathrm{P}\overline{\mathrm{A}}_1 & \cdots & \mathrm{P}\overline{\mathrm{A}}_\mathrm{N} \\ \overline{\mathrm{A}}_1{}^T P & -R_1 & \cdots & 0 \\ \vdots & \vdots & \ddots & \vdots \\ \overline{\mathrm{A}}_\mathrm{N}{}^T P & 0 & \ldots & -R_N \end{bmatrix} \begin{bmatrix} x(t) \\ x(t-h_1) \\ \vdots \\ x(t-h_N) \end{bmatrix} = z^T(t) H\, z(t) < 0 \tag{4.3.48}$$
where $z^T(t) = \left[x^T(t) x^T(t-h_1) \ldots x^T(t-h_N)\right]^\mathrm{T}$.

In view of (4.3.48) when condition (4.3.46) is satisfied, then (4.3.48) reduces to $\dot{V} < 0$. Therefore, sliding time-delay system (4.3.43) is asymptotically stable.

4.3.4.2. Combined variable structure controller and sliding conditions

For the robust stabilization of uncertain time-delay system (4.3.33) with unmatched uncertainties and external disturbances we form the following combined variable structure controller:
$$u(t) = u_{eq}(t) - (B^T PB)^{-1} \begin{bmatrix} k_1 \|x(t)\| & \cdots & 0 \\ \vdots & \ddots & \vdots \\ 0 & \ldots & k_m \|x(t)\| \end{bmatrix} \frac{s(t)}{\|s(t)\|} - (B^T PB)^{-1} \delta \frac{s(t)}{\|s(t)\|} \tag{4.3.49}$$
where
$$u_{eq}(t) = -(B^T PB)^{-1}\left[B^T PA_0 x(t) + B^T PA_1 x(t-h) + \ldots + B^T PA_N x(t-h_N)\right] \tag{4.3.50}$$
is an available equivalent control term, $k_1, \ldots, k_m$ and δ are the scalar gain parameters to be selected, $(B^T PB)^{-1} K$ is a feedback gain matrix, $(B^T PB)^{-1}\delta$ is a relay gain matrix.

Published by WSEAS Press
www.wseas.org
ISBN: 978-960-474-050-5
ISSN: 1790-5117

Note that, constructed sliding mode controller consists of three terms:
1) Available equivalent control term for the stabilization of nominal time-delay system.
2) Variable structure control term for the compensation of parameter uncertainties.
3) Min-max (relay) term for the rejection of external disturbances and together with second term to ensure reaching conditions. Structure of these control terms is typical and very simple in their practical implementation. The design parameters of the combined controller (4.3.49) with switching functions (4.3.3) can be selected from the sliding conditions and stability analysis.

Lemma 3: Suppose that conditions (4.3.35) and (4.3.37) hold. Then a robustly stable sliding mode can always be generated, on the sliding manifold $s(t)=0$ (4.3.3) defined for the multivariable time-delay systems (4.3.33) with unmatched parameter uncertainties and external disturbances driven by controller (4.3.49), if the following matrix inequalities are satisfied:

$$2\alpha_0\lambda_{\max}(\overline{\mathrm{P}})I_n+\alpha_1\lambda_{\max}(\overline{\mathrm{P}})I_n+\ldots+\alpha_N\lambda_{\max}(\overline{\mathrm{P}})I_n+(\beta_1+\ldots+\beta_N)\overline{P}-2k\omega\overline{P}\equiv-\overline{Q}\le 0 \tag{4.3.51}$$

and,

$$\alpha_1\,\lambda_{\max}(\overline{P})I_n-\beta_1\overline{P}\le 0,\ldots,\alpha_N\,\lambda_{\max}(\overline{P})I_n-\beta_N\overline{P}\le 0 \tag{4.3.52}$$

$$\overline{H}=\begin{bmatrix}-\overline{Q} & 0 & \ldots & 0\\ 0 & \alpha_1\lambda_{\max}(\overline{P})I_n-\beta_1\overline{P} & \ldots & 0\\ \vdots & \vdots & \vdots & \vdots\\ 0 & 0 & \ldots & \alpha_N\lambda_{\max}(\overline{P})I_n-\beta_N\overline{P}\end{bmatrix}\le 0 \tag{4.3.53}$$

$$\delta\ge df_o\lambda_{\max}(\overline{P}) \tag{4.3.54}$$

where, $\beta_1,\ldots,\beta_N>0$ are given constants, $\overline{P}=PBB^TP$ is a positive semi-definite symmetric matrix. Note that matrix inequalities (4.3.51) and (4.3.54) are feasible.

Proof : Let us choose a Lyapunov-Krasovskii functional candidate as:

$$V=s^T(t)s(t)+\sum_{i=1}^{N}\beta_i\int_{t-h_i}^{t}s^T(\theta)s(\theta)d\theta \tag{4.3.55}$$

The time-derivative of (4.3.55) along the state trajectories of time-delay system (4.3.33), (4.3.49) can be calculated as follows:

$$\begin{aligned}
&\dot{V}\left[s(t),s(\theta)\right]=s^T(t)\dot{s}(t)+\dot{s}^T(t)s(t)+\beta_1s^T(t)s(t)-\beta_1s^T(t-h_1)s(t-h_1)+\ldots+\beta_Ns^T(t)s(t)-\beta_Ns^T(t-h_N)s(t-h_N)\\
&=2s^T(t)B^TP\begin{bmatrix}A_0x(t)+A_1x(t-h_1)+\ldots+A_Nx(t-h_N)+\Delta A_0x(t)+\Delta A_1x(t-h_1)\\+\ldots+\Delta A_Nx(t-h_N)+Bu(t)+Df(t)\end{bmatrix}+(\beta_1+\ldots+\beta_N)s^T(t)s(t)\\
&-\beta_1s^T(t-h_1)s(t-h_1)-\ldots-\beta_Ns^T(t-h_N)s(t-h_N)\\
&=2x^T(t)PB\Big[B^TPA_0x(t)+B^TPA_1x(t-h_1)+\ldots+B^TPA_Nx(t-h_N)+B^TP\Delta A_0x(t)\\
&+B^TP\Delta A_1x(t-h_1)+\ldots+B^TP\Delta A_Nx(t-h_N)-B^TPB(B^TPB)^{-1}B^TPA_0x(t)\\
&-B^TPB(B^TPB)^{-1}B^TPA_1x(t-h_1)+B^TP\Delta A_0x(t)+B^TP\Delta A_1x(t-h_1)\\
&+\ldots+\Delta B^TPA_Nx(t-h_N)+B^TPDf(t)+(\beta_1+\ldots+\beta_N)x^T(t)PBB^TPx(t)\\
&-\beta_1x^T(t-h_1)s(t-h_1)-\ldots-\beta_Nx^T(t-h_N)PBB^TPx(t-h_N)\\
&-B^TPB(B^TPB)^{-1}K\|x(t)\|\frac{s(t)}{\|s(t)\|}-B^TPB(B^TPB)^{-1}\delta\frac{s(t)}{\|s(t)\|}+B^TPDf(t)\Big]\\
&+(\beta_1+\ldots+\beta_N)x^T(t)PBB^TPx(t)-\beta_1x^T(t-h_1)PBB^TPx(t-h_1)-\ldots-\beta_Nx^T(t-h_N)PBB^TPx(t-h_N)\\
&=2x^T(t)\left[\overline{P}\Delta A_0+(\beta_1+\ldots+\beta_N)\overline{P}\right]x(t)+2x^T(t)\overline{P}\Delta A_1x(t-h_1)+\ldots+2x^T(t)\overline{P}\Delta A_Nx(t-h_N)-2\|x(t)\|\frac{s^T(t)Ks(t)}{\|s(t)\|}-2\delta\frac{s^T(t)s(t)}{\|s(t)\|}\\
&+2s^T(t)B^TPDf(t)-\beta_1x^T(t-h_1)\overline{P}x(t-h_1)-\ldots-\beta_Nx^T(t-h_N)\overline{P}x(t-h_N)
\end{aligned}$$

Published by WSEAS Press
www.wseas.org
ISBN: 978-960-474-050-5
ISSN: 1790-5117

$$
\begin{aligned}
&\le 2\alpha_0\lambda_{\max}(\overline{P})\|x(t)\|^2 + 2x^T(t)(\beta_1+\ldots+\beta_N)\overline{P}x(t) + 2\alpha_1\lambda_{\max}(\overline{P})\|x(t)\|\|x(t-h_1)\| \\
&+\ldots+2\alpha_N\lambda_{\max}(\overline{P})\|x(t)\|\|x(t-h_N)\| - 2k_{\min}\|x(t)\|\|s(t)\| - 2\delta\|s(t)\| + 2df_0\lambda_{\max}(\overline{P}) \\
&-\beta_1 x^T(t-h_1)\overline{P}x(t-h_1) - \ldots - \beta_N x^T(t-h_N)\overline{P}x(t-h_N) \\
&= x^T(t)\left[2\alpha_0\lambda_{\max}(\overline{P})I_n + 2(\beta_1+\ldots+\beta_N)\overline{P} - 2k_{\min}\omega\overline{P}\right]x(t) \\
&+2\alpha_1\lambda_{\max}(\overline{P})\|x(t)\|\|x(t-h_1)\| + \ldots + 2\alpha_N\lambda_{\max}(\overline{P})\|x(t)\|\|x(t-h_N)\| \\
&+2\left[df_0\lambda_{\max}(\overline{P}) - \delta\right]\|s(t)\| - \beta_1 x^T(t-h_1)\overline{P}x(t-h_1) - \ldots - \beta_N x^T(t-h_N)\overline{P}x(t-h_N)
\end{aligned}
\tag{4.3.56}
$$

Since, $2ab \le a^2 + b^2$ where a and b are some scalars, then

$$
\begin{aligned}
&2\alpha_1\lambda_{\max}(\overline{P})\|x(t)\|\|x(t-h_1)\| \le \alpha_1\lambda_{\max}(\overline{P})\left[x^T(t)x(t) + x^T(t-h_1)x(t-h_1)\right] \\
&\vdots \\
&2\alpha_N\lambda_{\max}(\overline{P})\|x(t)\|\|x(t-h_N)\| \le \alpha_N\lambda_{\max}(\overline{P})\left[x^T(t)x(t) + x^T(t-h_N)x(t-h_N)\right]
\end{aligned}
\tag{4.3.57}
$$

Therefore, (4.3.56) becomes

$$
\begin{aligned}
&\dot{V} \le x^T(t)\left[2\alpha_0\lambda_{\max}(\overline{P})I_n + (\beta_1+\ldots+\beta_N)\overline{P} - 2k_{\min}\omega\overline{P} + \alpha_1\lambda_{\max}(\overline{P})I_n + \ldots + \alpha_N\lambda_{\max}(\overline{P})I_n\right]x(t) \\
&+x^T(t-h_1)\left[\ (\alpha_1\lambda_{\max}(\overline{P})I_n - \beta_1\overline{P})\ \right]x(t-h_1) + \ldots + x^T(t-h_N)(\alpha_N\lambda_{\max}(\overline{P})I_n - \beta_N\overline{P})x(t-h_N) \\
&-2\left[\delta - df_0\lambda_{\max}(\overline{P})\right]\|s(t)\|
\end{aligned}
\tag{4.3.58}
$$

If simple linear for $\overline{P}$ matrix inequalities (4.3.51) and (4.3.52) are satisfied, then rearranging (4.3.58) we have

$$
\begin{aligned}
&\dot{V} \le \begin{bmatrix} x(t) \\ x(t-h_1) \\ \vdots \\ x(t-h_N) \end{bmatrix}^T \begin{bmatrix} -\bar{Q} & 0 & \ldots & 0 \\ 0 & \alpha_1\lambda_{\max}(\overline{P})I_n - \beta_1\overline{P} & \ldots & 0 \\ \vdots & \vdots & \vdots & \vdots \\ 0 & 0 & \ldots & \alpha_N\lambda_{\max}(\overline{P})I_n - \beta_N\overline{P} \end{bmatrix} \begin{bmatrix} x(t) \\ x(t-h_1) \\ \vdots \\ x(t-h_N) \end{bmatrix} \\
&-2\left[\delta - df_0\lambda_{\max}(\overline{P})\right]\|s(t)\| \\
&= z^T\overline{H}z(t) - 2\left[\delta - df_0\lambda_{\max}(\overline{P})\right]\|s(t)\| \le -2\left[\delta - df_0\lambda_{\max}(\overline{P})\right]\|s(t)\| < 0
\end{aligned}
\tag{4.3.59}
$$

Therefore, Lemma 3 is proved.

4.3.4.3 Robust stabilization of closed-loop system

The final step is to determine the control design parameters such that the uncertain time-delay system (4.3.33), (4.3.49), and (4.3.3) with unmatched parameter uncertainties and matched external disturbances are globally asymptotically stable with respect to state coordinates.

Theorem 2: Suppose that Assumption 1 (4.3.35) and 2, Lemma 2 and 3 are met. Then the uncertain multivariable time-delay system (4.3.33) with unmatched parameter perturbations and matched external disturbances driven by combined controller (4.3.49) is robustly globally asymptotically stable with respect to the state variables, if the following conditions are satisfied:

$$\alpha_1\lambda_{\max}(\mathrm{P})I_n - R_1 < 0, \ldots, \alpha_N\lambda_{\max}(\mathrm{P})I_n - R_N < 0 \tag{4.3.60}$$

$$
\begin{aligned}
&\overline{A}_0^T P + P\overline{A}_0 + R_1 + \ldots R_N + 2\alpha_0\lambda_{\max}(P)\ I_n + \alpha_1\lambda_{\max}(P)\ I_n + \cdots + \alpha_N\lambda_{\max}(P)\ I_n \\
&-2k\omega\lambda_{\min}(B^T PB)^{-1}PBB^T P \equiv -Q < 0
\end{aligned}
\tag{4.3.61}
$$

$$
H = \begin{bmatrix} -Q & 0 & \ldots & 0 \\ 0 & \alpha_1\lambda_{\max}(P)I_n - R_1 & \ldots & 0 \\ \vdots & \vdots & \vdots & \vdots \\ 0 & 0 & \ldots & \alpha_N\lambda_{\max}(P)I_n - R_N \end{bmatrix} < 0 \tag{4.3.62}
$$

$$\delta\lambda_{\min}(B^T PB)^{-1} = ef_0 \tag{4.3.63}$$

where $P, R_1, \ldots R_N$ are some positive definite symmetric matrices. Note that, conditions (4.3.61) and (4.3.62) are simple matrix inequalities, which are feasible. However condition (4.3.60) after reducing to standard form can be solved by algebraic Riccati equations techniques.

Proof: Choose a Lyapunov-Krasovskii functional candidate as follows:

Published by WSEAS Press
www.wseas.org
ISBN: 978-960-474-050-5
ISSN: 1790-5117

$$V\left[x(t),\, x(\theta)\right] = x^T(t)Px(t) + \sum_{i=1}^{N} \int_{t-h_i}^{t} x^T(\theta)R_i x(\theta)\,d\theta \tag{4.3.64}$$

The time-derivative of (4.3.64) along the state trajectories of time-delay system (4.3.33), (4.3.49), (4.3.3) can be calculated as follows:

$$\begin{aligned}
\dot{V} &= 2x^T(t)P\left[A_0x(t) + A_1x(t-h_1) + \ldots + A_Nx(t-h_N) + \Delta A_0x(t) + \Delta A_1x(t-h_1) + \ldots + \Delta A_Nx(t-h_N) + Bu(t) + Df(t)\right] \\
&+ x^T(t)R_1x(t) - x^T(t-h_1)R_1x(t-h_1) + \ldots + x^T(t)R_Nx(t) - x^T(t-h_N)R_Nx(t-h_N) \\
&= 2x^T(t)\left[PA_0x(t) + PA_1x(t-h_1) + \ldots + PA_Nx(t-h_N) + P\Delta A_0x(t) + P\Delta A_1x(t-h_1)\right. \\
&+ \ldots + P\Delta A_Nx(t-h_N) - PB(B^TPB)^{-1}B^TPA_0x(t) - PB(B^TPB)^{-1}B^TPA_1x(t-h_1) \\
&\left.- \ldots - PB(B^TPB)^{-1}B^TPA_Nx(t-h_N) - PB(B^TPB)^{-1}K\|x(t)\|\frac{s(t)}{\|s(t)\|} - PB(B^TPB)^{-1}\delta\frac{s(t)}{\|s(t)\|} + PDf(t)\right] \\
&+ x^T(t)(R_1 + \ldots + R_N)x(t) - x^T(t-h_1)R_1x(t-h_1) - \ldots - x^T(t-h_N)R_Nx(t-h_N) \\
&= 2x^T(t)P\overline{A}_0x(t) + 2x^T(t)P\overline{A}_1x(t-h_1) + \ldots + 2x^T(t)P\overline{A}_Nx(t-h_N) + 2x^T(t)P\Delta A_0x(t) \\
&+ 2x^T(t)P\Delta A_1x(t-h_1) + \ldots + 2x^T(t)P\Delta A_Nx(t-h_N) - 2\|x(t)\|\frac{s(t)(B^TPB)^{-1}Ks(t)}{\|s(t)\|} - 2\delta\frac{s(t)(B^TPB)^{-1}s(t)}{\|s(t)\|} \\
&+ 2x^T(t)PDf(t) + x^T(t)(R_1 + \ldots + R_N)x(t) - x^T(t-h_1)R_1x(t-h_1) - \ldots - x^T(t-h_N)R_Nx(t-h_N)
\end{aligned} \tag{4.3.65}$$

where $\overline{A}_0, \overline{A}_{1,\ldots}, \overline{A}_N$ are defined by (44) for example $\overline{A}_0 = A_0 - B(B^TPB)^{-1}B^TPA_0$.

Using evaluation techniques improved in sections 4.3.2.2 and 4.3.3.2, (4.3.65) can be evaluated as follows:

$$\begin{aligned}
\dot{V} &\le x^T(t)\left[\overline{A}_0^TP + P\overline{A}_0 + R_1 + \ldots + R_N - 2k_{\min}\omega\lambda_{\min}(B^TPB)^{-1}PBB^TP\right]x(t) \\
&+ 2\alpha_1\lambda_{\max}(P)\,\|x(t)\|\|x(t-h_1)\| + \ldots + 2\alpha_N\lambda_{\max}(P)\,\|x(t)\|\|x(t-h_N)\| \\
&- 2\delta\lambda_{\min}(B^TPB)^{-1}\|s(t)\| + 2ef_0\|s(t)\| - x^T(t-h_1)R_1x(t-h_1) - \ldots - x^T(t-h_1)R_Nx(t-h_N) \\
&\le x^T(t)\left[\overline{A}_0^TP + P\overline{A}_0 + R_1 + \ldots + R_N + 2\alpha_0\lambda_{\max}(P)I_n - 2k_{\min}\omega\lambda_{\min}(B^TPB)^{-1}PBB^TP\right]x(t) \\
&+ \alpha_1\lambda_{\max}(P)x^T(t)x(t) + \ldots + \alpha_N\lambda_{\max}(P)x^T(t)x(t) + \alpha_1\lambda_{\max}(P)x^T(t-h_1)x(t-h_1) \\
&+ \ldots + \alpha_N\lambda_{\max}(P)x^T(t-h_N)x(t-h_N) - x^T(t-h_1)R_1x(t-h_1) - \ldots - x^T(t-h_1)R_Nx(t-h_N) \\
&- 2\left[\delta\lambda_{\min}(B^TPB)^{-1} - ef_0\right]\|s(t)\|
\end{aligned} \tag{4.3.66}$$

If, quadratic for P matrix inequality (4.3.61) and conditions (4.3.62) and (4.3.63) are satisfied, then rearranging (4.3.66) we obtain:

$$\dot{V} \le \begin{bmatrix} x(t) \\ x(t-h_1) \\ \vdots \\ x(t-h_N) \end{bmatrix}^T \begin{bmatrix} -Q & 0 & \ldots & 0 \\ 0 & \alpha_1\lambda_{\max}(P)I_n - R_1 & \ldots & 0 \\ \vdots & \vdots & \vdots & \vdots \\ 0 & 0 & \ldots & \alpha_N\lambda_{\max}(P)I_n - R_N \end{bmatrix} \begin{bmatrix} x(t) \\ x(t-h_1) \\ \vdots \\ x(t-h_N) \end{bmatrix} = z^T(t)Hz(t) < 0 \tag{4.3.67}$$

where $z^T(t) = \left[x^T(t)\; x^T(t-h_1) \ldots x^T(t-h_N)\right]^{\mathrm{T}}$.

Therefore, time-delay system (4.3.33), (4.3.49), (4.3.3) is robustly globally asymptotically stable. Theorem 2 is proved.

4.3.4.4 Example 2

Consider time-delay system (4.3.33), (4.3.49), (4.3.3) with the nominal parameters given in design example 1 and by the following parameter perturbations:

$$\Delta A_0 = \begin{bmatrix} 0.2\sin(t) & 0 \\ 0 & 0.1\sin(t) \end{bmatrix}, \Delta A_1 = \begin{bmatrix} 0.1\cos(t) & 0 \\ 0 & 0.2\cos(t) \end{bmatrix},$$

$$\Delta A_2 = \begin{bmatrix} 0.2\cos(t) & 0 \\ 0 & 0.1\cos(t) \end{bmatrix}.$$

Published by WSEAS Press
www.wseas.org
ISBN: 978-960-474-050-5
ISSN: 1790-5117

Matching condition for external disturbances is given by:

$$D = \mathrm{B}\,E = \begin{bmatrix} 1 & 0 \\ 0 & 1 \end{bmatrix} \begin{bmatrix} 0.2\cos \mathrm{t} & 0 \\ 0 & 0.2 \end{bmatrix}$$

$$= \begin{bmatrix} 0.2\cos \mathrm{t} & 0 \\ 0 & 0.2 \end{bmatrix};\ f(t) = \begin{bmatrix} 0.2\sin t \\ 0.2 \end{bmatrix}$$

Design procedures can be fulfilled by the following steps:

- Solve the matrix inequalities (4.3.60)-(4.3.62) by using Matlab programming:

```
clear
clc
A0=[-1 0.7;0.3 1];
A1=[0.1 0.1;0 0.2];
A2=[0.2 0;0 0.1];
B=[1 0;0 1];
R1=[1 0;0 1];
R2=R1;
Q=[1 0;0 1];
P=[1 0.6;0.6 1];
Pline=P*B*B'*P;
lambdamax_Pline=max(eig(Pline));
lambda1=min(eig(inv(B'*P*B)));
w=1/sqrt(max(eig(Pline)));
d=norm([0.2 0;0 0.2]);
f0=norm([0.2;0.2]);
In=Q;
k1=2;
alfa0=max(eig([0.2 0;0 0.1]))
alfa1=max(eig([0.1 0;0 0.2]))
alfa2=max(eig([0.2 0;0 0.1]))
lambdamax_P=max(eig(P))
A0line=A0-B*inv(B'*P*B)*B'*P
MI1=A0line'*P+P*A0line+R1+R2
+2*alfa0*lambdamax_P*In+alfa1*lambdamax_P*In
+alfa2*lambdamax_P*In-2*k1*w*lambda1*Pline+Q
MI1_det=det(MI1)
det(-alfa1*lambdamax_P*In+R1)
det(-alfa2*lambdamax_P*In+R2)
H2=[Q zeros(2:2) zeros(2:2);
 zeros(2:2) -alfa1*lambdamax_P*In+R1 zeros(2:2);
 zeros(2:2) zeros(2:2) -alfa2*lambdamax_P*In+R2 ]
H2_det=det(H2)
H1=-H2
delta=d*f0*lambdamax_Pline
```

where

$\alpha_0 = 0.2;\ \alpha_1 = 0.2;\ \ \alpha_2 = 0.2$

$\omega = 0.6250$

$$Q = I_n = R_1 = R_2 = \begin{bmatrix} 1 & 0 \\ 0 & 1 \end{bmatrix};\ k = 2$$

$$P = \begin{bmatrix} 1.0000 & 0.6000 \\ 0.6000 & 1.0000 \end{bmatrix};\ \overline{P} = \begin{bmatrix} 1.3600 & 1.2000 \\ 1.2000 & 1.3600 \end{bmatrix}$$

$$MI = \begin{bmatrix} -1.6400 & -0.2000 \\ -0.2000 & 2.8400 \end{bmatrix};\ \mathrm{det(MI)} = -4.6976$$

$\lambda_{\max}(P) = 1.600\,;\ \lambda_{\max}(\overline{P}) = 2.5600$

$$R_1 - \alpha_1 \lambda_{\max}(P) I_n = \begin{bmatrix} 0.6800 & 0 \\ 0 & 0.6800 \end{bmatrix}$$

Published by WSEAS Press
www.wseas.org
ISBN: 978-960-474-050-5
ISSN: 1790-5117

$$R_2 - \alpha_2 \lambda_{\max}(P) I_n = \begin{bmatrix} 0.6800 & 0 \\ 0 & 0.6800 \end{bmatrix}$$

$$-H = -\begin{bmatrix} 1.0000 & 0 & 0 & 0 & 0 & 0 \\ 0 & 1.0000 & 0 & 0 & 0 & 0 \\ 0 & 0 & 0.6800 & 0 & 0 & 0 \\ 0 & 0 & 0 & 0.6800 & 0 & 0 \\ 0 & 0 & 0 & 0 & 0.6800 & 0 \\ 0 & 0 & 0 & 0 & 0 & 0.6800 \end{bmatrix} < 0$$

det(H)= 0.2138

$d = \max\|D\| = 0.2$; $f_0 = \max\|f(t)\| = 0.2828$; $\lambda_{\max}(\overline{P}) = 2.56$

$\delta = 0.1448$

Notice that the conditions (4.3.60)-(4.3.63) hold and we have designed all the parameters of the combined sliding mode controller.

The uncertain time-delay system (4.3.33), (4.3.49) and (4.3.3) with given parameters are simulated by using MATLAB-SIMULINK. Block diagram is shown in Fig.5. Simulation results are given in Fig.6-8. As seen from these figures, system time responses are stabilized satisfactorily with some oscillations and minor steady state errors. Design example shows the usefulness of the proposed design approaches.

4.3.5 Conclusion

The problem of sliding mode controller design methods for both certain and uncertain multi-input systems with several fixed state delays is addressed. Two types of sliding mode controllers are proposed: 1) Simple sliding mode controller is designed for the stabilization of certain time-delay systems and 2) Combined sliding mode controller is designed for the stabilization of uncertain time-delay systems with parameter perturbations and external disturbances. Delay-independent sufficient conditions are given for the existence of a sliding mode and the robust asymptotic stability of the closed-loop systems by using Lyapunov-Krasovskii functional method combined with matrix inequality techniques. Some new matrix inequalities are evaluated for mathematical analysis of time-delay systems. Feasibility of hard solvable matrix inequalities by using modified algebraic Riccati equations is discussed.

Two numerical examples with simulation results are given to illustrate the usefulness of the proposed design methods.

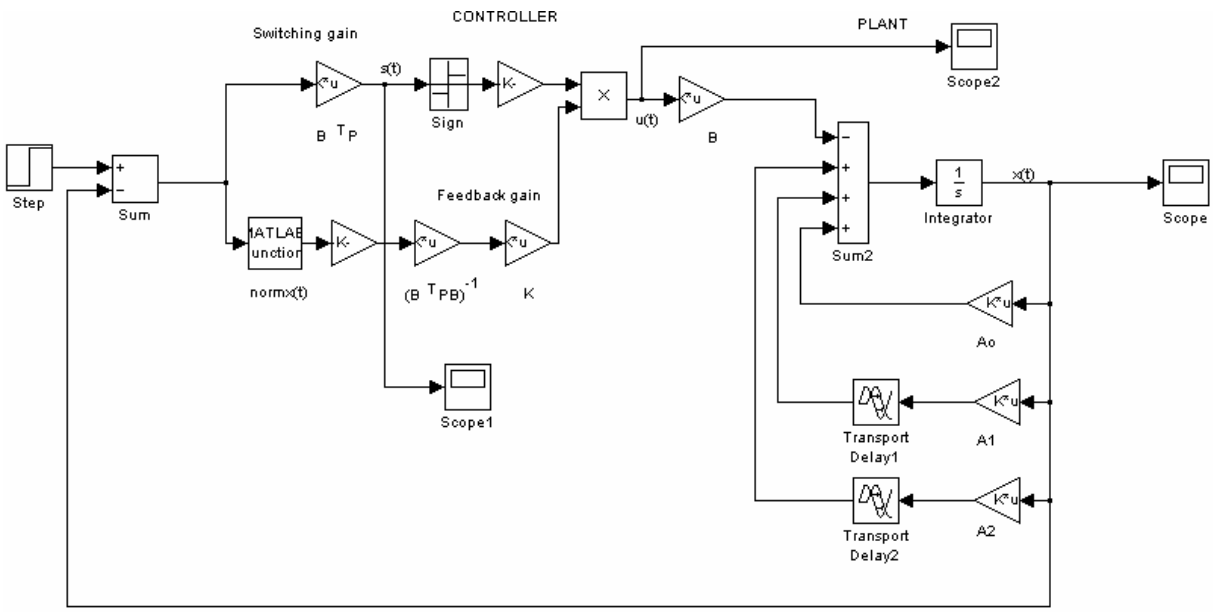

Figure 1. Block diagram of certain time-delay system with simple sliding mode control system

Published by WSEAS Press
www.wseas.org
ISBN: 978-960-474-050-5
ISSN: 1790-5117

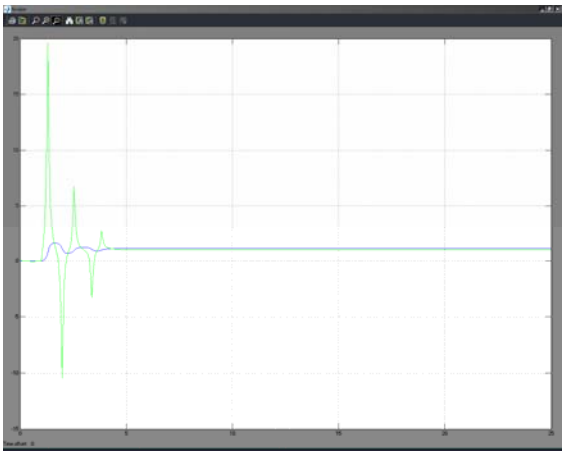

Figure 2. State responses

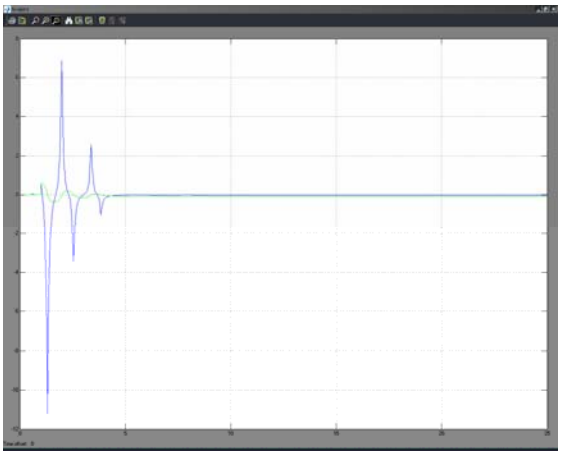

Figure 3. Switching functions

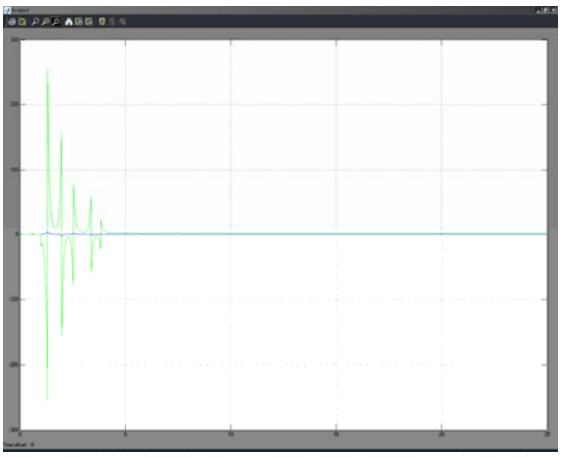

Figure 4. Control function

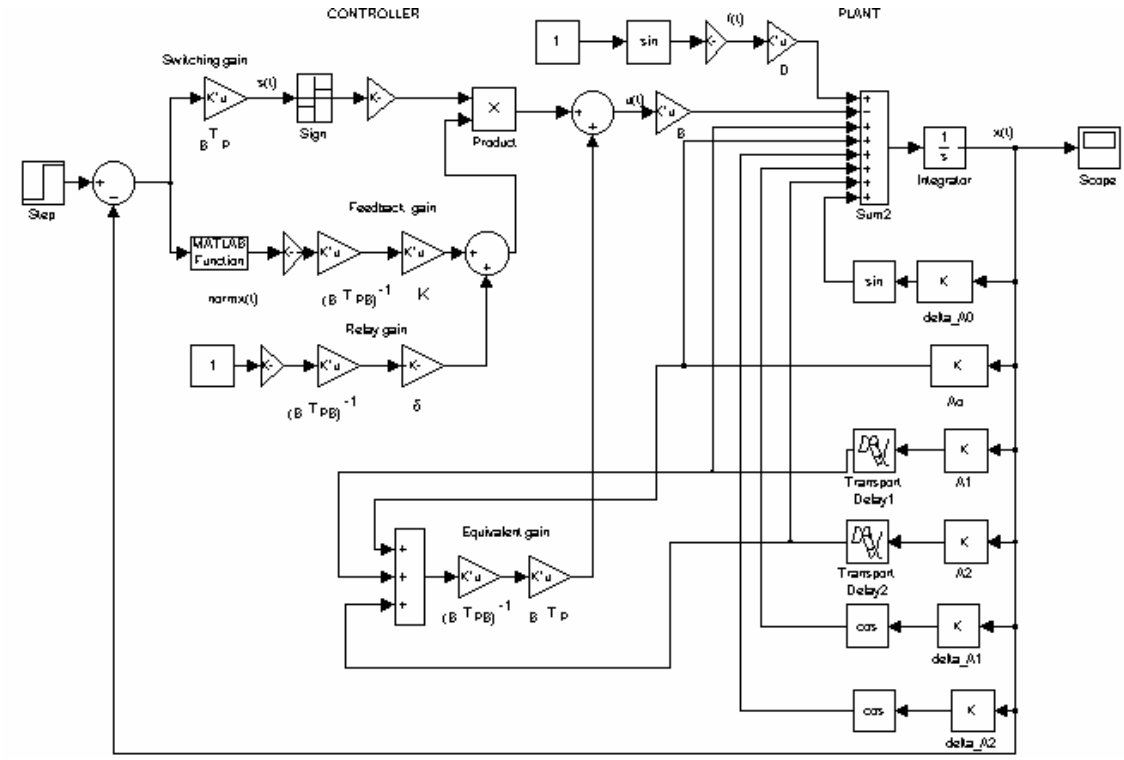

Figure 5. Block diagram of Uncertain Time-Delay System with Combined Sliding Mode Control

Published by WSEAS Press
www.wseas.org
ISBN: 978-960-474-050-5
ISSN: 1790-5117

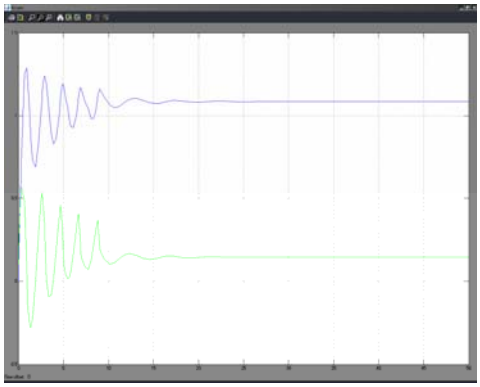

Figure 6 State responses

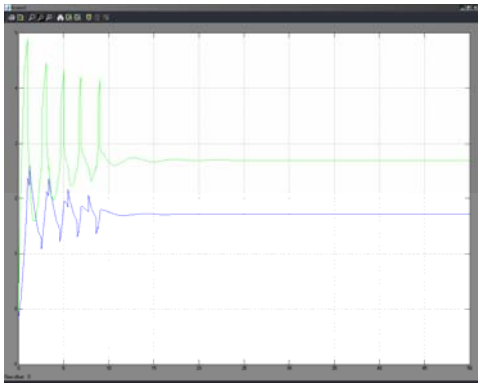

Figure 7 Control functions

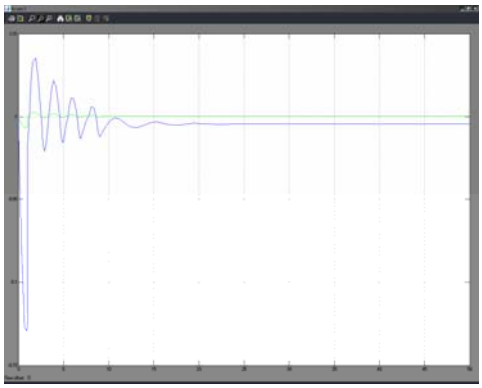

Figure 8 Switching functions

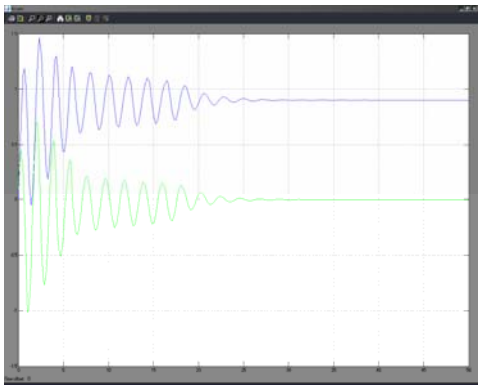

Figure 9 State responses

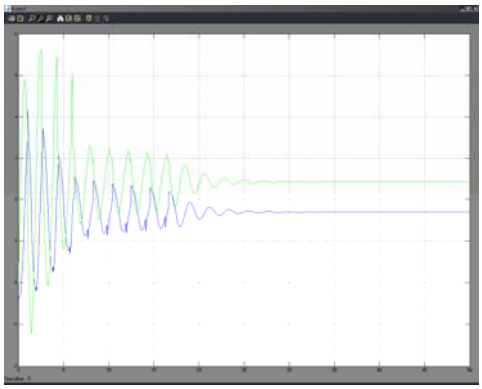

Figure 10 Control functions

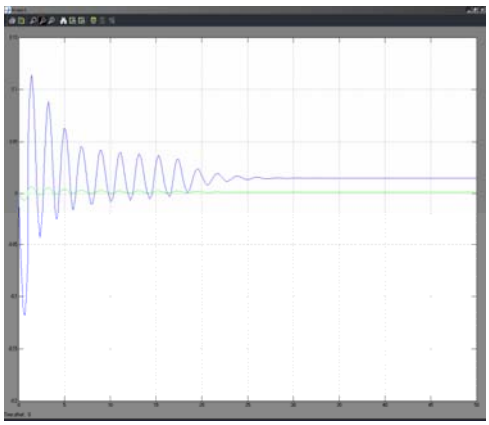

Figure 11 Switching functions

Published by WSEAS Press
www.wseas.org

ISBN: 978-960-474-050-5
ISSN: 1790-5117

4.4 References

1. Garofalo, F., and Glielmo, L. (Eds), 1996, Robust Control via Variable Structure and Lyapunov Techniques. London: Springer-Verlag.
2. Ha, Q.P., Rye, D.C. and Durrant-Whyte, H.F., 1999, Robust sliding mode control with application. International Journal of Control, vol. 72, no. 12, pp. 1087-1096.
3. Emelyanov, S.V., 1967, Variable Structure Control Systems (Moscow: Nauka) (in Russian).
4. Utkin, V.I., 1974, Sliding Modes and their Application in Variable Structure Systems, Nauka, Moscow, (in Russian)
5. Spurgeon, S. K., 1991, Choice of discontinuous control component for robust sliding mode performance. International Journal of Control, vol. 53, no. 1, pp. 163-179.
6. Edwards, CH. and Spurgeon, S.K, 1998, Sliding Mode Control. Theory and Applications (London: Taylor and Francis).
7. Shyu, K.K., and Yan, J.J., 1993, Robust stability of uncertain time-delay system and its stabilization by variable structure control. International Journal of Control, vol. 57, pp. 237-246.
8. Luo, N. and De La Sen, M, 1993, State feedback sliding mode control of a class of uncertain time-delay systems. Proceedings of IEE-D: Control Theory and Applications, vol. 140, no. 4, pp. 261-274.
9. Luo, N., De La Sen, M, and Rodellar, J., 1997, Robust stabilization of a class of uncertain time-delay systems in sliding mode. International Journal Robust and Nonlinear Control. vol.7, pp. 59-74.
10. Koshkouei, A.J., and Zinober, A.S.I., 1996, Sliding mode time-delay systems. Proceedings of the IEEE International Workshop on Variable Structure Systems, VSS'96, Tokyo, IEEE, pp. 97-101.
11. Lyapunov, A.M., 1992, The general problem of the stability of motion. International Journal of Control, vol. 55, pp. 531-773.
12. Krasovskii, N.N., 1959, Some Problems of Stability of Motion (Moscow, Phusmatgiz, in Russian); 1963, Stability of Motion: Application of Lyapunov's Second Method to Differential Systems and Equations with Time-Delay (Stanford: SU Press).
13. Jafarov-Dzhafarov, E.M, 1980, Study of the stability of VSS with time-delay. Novel Approaches in the Theory of VSS. Emelyanov, S.V. (Ed.), Proceedings of VNIISI AN SSSR, 4, Moscow, pp. 24-28 (in Russian).
14. Jafarov, E.M., 1998, State feedback sliding mode control for SISO systems with time-delay. Proceedings of IFAC 8th Symposium on Large Scale Systems: Theory and Applications, University of Patras, Rio, Greece 195-200;
15. Nazaroff, G. J., 1973, Stability and stabilization of linear differential delay systems. IEEE Transactions on Automatic Control, vol. 18, pp. 317-318.
16. Li, X. and Decarlo, R.A., 2001, Memoryless sliding mode control of uncertain time-delay systems. In Proc. of 2001 American Control Conference, Crystal Gateway Marriot, Arlington, Virginia, June 25-27.
17. Li, X. and Decarlo, R.A., 2003, Robust sliding mode control of uncertain systems, International Journal of Control, vol. 76, no. 13, pp.1296-1305.
18. Perruquetti, W., and Barbot, J.P., 2002, Sliding Mode Control in Engineering, Marcel Dekker, New York.
19. Richard, J.P., Gouaisbaut, F, and Perruquetti, W., 2001, Sliding mode control in the presence of delay, Kibernetica, vol.37, pp. 277-294.
20. Gouaisbaut, F., Dambrine, M., and Richard, J.P., 2002, Robust control of delay systems: a sliding mode control design via LMI, ELSEVIER, Systems and Control Letters, vol. 46, pp. 219-230
21. Yan, J.J., 2003, Sliding mode control design for uncertain time-delay systems subjected to a class of nonlinear inputs, International Journal of Robust and Nonlinear control, vol. 13, pp. 519-532.
22. Choi, H.H., 2004, An analysis and design method for uncertain variable structure systems with bounded controllers, IEEE Transactions on Automatic Control, vol. 49, no. 4, pp. 602-607.

Published by WSEAS Press
www.wseas.org
ISBN: 978-960-474-050-5
ISSN: 1790-5117

23. Richard, J.P, 2003, Time-delay systems: an overview of some recent advances and open problems, Automatica, vol. 39, pp. 1667-1694.
24. Jafarov, E.M., 2003, Delay-dependent stability and α-stability criterions for linear time delay-systems, WSEAS Transactions on Systems, Issue 4, vol. 2, pp.1138-1147.
25. Cheres, E., Gutman, S., and Palmor, Z.J., 1989 Stabilization of uncertain dynamic systems including state delay. IEEE Transactions on Automatic Control, vol. 34, pp. 1199-1203.
26. Jafarov, E.M., 2003, Robust sliding mode controller of multivariable time-delay systems, Proc. 16th Int. Conference on Systems Engineering, ICSE'2003, Coventry Univ. UK, 5-11 September, pp.288-296.
27. Drazenovic, B., 1969, The invariance conditions in variable structure systems. Automatica, vol. 5, pp. 287-295.
28. Thowsen, A., 1981, Stabilization of a class of linear time-delay systems. International Journal of System Science, vol. 12, pp. 1485-1492.
29. Utkin, V.I., 1977, Variable structure system with sliding modes. IEEE Transactions on Automatic Control, vol. 22, pp. 212-222.
30. Ryan, E.P., 1983, A variable structure approach to feedback regulation of uncertain dynamical systems. Int. Journal of Control, vol. 38, no. 6, pp. 1121-1134.
31. El-Ghezawi, O.M.E., Zinober, A.S.I. and Billing, S.A., 1983, Analysis and design of variable structure system using a geometric approach. International Journal of Control, 38, 657-671
32. Razumikhin, B.S., 1956, On the stability of system with a delay. Prikladnaya Mathematica i Mekhanica, 20, iss 4, 500-512 (in Russian).
33. Hale, J., 1977, Theory of Functional Equations (New York: Springer-Verlag)
34. Mahmoud, M.S., and Al-Muthairi, N., 1994, Design of robust controllers for time-delay systems. IEEE Transactions on Automatic Control, vol. 39, pp. 995- 999.
35. Young, K.D., Utkin, V.I., and Özgüner, U., 1999, A control engineer's guide to sliding mode control. IEEE Transactions on Control Systems Technology, vol. 7, no. 3, pp. 328-342.
36. Dorling, C.M. and Zinober, A.S.I., 1988, Robust hyperplane design in multivariable structure control systems. International Journal of Control, vol. 48, no. 5, pp. 2043-2054.
37. Calise A.J., Kramer, F.S., 1984. A variable structure approach to robust control of VTOL aircraft, International Journal of Guidance, Control and Dynamics, vol. 7, no. 5, pp. 620-626.
38. Blakelock, J.H., 1991. Automatic Control of Aircraft and Missiles. New York, John Wiley.
39. Slotine, J.-J.E., and Li, W., 1991, Applied Nonlinear Control, New Jersey, Prentice-Hall.
40. Esfandiari, F., and Khalil, H.K., 1991, Stability analysis of a continuous implementation of variable structure control, IEEE Trans. on Automatic Control, vol. 36, no. 5, pp. 616-620.
41. Jafarov, E.M., and Tasaltin, R., 2000, Robust sliding-mode control for uncertain MIMO aircraft model F-18. IEEE Trans. on Aerospace and Electronic Systems, vol. 36, no. 4, pp. 1127-1141.
42. Jafarov, E.M., and Tasaltin, R., 2001, Design of autopilot-output integral sliding mode controllers for guided missile systems with parameter perturbations. Aircraft Engineering and Aerospace Technology: An International Journal, vol. 73, no. 1, pp. 16-25.
43. Jafarov, E.M., 2005, Robust sliding mode controllers design techniques for stabilization of multivariable time-delay systems with parameter perturbations and external disturbances, International Journal of Systems Science, vol. 36, no. 7, pp. 433-444.
44. Sabanovic, A., Fridman, L. and Spurgeon, S. (Editors) 2004, "Variable Structure Systems: from Principles to Implementation", The Institution of Electrical Engineering, London.
45. Jafarov, E.M, 1990, "Analysis and synthesis of multi-dimensional VSS with delays in sliding modes", in Proceedings of 11th IFAC World Congress, Tallin, vol. 66, pp.46-49.
46. Zheng, F., Cheng, M. and W. B. Gao, 1993, "Variable structure control of systems with delays in control", Control and Decision, vol. 8, no.2, pp.95-100. (in Chinese).
47. Hu, K.J, Basker, V. R. and O. D. Crisalle, 1998, "Sliding mode control of uncertain input delay systems", in Proceedings of the 1998 American Control Conference, Philadelphia, Pennsylvania USA, vol.1, pp. 564-568.
48. Jafarov, E.M, 2000, "Design of sliding mode control for multi-input systems with multiple state delays", in Proceedings of 2000 American Control Conference, The Hyatt Regency Hotel, Chicago, Illinois, USA, June 28-30, pp. 1139-1143.

Published by WSEAS Press
www.wseas.org
ISBN: 978-960-474-050-5
ISSN: 1790-5117

49. Jafarov, E. M., 2003, "Robust sliding mode control of multivariable time-delay systems", Systems Science Journal, vol.29, no.3, pp.17-36.
50. Niculescu, S.I. and Gu, K., 2004, "Advances in Time-Delay Systems", Springer, Berlin.
51. Gu, K., Kharitonov, V. and Chen, J., 2003, "Stability of Time-Delay Systems", Birkhauser, Boston.
52. Ulsoy, G, Misawa, A. and Utkin V. (Eds), 2000, Transactions of the ASME, Journal of Dynamic Systems, Measurement, and Control, Special Issue on Variable Structure Systems, vol. 122, No 4, pp. 583-821.
53. Fridman, E., Fridman, L. and Shustin, E., 2000, "Steady modes in relay control systems with time-delay and periodic disturbances", Transactions of the ASME, Journal of Dynamic Systems, Measurement, and Control, vol. 122, No 4, pp.732-737.
54. Boyd, S., El Ghaoi, L., Feron, E. and V. Ballakrishnan, 1994, Linear Matrix Inequalities in Systems and Control Theory, PA: SIAM, 15, Philadelphia.
55. Kreindler, E. And A. Jameson, 1972, "Conditions for non-negativeness of partitioned matrices", IEEE Transactions on Automatic Control, vol.18, pp. 147-148.
56. Ge, J.H., Frank, P.M. and Lin, C.F., 1996, "H_∞ control via output feedback for state delayed systems", International Journal of Control, vol. 64, No 1, pp.1-7.
57. Petersen, I.R., 1987, "Disturbance attenuation and H^∞ optimization: A design method on the algebraic Riccati equation", IEEE Transactions on Automatic Control, vol. AC-32, No 5, pp.427-429.
58. Su, H., Chu, J., and Wang, J., 1998, "A memoryless robust stabilizing controller for a class of uncertain linear time-delay systems", International Journal of Systems Science, vol. 29, No 2, pp. 191-197.
59. Cao, Y. Y., and Sun, Y. X., 1998, "Robust stabilization of uncertain systems with time-varying multistate delay", IEEE Transactions on Automatic Control, vol.43, No 10, pp. 1484-1488.
60. Choi, H.H., 2002, "Variable structure output feedback control design for a class of uncertain dynamic systems", Automatica, vol.38, pp. 335-341.
61. Wu, H., and Mizukami, K., 1996, "Linear and non-linear stabilizing continuous controllers of uncertain dynamical systems including state delay", IEEE Transaction on Automatic Control, vol.41, no.1, pp.116-121.
62. Kim, K. S., Park, Y. and Oh S.H., 2000, "Designing robust sliding hyperplanes for parametric uncertain systems: a Riccati approach", Automatica, vol.36, pp.1041-1048.
63. Su, H., Ji, X. and Chu, J., 2005, "New results of robust quadratically stabilizing control for uncertain linear time-delay systems", International Journal of Systems Science, vol.36, no.1, pp.27-37.

Published by WSEAS Press
www.wseas.org
ISBN: 978-960-474-050-5
ISSN: 1790-5117

4.5 Robust Delay-Dependent Stabilization of Uncertain Time-Delay Systems by Variable Structure Control

In this paper, the problem of robust sliding mode controller design for uncertain multivariable systems with several fixed state delays is addressed. A new combined sliding mode controller is considered and designed for the delay-dependent stabilization of perturbed sliding time-delay systems with matched parameter uncertainties and external disturbances. Delay-dependent stability and sliding mode existence conditions are derived by using modified Lyapunov-Krasovskii functionals and formulated in terms of LMI. The allowable upper bounds on the time-delay are determined from the improved LMI stability conditions. Two numerical examples are given to illustrate the usefulness of the proposed design method.

4.5.1 Introduction

It is well known that many engineering control systems such as conventional oil-chemical industrial processes, nuclear reactors, long transmission lines in pneumatic, hydraulic and rolling mill systems, flexible joint robotic manipulators and machine-tool systems, jet engine and automobile control, human-autopilot systems, ground controlled satellite and networked control and communication systems, space autopilot and missile-guidance systems, etc. contain some time-delay effects, model uncertainties and external disturbances. These processes and plants can be modeled by some uncertain dynamical systems with state and input delays. The existence of time-delay effects is frequently a source of instability and it degrades the control performances. The stabilization of systems with time-delay is not easier than that of systems without time-delay. Therefore, the problem of robust stabilization of uncertain time-delay systems by various types of controllers such as PID controller, Smith predictor, and time-delay controller, recently, sliding mode controllers have received considerable attention of researchers. However, in contrast to variable structure systems without time-delay, there is relatively no large number of papers concerning the sliding mode control of time-delay systems. As known from [1]- [7] etc. sliding mode control has several useful advantages, e.g. fast response, good transient performance, and robustness to plant parameter variations and external disturbances. For this reason, now, sliding mode control is considered as an efficient tool to design of robust controllers for stabilization of complex systems with parameter perturbations and external disturbances. Some new problems of the sliding mode control of time-delay systems have been addressed in papers [8]-[13].Shyu and Yan [8] have established a new sufficient condition to guarantee the robust stability and β-stability for uncertain systems with single time-delay. By these conditions a variable structure controller is designed to stabilize the time-delay systems with uncertainties. Koshkoei and Zinober [9] have designed a new sliding mode controller for MIMO canonical controllable time-delay systems with matched external disturbances by using Lyapunov-Krasovskii functional. Li and DeCarlo [10] have proposed a new robust four terms sliding mode controller design method for a class of multivariable time-delay systems with unmatched parameter uncertainties and matched external disturbances by using the Lyapunov-Krasovskii functional combined by LMI's techniques. The behavior and design of sliding mode control systems with state and input delays are considered by Perruquetti and Barbot [3] by using Lyapunov-Krasovskii functional.

Four-term robust sliding mode controllers for matched uncertain systems with single or multiple, constant or time varying state delays are designed by Gouaisbaut, Dambrine and Richard [11] by using Lyapunov-Krasovskii functionals and Lyapunov-Razumikhin function combined with LMI's techniques. The five terms sliding mode controllers for time-varying delay systems with structured parameter uncertainties have been designed by Fridman, Gouisbaut,, Dambrine and Richard via descriptor approach combined by Lyapunov-Krasovskii functional method[12]. In [13] some new delay-dependent stability criteria for multivariable uncertain networked control systems with several constant delays based on Lyapunov-Krasovskii functional combined with descriptor approach and LMI techniques are developed by Cao, Zhong and Hu.

Motivated by these investigations, the problem of sliding mode controller design for uncertain multi-input systems with several fixed state delays is addressed in this paper. A new combined sliding mode controller is considered and designed for the delay-dependent stabilization of perturbed multi-input time-delay systems with matched parameter uncertainties and external disturbances. Delay-dependent

Published by WSEAS Press
www.wseas.org
ISBN: 978-960-474-050-5
ISSN: 1790-5117

LMI stability and sliding mode existence conditions are derived by using modified Lyapunov-Krasovskii functionals and formulated in terms of LMI. Upper delay bounds are determined from the improved stability conditions.
Two numerical examples are given to illustrate the usefulness of the proposed design method.

4.5.2 System description and assumptions

Let us consider a multi-input state time-delay systems with matched parameter uncertainties and external disturbances described by the following state-space equation:

$$\dot{x}(t) = (A_0 + \Delta A_0)x(t) + (A_1 + \Delta A_1)x(t-h_1) + \ldots + (A_N + \Delta A_N)x(t-h_N) + Bu(t) + Df(t),\ \mathrm{t} > 0$$

$$x(t) = \phi(t)\ ,\ -h \le t \le 0 \tag{1}$$

where $x(t) \in R^n$ is the measurable state vector, $u(t) \in R^m$ is the control input, $A_0, A_1, .., A_N$ and B are known constant matrices of appropriate dimensions, with B of full rank, $h = \max[h_1, h_2, ..., h_N], h_i > 0$, $h_1, h_2, ..., h_N$ are known constant time-delays, $\phi(t)$ is a continuous vector–valued initial function in $-h \le t \le 0$; $\Delta A_0, \Delta A_1, \ldots, \Delta A_N$ and D are the parameter uncertainties, $f(t)$ is unknown but norm-bounded external disturbances.

Taking known advantages of sliding mode, we want to design a simple suitable sliding mode controller for stabilization of uncertain time-delay system (1).

We need to make the following conventional assumptions for our design problem.

Assumption 1:

a) (A_0, B) is stabilizable;

b) The parameter uncertainties and external disturbances are matched with the control input, i.e. there exist some matrices $E_0(t), E(t), E_1(t), \ldots, E_N(t)$, such that:

$$\begin{aligned} &\Delta A_0(t) = BE_0(t) \\ &\Delta A_1(t) = BE_1(t) \\ &\vdots \\ &\Delta A_N(t) = BE_N(t) \\ &D(t) = BE(t) \end{aligned} \tag{2}$$

with norm-bounded matrices:

$$\begin{aligned} &\max_t \|\Delta E_0(t)\| \le \alpha_0 \\ &\max_t \|\Delta E_1(t)\| \le \alpha_1 \\ &\vdots \\ &\max_t \|\Delta E_N(t)\| \le \alpha_N \\ &\|E(t)\| = \alpha \\ &\|G\| = g \\ &\|f(t)\| \le f_0 \end{aligned} \tag{3}$$

where $\alpha_0, \alpha_1, \alpha_1, ...\alpha_n, g$ and f_0 are known positive scalars.

The control goal is to design a combined variable structure controller for robust stabilization of time delay system (1) with parameter uncertainties and external disturbances.

4.5.3 Control law and sliding surface

To achieve this goal, we form the following type of relatively simple combined variable structure controller:

$$u(t) = u_{lin}(t) + u_{eq}(t) + u_{VS}(t) + u_R(t) \tag{4}$$

Published by WSEAS Press
www.wseas.org
ISBN: 978-960-474-050-5
ISSN: 1790-5117

where

$$u_{lin}(t) = -Gx(t) \tag{5}$$

$$u_{eq}(t) = -(CB)^{-1}\left[CA_0x(t) + CA_1x(t-h) + \ldots + CA_Nx(t-h_N)\right] \tag{6}$$

$$u_{VS}(t) = -[k_0\left\|x(t)\right\| + k_1\left\|x(t-h_1)\right\| + \ldots + k_N\left\|x(t-h_N)\right\|]\frac{s(t)}{\left\|s(t)\right\|} \tag{7}$$

$$u_R = -\delta\frac{s(t)}{\left\|s(t)\right\|} \tag{8}$$

where $k_1,...,k_N$ and δ are the scalar gain parameters to be selected; G is a design matrix; $(CB)^{-1}$ is a non-singular $m \times m$ matrix. The sliding surface on which the perturbed time-delay system states must be stable can be defined as a linear function of the undelayed system states as follows:

$$s(t) = \Gamma Cx(t) \tag{9}$$

where C is a gain $m \times n$ matrix of full rank to be selected; Γ is chosen as identity $m \times m$ matrix that is used to diagonalize the control.

Note that, constructed sliding mode controller consists of four terms:

1) The linear control term is needed to guarantee that the system states can be stabilized on the sliding surface:

2) The equivalent control term for the compensation of the nominal part of the perturbed time-delay system;

3) The variable structure control term for the compensation of parameter uncertainties of the system matrices;

4) The min-max or relay term for the rejection of the external disturbances.

Structure of these control terms is typical and very simple in their practical implementation. Equivalent control term (6) for non-perturbed time-delay system is determined from the following equations:

$$\dot{s}(t) = C\dot{x}(t) = CA_0x(t) + CA_1x(t-h_1) + ... + CA_Nx(t-h_N) + CBu(t) = 0 \tag{10}$$

Substituting (6) into (1) we have a non-perturbed or ideal sliding time-delay motion of the nominal system as follows:

$$\dot{x}(t) = \overline{A}_0x(t) + \overline{A}_1x(t-h_1) + \ldots + \overline{A}_Nx(t-h_N) \tag{11}$$

where $(CB)^{-1}C = G_{eq}$, $A_0 - BG_{eq}A_0 = \overline{A}_0$, $A_1 - BG_{eq}A_1 = \overline{A}_1,...,A_N - BG_{eq}A_N = \overline{A}_N$ (12)

In order to make the delay-dependent stability analysis and choosing an appropriate Lyapunov-Krasovskii functional first let us transform the nominal sliding time-delay system (11) by using the Leibniz-Newton formula. Since x(t) is continuously differentiable for $t \geq 0$, using the Leibniz-Newton formula, the time-delay terms can be presented as:

$$x(t-h_1) = x(t) - \int_{t-h_1}^{t}\dot{x}(\theta)d\theta,...,x(t-h_N) = x(t) - \int_{t-h_N}^{t}\dot{x}(\theta)d\theta \tag{13}$$

Then, the system (11) can be rewritten as

$$\dot{x}(t) = (\overline{A}_0 + \overline{A}_1 + ... + A_N)x(t) - \overline{A}_1\int_{t-h_1}^{t}\dot{x}(\theta)d\theta - ... - \overline{A}_N\int_{t-h_N}^{t}\dot{x}(\theta)d\theta \tag{14}$$

Substituting again (11) into (14) yields

Published by WSEAS Press
www.wseas.org
ISBN: 978-960-474-050-5
ISSN: 1790-5117

$$
\begin{aligned}
\dot{x}(t) &= (\bar{A}_0 + \bar{A}_1 + \ldots + \bar{A}_N)x(t) - \bar{A}_1 \int_{t-h_1}^{t} \left[\bar{A}_0 x(\theta) + \bar{A}_1 x(\theta - h_1) + \ldots + \bar{A}_N x(\theta - h_N)\right] d\theta \\
&- \ldots - \bar{A}_N \int_{t-h_N}^{t} \left[\bar{A}_0 x(\theta) + \bar{A}_1 x(\theta - h_1) + \ldots + \bar{A}_N x(\theta - h_N)\right] d\theta \\
&= (\bar{A}_0 + \bar{A}_1 + \ldots + \bar{A}_N)x(t) - \bar{A}_1 \bar{A}_0 \int_{t-h_1}^{t} x(\theta) d\theta - \bar{A}_1^2 \int_{t-h_1}^{t} x(\theta - h_1) d\theta - \ldots - \bar{A}_1 \bar{A}_N \int_{t-h_1}^{t} x(\theta - h_N) d\theta \\
&- \ldots - \bar{A}_N \bar{A}_0 \int_{t-h_N}^{t} x(\theta) d\theta - \bar{A}_N \bar{A}_1 \int_{t-h_N}^{t} x(\theta - h_1) d\theta - \ldots - \bar{A}_N^2 \int_{t-h_N}^{t} x(\theta - h_N) d\theta
\end{aligned}
\tag{15}
$$

Then in adding to (15) the perturbed sliding time-delay system with control action (4) can be formulated as:

$$
\begin{aligned}
\dot{x}(t) &= (\tilde{A}_0 + \bar{A}_1 + \ldots + \bar{A}_N)x(t) - \bar{A}_1 \bar{A}_0 \int_{t-h_1}^{t} x(\theta) d\theta - \bar{A}_1^2 \int_{t-h_1}^{t} x(\theta - h_1) d\theta - \ldots - \bar{A}_1 \bar{A}_N \int_{t-h_1}^{t} x(\theta - h_N) d\theta \\
&- \ldots - \bar{A}_N \bar{A}_0 \int_{t-h_N}^{t} x(\theta) d\theta - \bar{A}_N \bar{A}_1 \int_{t-h_N}^{t} x(\theta - h_1) d\theta - \ldots - \bar{A}_N^2 \int_{t-h_N}^{t} x(\theta - h_N) d\theta + \Delta A_0 x(t) + \Delta A_1 x(t-h_1) + \ldots + \Delta A_N x(t-h_N) \\
&- B[k_0 \|x(t)\| + k_1 \|x(t-h_1)\| + \ldots + k_N \|x(t-h_N)\|] \frac{s(t)}{\|s(t)\|} - B\delta \frac{s(t)}{\|s(t)\|} + Df(t)
\end{aligned}
\tag{16}
$$

where $\tilde{A}_0 = \bar{A}_0 - BG$, the gain matrix G can be selected such that $\tilde{A}_0$ has the desirable eigenvalues.

The design parameters $G, C, k_0, k_1, \ldots, k_N, \delta$ of the combined controller (4) can be selected from the sliding conditions and stability analysis of the perturbed sliding time-delay system.

4.5.4 Robust stabilization on the sliding surface

In this section the sliding manifold is designed so that on it or in its neighborhood in different from existing methods the perturbed sliding time-delay system is globally asymptotically stable with respect to state coordinates. The stability results are formulated in the following theorem.

Theorem 1: Suppose that Assumption 1 holds. Then the transformed multivariable sliding time-delay system (16) with matched parameter perturbations and external disturbances driven by combined controller (4) and restricted by sliding surface s(t)=0 is robustly globally asymptotically delay-dependent stable with respect to the state variables, if the following modified LMI conditions and parameter requirements are satisfied:

$$
H = \begin{bmatrix}
H_{11} & -P\bar{A}_1\bar{A}_0 & -P\bar{A}_1^2 & \cdots & -P\bar{A}_1\bar{A}_N & -P\bar{A}_N\bar{A}_0 & -P\bar{A}_N\bar{A}_1 & \ldots & -P\bar{A}_N^2 & 0 & 0 & 0 & 0 \\
* & -\frac{1}{h_1}R_1 & 0 & & 0 & 0 & 0 & & 0 & & & & 0 \\
* & 0 & -\frac{1}{h_1}S_1 & & 0 & & & & & & & & 0 \\
\vdots & & & \ddots & 0 & & & & & & & & 0 \\
* & 0 & 0 & 0 & -\frac{1}{h_N}R_N & & & & & & & & 0 \\
* & 0 & 0 & 0 & 0 & & & & & & & & 0 \\
* & & & & & & & & & & & & 0 \\
\vdots & & & & & & & \ddots & & & & & 0 \\
0 & & & & & & & & -\frac{1}{h_1}S_N & 0 & 0 & 0 & 0 \\
0 & & & & & & & & 0 & 0 & -T_1 & 0 & 0 \\
0 & & & & & & & & 0 & 0 & 0 & \ddots & 0 \\
0 & 0 & 0 & 0 & 0 & 0 & 0 & & 0 & 0 & 0 & 0 & -T_N
\end{bmatrix} < 0 \tag{17}
$$

where $H_{11} = (\tilde{A}_0 + \bar{A}_1 + \ldots + \bar{A}_N)^T P + P(\tilde{A}_0 + \bar{A}_1 + \ldots + \bar{A}_N) + h_1(S_1 + R_1) + \ldots + h_N(S_N + R_N) + T_1 + \ldots + T_N$

Published by WSEAS Press
www.wseas.org
ISBN: 978-960-474-050-5
ISSN: 1790-5117

$$CB = B^T PB > 0 \tag{18}$$

$$\begin{aligned} &k_0 = \alpha_0; \\ &k_1 = \alpha_1; \\ &\vdots \\ &k_N = \alpha_N; \end{aligned} \tag{19}$$

$$\delta \geq f_o \tag{20}$$

where $P, R_1, \ldots R_N$ are some symmetric positive definite matrices which are a feasible solution of modified LMI (17) with (18); $\widetilde{A_0} = \overline{A_0} - BG$ is a stable matrix.

Proof: Let us choose a special augmented Lyapunov-Krasovskii functional as follows:

$$V = x^T(t)Px(t) + \sum_{i=1}^{N} \int_{-h_i}^{0} \int_{t+\theta}^{t} x^T(\rho)R_i x(\rho)d\rho\, d\theta + \sum_{i=1}^{N} \int_{-h_i}^{0} \int_{t+\theta-h_i}^{t} x^T(\rho)S_i x(\rho)d\rho\, d\theta + \sum_{i=1}^{N} \int_{t-h_i}^{t} x^T(\theta)T_i x(\theta)d\theta \tag{21}$$

The introduced special augmented functional (21) involves three particular terms: first term V_1 is standard Lyapunov function, second and third are non-standard terms, namely V_2 and V_3 are similar, except for the length integration horizon [t-h, t] for V_2 and [t+θ-h, t] for V_3, respectively. This functional is different from existing ones.

The time-derivative of (21) along the perturbed time-delay system (16)can be calculated as:

$$\begin{aligned} \dot{V} =& x^T(t)\Big[(\tilde{A}_0 + \overline{A}_1 + \ldots + \overline{A}_N)^T P + P(\tilde{A}_0 + \overline{A}_1 + \ldots + \overline{A}_N) + h_1(S_1 + R_1) + \ldots + h_N(S_N + R_N) + T_1 + \ldots + T_N\Big]x(t) \\ &-2x^T(t)P\overline{A}_1\overline{A}_0 \int_{t-h_1}^{t} x(\theta)d\theta - 2x^T(t)P\overline{A}_1^2 \int_{t-h_1}^{t} x(\theta-h_1)d\theta - \ldots - 2x^T(t)P\overline{A}_1\overline{A}_N \int_{t-h_1}^{t} x(\theta-h_N)d\theta \\ &- \ldots - 2x^T(t)P\overline{A}_N\overline{A}_0 \int_{t-h_N}^{t} x(\theta)d\theta - 2x^T(t)P\overline{A}_N\overline{A}_1 \int_{t-h_N}^{t} x(\theta-h_1)d\theta - \ldots - 2x^T(t)P\overline{A}_N^2 \int_{t-h_N}^{t} x(\theta-h_N)d\theta - h_1 \int_{t-h_1}^{t} x^T(\theta)R_1 x(\theta)d\theta \\ &- \ldots - h_N \int_{t-h_N}^{t} x^T(\theta)R_N x(\theta)d\theta - h_1 \int_{t-h_1}^{t} x^T(\theta-h_1)S_1 x(\theta-h_1)d\theta - \ldots - h_N \int_{t-h_N}^{t} x^T(\theta-h_N)S_N x(\theta-h_N)d\theta \\ &-x^T(t-h_1)T_1x(t-h_1) - x^T(t-h_N)T_Nx(t-h_N) + 2x^T(t)P\Delta A_1x(t-h_1) + \ldots + 2x^T(t)P\Delta A_Nx(t-h_N) \\ &-2x^T(t)PB[k_0\|x(t)\| + k_1\|x(t-h_1)\| + \ldots + k_N\|x(t-h_N)\|]\frac{s(t)}{\|s(t)\|} - 2x^T(t)PB\delta\frac{s(t)}{\|s(t)\|} + x^T(t)PDf(t) \end{aligned} \tag{22}$$

Since for some h>0 Noldus inequality holds:

$$\begin{aligned} &h_1 \int_{t-h_1}^{t} x^T(\theta)R_1 x(\theta)d\theta \geq \left[\int_{t-h_1}^{t} x(\theta)d\theta\right]^T R_1 \left[\int_{t-h_1}^{t} x(\theta)d\theta\right] \\ &h_1 \int_{t-h_1}^{t} x^T(\theta-h_1)S_1 x(\theta-h_1)d\theta \geq \left[\int_{t-h_1}^{t} x(\theta-h_1)d\theta\right]^T S_1 \left[\int_{t-h_1}^{t} x(\theta-h_1)d\theta\right] \end{aligned} \tag{23}$$

and $x^T(t)PB = s^T(t)$ then (22) becomes as:

$$\begin{aligned} \dot{V} \leq& x^T(t)\Big[(\tilde{A}_0 + \overline{A}_1 + \ldots + \overline{A}_N)^T P + P(\tilde{A}_0 + \overline{A}_1 + \ldots + \overline{A}_N) + h_1(S_1 + R_1) + \ldots + h_N(S_N + R_N) + T_1 + \ldots + T_N\Big]x(t) - 2x^T(t)P\overline{A}_1\overline{A}_0 \int_{t-h_1}^{t} x(\theta)d\theta - 2x^T(t)P\overline{A}_1^2 \int_{t-h_1}^{t} x(\theta-h_1)d\theta \\ &- \ldots - 2x^T(t)P\overline{A}_1\overline{A}_N \int_{t-h_1}^{t} x(\theta-h_N)d\theta - \ldots - 2x^T(t)P\overline{A}_N\overline{A}_0 \int_{t-h_N}^{t} x(\theta)d\theta - 2x^T(t)P\overline{A}_N\overline{A}_1 \int_{t-h_N}^{t} x(\theta-h_1)d\theta - \ldots - 2x^T(t)P\overline{A}_N^2 \int_{t-h_N}^{t} x(\theta-h_N)d\theta \\ &-\frac{1}{h_1}\left[\int_{t-h_1}^{t} x(\theta)d\theta\right]^T R_1 \left[\int_{t-h_1}^{t} x(\theta)d\theta\right] - \ldots - \frac{1}{h_N}\left[\int_{t-h_N}^{t} x(\theta)d\theta\right]^T R_N \left[\int_{t-h_N}^{t} x(\theta)d\theta\right] - \frac{1}{h_1}\left[\int_{t-h_1}^{t} x(\theta-h_1)d\theta\right]^T S_1 \left[\int_{t-h_1}^{t} x(\theta-h_1)d\theta\right] \\ &- \ldots - \frac{1}{h_N}\left[\int_{t-h_N}^{t} x(\theta-h_N)d\theta\right]^T S_N \left[\int_{t-h_N}^{t} x(\theta-h_N)d\theta\right] - x^T(t-h_1)T_1x(t-h_1) - x^T(t-h_N)T_Nx(t-h_N) + 2x^T(t)PBE_1x(t-h_1) + \ldots + 2x^T(t)PBE_Nx(t-h_N) \end{aligned}$$

Published by WSEAS Press
www.wseas.org
ISBN: 978-960-474-050-5
ISSN: 1790-5117

$$-2x^T(t)PB[k_0\|x(t)\|+k_1\|x(t-h_1)\|+\ldots+k_N\|x(t-h_N)\|]\frac{s(t)}{\|s(t)\|}-2x^T(t)PB\delta\frac{s(t)}{\|s(t)\|}+x^T(t)PBEf(t)$$

$$\le x^T(t)\Big[(\tilde{A}_0+\bar{A}_1+\ldots+\bar{A}_N)^TP+P(\tilde{A}_0+\bar{A}_1+\ldots+\bar{A}_N)+h_1(S_1+R_1)+\ldots+h_N(S_N+R_N)+T_1+\ldots+T_N\Big]x(t)\ -2x^T(t)P\bar{A}_1\bar{A}_0\int_{t-h_1}^{t}x(\theta)d\theta-2x^T(t)P\bar{A}_1^2\int_{t-h_1}^{t}x(\theta-h_1)d\theta$$

$$-\ldots-2x^T(t)P\bar{A}_1\bar{A}_N\int_{t-h_1}^{t}x(\theta-h_N)d\theta-\ldots-2x^T(t)P\bar{A}_N\bar{A}_0\int_{t-h_N}^{t}x(\theta)d\theta-2x^T(t)P\bar{A}_N\bar{A}_1\int_{t-h_N}^{t}x(\theta-h_1)d\theta-\ldots-2x^T(t)P\bar{A}_N^2\int_{t-h_N}^{t}x(\theta-h_N)d\theta$$

$$-\frac{1}{h_1}\left[\int_{t-h_1}^{t}x(\theta)d\theta\right]^T R_1\left[\int_{t-h_1}^{t}x(\theta)d\theta\right]-\ldots-\frac{1}{h_N}\left[\int_{t-h_N}^{t}x(\theta)d\theta\right]^T R_N\left[\int_{t-h_N}^{t}x(\theta)d\theta\right]-\frac{1}{h_1}\left[\int_{t-h_1}^{t}x(\theta-h_1)d\theta\right]^T S_1\left[\int_{t-h_1}^{t}x(\theta-h_1)d\theta\right]$$

$$-\ldots-\frac{1}{h_N}\left[\int_{t-h_N}^{t}x(\theta-h_N)d\theta\right]^T S_N\left[\int_{t-h_N}^{t}x(\theta-h_N)d\theta\right]-x^T(t-h_1)T_1x(t-h_1)-x^T(t-h_N)T_Nx(t-h_N)+2s^T(t)E_1x(t-h_1)+\ldots+2s(t)E_Nx(t-h_N)$$

$$-2s^T(t)[k_0\|x(t)\|+k_1\|x(t-h_1)\|+\ldots+k_N\|x(t-h_N)\|]\frac{s(t)}{\|s(t)\|}-2\delta s^T(t)\frac{s(t)}{\|s(t)\|}+s^T(t)Ef(t)$$

$$=\left[x(t)\ \int_{t-h_1}^{t}x(\theta)d\theta\ \int_{t-h_1}^{t}x(\theta-h_1)d\theta\ \cdots\ \int_{t-h_1}^{t}x(\theta-h_N)d\theta\ \int_{t-h_N}^{t}x(\theta)d\theta\ \int_{t-h_N}^{t}x(\theta-h_1)d\theta\ \ldots\ \int_{t-h_N}^{t}x(\theta-h_N)d\theta\ x(t-h_1)\ \cdots\ x(t-h_N)\right]$$

$$\begin{bmatrix}
H_{11} & -P\bar{A}_1\bar{A}_0 & -P\bar{A}_1^2 & \cdots & -P\bar{A}_1\bar{A}_N & -P\bar{A}_N\bar{A}_0 & -P\bar{A}_N\bar{A}_1 & \ldots & -P\bar{A}_N^2 & 0 & 0 & 0 & 0\\
* & -\frac{1}{h_1}R_1 & 0 & & 0 & 0 & 0 & & 0 & 0 & 0 & 0 & 0\\
* & 0 & -\frac{1}{h_1}S_1 & & 0 & & & & 0 & & & & 0\\
\vdots & 0 & 0 & \ddots & 0 & & & & 0 & & & & 0\\
* & 0 & 0 & & -\frac{1}{h_N}R_N & & & & 0 & & & & 0\\
* & 0 & 0 & & 0 & & & & 0 & & & & 0\\
* & 0 & 0 & & 0 & & & & 0 & & & & 0\\
\vdots & & & & & & & \ddots & 0 & & & & 0\\
* & 0 & 0 & & & & & & -\frac{1}{h_1}S_N & 0 & 0 & 0 & 0\\
0 & 0 & 0 & & & & & & 0 & 0 & -T_1 & 0 & 0\\
0 & 0 & 0 & & & & & & 0 & 0 & 0 & \ddots & 0\\
0 & 0 & 0 & & 0 & 0 & 0 & 0 & 0 & 0 & 0 & 0 & -T_N
\end{bmatrix}$$

$$\left[x(t)\ \int_{t-h_1}^{t}x(\theta)d\theta\ \int_{t-h_1}^{t}x(\theta-h_1)d\theta\ \cdots\ \int_{t-h_1}^{t}x(\theta-h_N)d\theta\ \int_{t-h_N}^{t}x(\theta)d\theta\ \int_{t-h_N}^{t}x(\theta-h_1)d\theta\ \ldots\ \int_{t-h_N}^{t}x(\theta-h_N)d\theta\ x(t-h_1)\ \cdots\ x(t-h_N)\right]^T$$

$$-[(k_0-\alpha_0)\|x(t)\|\|s(t)\|+(k_1-\alpha_1)\|x(t-h_1)\|\|s(t)\|+\ldots+(k_N-\alpha_N)\|x(t-h_N)\|\|s(t)\|]-(\delta-f_0)\|s(t)\| \qquad (24)$$

Since (17)- (20) hold, then (24) reduces to:

$$\dot{V}\le z^T(t)Hz(t)<0 \qquad (25)$$

where $H_{11}=(\tilde{A}_0+\bar{A}_1+\ldots+\bar{A}_N)^TP+P(\tilde{A}_0+\bar{A}_1+\ldots+\bar{A}_N)\ +h_1(S_1+R_1)+\ldots+h_N(S_N+R_N)+T_1+\ldots+T_N$

$$z^T(t)=\left[x(t)\ \int_{t-h_1}^{t}x(\theta)d\theta\ \int_{t-h_1}^{t}x(\theta-h_1)d\theta\ \cdots\ \int_{t-h_1}^{t}x(\theta-h_N)d\theta\ \int_{t-h_N}^{t}x(\theta)d\theta\ \int_{t-h_N}^{t}x(\theta-h_1)d\theta\ \ldots\ \int_{t-h_N}^{t}x(\theta-h_N)d\theta\ x(t-h_1)\ \cdots\ x(t-h_N)\right]$$

Therefore, we can conclude that the perturbed time-delay system (16), (4) is robustly globally asymptotically delay-dependent stable. Theorem 1 is proved.

Special case: Single state-delayed systems: For single state-delayed systems that are frequently encountered in control applications and testing examples equation of motion and control algorithm can be easily found from(1),(4),(16) letting N=1.Therefore, the modified LMI delay-dependent stability conditions for which are significantly reduced and can be summarized in the following Corollary.

Published by WSEAS Press
www.wseas.org
ISBN: 978-960-474-050-5
ISSN: 1790-5117

Corollary 1: Suppose that Assumption 1 holds. Then the transformed single-delayed sliding system (16) with matched parameter perturbations and external disturbances driven by combined controller (4) for which N=1 and restricted by sliding surface s(t)=0 is robustly globally asymptotically delay-dependent stable with respect to the state variables, if the following modified LMI conditions and parameter requirements are satisfied:

$$\mathrm{H}=\begin{bmatrix} (\tilde{\mathrm{A}}_0+\bar{A}_1)^{\mathrm{T}}\mathrm{P}+\mathrm{P}(\tilde{\mathrm{A}}_0+\bar{A}_1)+\mathrm{h}_1(\mathrm{S}_1+\mathrm{R}_1)+\mathrm{T}_1 & -\mathrm{P}\bar{\mathrm{A}}_1\bar{\mathrm{A}}_0 & -\mathrm{P}\bar{\mathrm{A}}_1^2 & 0 \\ -(\mathrm{P}\bar{\mathrm{A}}_1\bar{\mathrm{A}}_0)^{\mathrm{T}} & -\frac{1}{\mathrm{h}_1}R_1 & 0 & 0 \\ -(\mathrm{P}\bar{\mathrm{A}}_1^2)^{\mathrm{T}} & 0 & -\frac{1}{\mathrm{h}_1}S_1 & 0 \\ 0 & 0 & 0 & -T_1 \end{bmatrix}<0 \tag{26}$$

$$CB=B^T PB>0 \tag{27}$$

$$k_0=\alpha_0; k_1=\alpha_1; \tag{28}$$

$$\delta \geq f_o \tag{29}$$

Proof: The corollary follows from the proof of the Theorem 1letting N=1.

4.5.5 Existence conditions

The final step of the control design is the derivation of the sliding mode existence conditions or the reaching conditions for the perturbed time-delay system states to the sliding manifold in finite time. These results are summarized in the following theorem.

Theorem 2: Suppose that Assumption1holds. Then the perturbed multivariable time-delay system (1) states with matched parameter uncertainties and external disturbances driven by controller (4) converge to the siding surface s(t)=0 in finite time, if the following conditions are satisfied:

$$\begin{aligned} &k_0=\alpha_0+g; \\ &k_1=\alpha_1; \\ &\vdots \\ &k_N=\alpha_N; \end{aligned} \tag{30}$$

$$\delta \geq f_o \tag{31}$$

Proof: Let us choose a modified Lyapunov function candidate as:

$$V=\frac{1}{2}s^T(t)(CB)^{-1}s(t) \tag{32}$$

The time-derivative of(32) along the state trajectories of time-delay system (1),(4) can be calculated as follows:

$$\begin{aligned} \dot{V} &= s^T(t)(CB)^{-1}\dot{s}(t)=s^T(t)(CB)^{-1}C\dot{x}(t) \\ &= s^T(t)(CB)^{-1}C\left[A_0x(t)+A_1x(t-h_1)+\ldots+A_Nx(t-h_N)+\Delta A_0x(t)+\Delta A_1x(t-h_1)+\ldots+\Delta A_Nx(t-h_N)+Bu(t)+Df(t)\right] \\ &= s^T(t)(CB)^{-1}\left[CA_0x(t)+CA_1x(t-h_1)+\ldots+CA_Nx(t-h_N)+CBE_0x(t)+CBE_1x(t-h_1)+\ldots+CBE_Nx(t-h_N)\right. \\ &-CB\Big((CB)^{-1}\left[CA_0x(t)+CA_1x(t-h)+\ldots+CA_Nx(t-h_N)\right]-\left[k_0\|x(t)\|+k_1\|x(t-h_1)\|+\ldots+k_N\|x(t-h_N)\|\right]\frac{s(t)}{\|s(t)\|} \\ &\left.-Gx(t)-\delta\frac{s(t)}{\|s(t)\|}\Big)+C\,BEf(t)\right] \end{aligned}$$

Published by WSEAS Press
www.wseas.org
ISBN: 978-960-474-050-5
ISSN: 1790-5117

$$= s^T(t)[E_0x(t) + E_1x(t-h_1) + ... + E_Nx(t-h_N) - \left[k_0\|x(t)\| + k_1\|x(t-h_1)\| + ... + k_N\|x(t-h_N)\|\right]\frac{s(t)}{\|s(t)\|}$$

$$-Gx(t) - \delta\frac{s(t)}{\|s(t)\|} + Ef(t)]$$

$$\le -[(k_0 - \alpha_0 - g)\|x(t)\|\|s(t)\| + (k_1 - \alpha_1)\|x(t-h_1)\|\|s(t)\| + ... + (k_N - \alpha_N)\|x(t-h_N)\|\|s(t)\|] - (\delta - f_0)\|s(t)\| \quad (33)$$

Since (30),(31) hold, then (33) reduces to:

$$\dot{V} = s^T(t)(CB)^{-1}\dot{s}(t) \le -(\delta - f_0)\|s(t)\| \le -\eta\|s(t)\| \quad (34)$$

where

$$\eta = \delta - f_0 \ge 0 \quad (35)$$

Hence we can evaluate that

$$\dot{V}(t) \le -\eta\sqrt{\frac{2}{\lambda_{\min}(CB)^{-1}}}\sqrt{V(t)} \quad (36)$$

The last inequality (36) is known to prove the finite-time convergence of system (1), (4) towards the sliding surface s(t)=0 [1],[3]. Therefore, Theorem 2 is proved.

4.5.6 Numerical examples

In order to demonstrate the usefulness of the proposed control design techniques let us consider the following examples.

Example 1: Consider a time-delay system (1), (4) with parameters taken from [12]:

$$A_0 = \begin{bmatrix} 2 & 0 & 1 \\ 1.75 & 0.25 & 0.8 \\ -1 & 0 & 1 \end{bmatrix}; A_1 = \begin{bmatrix} -1 & 0 & 0 \\ -0.1 & 0.25 & 0.2 \\ -0.2 & 4 & 5 \end{bmatrix}; B = \begin{bmatrix} 0 \\ 0 \\ 1 \end{bmatrix}$$

$$\Delta A_0 = 0.2\sin(t)A_0\ , \Delta A_1 = 0.2\cos(t)A_1, f = 0.3\sin(t)$$

The LMI delay-dependent stability and sliding mode existence conditions are computed by MATLAB programming (see Appendix 1) where LMI Control Toolbox is used. The computational results are following:

$$\text{Geq} = \begin{bmatrix} 1.2573 & 2.5652 & 1.0000 \end{bmatrix}$$

$$\text{A0hat} = \begin{bmatrix} 2.0000 & 0 & 1.0000 \\ 1.7500 & 0.2500 & 0.8000 \\ -7.0038 & -0.6413 & -3.3095 \end{bmatrix}, \text{A1hat} = \begin{bmatrix} -1.0000 & 0 & 0 \\ -0.1000 & 0.2500 & 0.2000 \\ 1.5139 & -0.6413 & -0.5130 \end{bmatrix},$$

$$\text{eigA0hat} = \begin{bmatrix} -0.5298 + 0.5383i \\ -0.5298 - 0.5383i \\ 0.0000 \end{bmatrix}, \text{eigA1hat} = \begin{bmatrix} -0.2630 \\ -0.0000 \\ -1.0000 \end{bmatrix},$$

$$\text{G} = \begin{bmatrix} 3.3240 & 10.7583 & 3.2405 \end{bmatrix}, \text{A0til} = \begin{bmatrix} 2.0000 & 0 & 1.0000 \\ 1.7500 & 0.2500 & 0.8000 \\ -10.3278 & -11.3996 & -6.5500 \end{bmatrix}$$

$$\text{eigA0til} = \begin{bmatrix} -2.7000 \\ -0.8000 + 0.5000i \\ -0.8000 - 0.5000i \end{bmatrix}$$

Published by WSEAS Press
www.wseas.org
ISBN: 978-960-474-050-5
ISSN: 1790-5117

lhs = 1.0e+008

$$* \begin{bmatrix} -1.1632 & 0.4424 & -0.1828 & 0.1743 & -0.1030 & 0.1181 & -0.4064 & -0.1030 & -0.0824 & 0 & 0 & 0 \\ 0.4424 & -1.6209 & -0.1855 & 0.5480 & 0.2138 & 0.2098 & 0.3889 & 0.2138 & 0.1711 & 0 & 0 & 0 \\ -0.1828 & -0.1855 & -0.0903 & 0.0445 & 0.0026 & 0.0215 & -0.0142 & 0.0026 & 0.0021 & 0 & 0 & 0 \\ 0.1743 & 0.5480 & 0.0445 & -1.9320 & -0.2397 & -0.8740 & 0 & 0 & 0 & 0 & 0 & 0 \\ -0.1030 & 0.2138 & 0.0026 & -0.2397 & -1.0386 & -0.2831 & 0 & 0 & 0 & 0 & 0 & 0 \\ 0.1181 & 0.2098 & 0.0215 & -0.8740 & -0.2831 & -0.4341 & 0 & 0 & 0 & 0 & 0 & 0 \\ -0.4064 & 0.3889 & -0.0142 & 0 & 0 & 0 & -0.8783 & -0.1869 & -0.2951 & 0 & 0 & 0 \\ -0.1030 & 0.2138 & 0.0026 & 0 & 0 & 0 & -0.1869 & -1.0708 & -0.2699 & 0 & 0 & 0 \\ -0.0824 & 0.1711 & 0.0021 & 0 & 0 & 0 & -0.2951 & -0.2699 & -0.1587 & 0 & 0 & 0 \\ 0 & 0 & 0 & 0 & 0 & 0 & 0 & 0 & 0 & -0.2362 & 0.0730 & -0.0726 \\ 0 & 0 & 0 & 0 & 0 & 0 & 0 & 0 & 0 & 0.0730 & -0.7576 & -0.1159 \\ 0 & 0 & 0 & 0 & 0 & 0 & 0 & 0 & 0 & -0.0726 & -0.1159 & -0.0484 \end{bmatrix}$$

maxh1 = 1

$$P = 1.0e+008 * \begin{bmatrix} 1.1943 & -1.1651 & 0.1562 \\ -1.1651 & 4.1745 & 0.3597 \\ 0.1562 & 0.3597 & 0.1248 \end{bmatrix}, R1 = 1.0e+008 * \begin{bmatrix} 1.9320 & 0.2397 & 0.8740 \\ 0.2397 & 1.0386 & 0.2831 \\ 0.8740 & 0.2831 & 0.4341 \end{bmatrix}$$

$$S1 = 1.0e+008 * \begin{bmatrix} 0.8783 & 0.1869 & 0.2951 \\ 0.1869 & 1.0708 & 0.2699 \\ 0.2951 & 0.2699 & 0.1587 \end{bmatrix}, T1 = 1.0e+007 * \begin{bmatrix} 2.3624 & -0.7303 & 0.7264 \\ -0.7303 & 7.5758 & 1.1589 \\ 0.7264 & 1.1589 & 0.4838 \end{bmatrix}$$

$$eigsLHS = 1.0e+008 * \begin{bmatrix} -2.8124 \\ -2.0728 \\ -1.0975 \\ -0.9561 \\ -0.8271 \\ -0.7829 \\ -0.5962 \\ -0.2593 \\ -0.0216 \\ -0.0034 \\ -0.0000 \\ -0.0000 \end{bmatrix}$$

NormP = 4.5946e+008

$G = \begin{bmatrix} 3.3240 & 10.7583 & 3.2405 \end{bmatrix}$

NormG = 11.7171

invBtPB = 8.0109e-008

$BtP = 1.0e+007 * \begin{bmatrix} 1.5622 & 3.5970 & 1.2483 \end{bmatrix}$

$$eigP = 1.0e+008 * \begin{bmatrix} 0.0162 \\ 0.8828 \\ 4.5946 \end{bmatrix}, eigR1 = 1.0e+008 * \begin{bmatrix} 0.0070 \\ 0.9811 \\ 2.4167 \end{bmatrix}$$

$$eigS1 = 1.0e+008 * \begin{bmatrix} 0.0159 \\ 0.7770 \\ 1.3149 \end{bmatrix}, eigT1 = 1.0e+007 * \begin{bmatrix} 0.0000 \\ 2.5930 \\ 7.8290 \end{bmatrix}$$

k0= 11.9171; k1=0.2; $\delta \geq 0.3$; H<0;

Published by WSEAS Press
www.wseas.org
ISBN: 978-960-474-050-5
ISSN: 1790-5117

Considered time-delay system is delay-dependently robustly asymptotically stable for all constant delays $h \le 1$.

Example2: Now, let us consider a networked control time-delay system (1),(4) with parameters taken from [13]:

$$A_0 = \begin{bmatrix} -4 & 0 \\ -1 & -3 \end{bmatrix}, A_1 = \begin{bmatrix} -1.5 & 0 \\ -1 & -0.5 \end{bmatrix}, B = \begin{bmatrix} 2 \\ 2 \end{bmatrix}$$

$$\Delta A_0 = 0.5\sin(t)A_0 \ , \Delta A_1 = 0.5\cos(t)A_1 , f = 0.3\sin(t)$$

The LMI delay-dependent stability and sliding mode existence conditions are computed by MATLAB programming (see Appendix 2) where LMI Control Toolbox is used. The computational results are following:

maxh1 = 2.0000

$$\text{Geq} = \begin{bmatrix} 0.4762 & 0.0238 \end{bmatrix}, \text{A0hat} = \begin{bmatrix} -0.1429 & 0.1429 \\ 2.8571 & -2.8571 \end{bmatrix}, \text{A1hat} = \begin{bmatrix} -0.0238 & 0.0238 \\ 0.4762 & -0.4762 \end{bmatrix}$$

$$\text{eigA0hat} = \begin{bmatrix} -0.0000 \\ -3.0000 \end{bmatrix}, \text{eigA1hat} = \begin{bmatrix} -0.0000 \\ -0.5000 \end{bmatrix}, \text{A0til} = \begin{bmatrix} -4.1429 & -0.0571 \\ -1.1429 & -3.0571 \end{bmatrix}$$

$$\text{eigA0til} = \begin{bmatrix} -4.2000 \\ -3.0000 \end{bmatrix}$$

$$\text{lhs} = 1.0\text{e+004} * \begin{bmatrix} -8.4351 & 1.2170 & -0.6689 & 0.6689 & -0.1115 & 0.1115 & 0 & 0 \\ 1.2170 & -1.5779 & 0.6689 & -0.6689 & 0.1115 & -0.1115 & 0 & 0 \\ -0.6689 & 0.6689 & -4.2228 & 0.1400 & 0 & 0 & 0 & 0 \\ 0.6689 & -0.6689 & 0.1400 & -0.3442 & 0 & 0 & 0 & 0 \\ -0.1115 & 0.1115 & 0 & 0 & -3.8994 & -0.1364 & 0 & 0 \\ 0.1115 & -0.1115 & 0 & 0 & -0.1364 & -0.0653 & 0 & 0 \\ 0 & 0 & 0 & 0 & 0 & 0 & -6.7803 & -0.3390 \\ 0 & 0 & 0 & 0 & 0 & 0 & -0.3390 & -0.0170 \end{bmatrix}$$

$$\text{P} = 1.0\text{e+004} * \begin{bmatrix} 5.7534 & -0.1805 \\ -0.1805 & 0.4592 \end{bmatrix}, \text{R1} = 1.0\text{e+004} * \begin{bmatrix} 8.4457 & -0.2800 \\ -0.2800 & 0.6883 \end{bmatrix}$$

$$\text{S1} = 1.0\text{e+004} * \begin{bmatrix} 7.7987 & 0.2729 \\ 0.2729 & 0.1307 \end{bmatrix}, \text{T1} = 1.0\text{e+004} * \begin{bmatrix} 6.7803 & 0.3390 \\ 0.3390 & 0.0170 \end{bmatrix}$$

$$\text{eigsLHS} = 1.0\text{e+004} * \begin{bmatrix} -8.8561 \\ -6.7973 \\ -4.1971 \\ -3.9040 \\ -1.4904 \\ -0.0971 \\ -0.0000 \\ -0.0000 \end{bmatrix}$$

NormP = 5.7595e+004

$$\text{G} = \begin{bmatrix} 2.0000 & 0.1000 \end{bmatrix}$$

NormG = 2.0025

invBtPB = 4.2724e-006

Published by WSEAS Press
www.wseas.org
ISBN: 978-960-474-050-5
ISSN: 1790-5117

BtP = 1.0e+005 * $\begin{bmatrix} 1.1146 & 0.0557 \end{bmatrix}$, eigsP = 1.0e+004 * $\begin{bmatrix} 0.4530 \\ 5.7595 \end{bmatrix}$

eigsR1 = 1.0e+004 * $\begin{bmatrix} 0.6782 \\ 8.4558 \end{bmatrix}$, eigsS1 = 1.0e+004 * $\begin{bmatrix} 0.1210 \\ 7.8084 \end{bmatrix}$

eigsT1 = 1.0e+004 * $\begin{bmatrix} 0.0000 \\ 6.7973 \end{bmatrix}$

k0= 2.5025; k1=0.5; $\delta \geq 0.3$; H< 0;

The networked control time-delay system is delay-dependently robustly asymptotically stable for all constant time-delays $h \leq 2.0000$ .Thus, we have designed all the parameters of the combined sliding mode controller. Numerical examples show the usefulness of the proposed design approach.

4.5.7 Conclusions

The problem of the robust sliding mode controller design for matched uncertain multi-input systems with several fixed state delays by using of LMI approach has been considered. A new combined sliding mode controller has been proposed and designed for the robust delay-dependent stabilization of uncertain time-delay systems with matched parameter perturbations and external disturbances. Delay-dependent robust global stability and delay-independent sliding mode existence conditions have been derived by using modified Lyapunov-Krasovskii functionals and formulated in terms of linear matrix inequality techniques. The allowable upper bounds on the time-delay are determined from the LMI stability conditions. These bounds are independent in different from existing ones of the parameter uncertainties and external disturbances.
Two numerical examples illustrated the effectiveness of the proposed design approach.

4.5.8 References

[1] Utkin, V. I, 1977,"Variable structure system with sliding modes", IEEE Transactions on Automatic Control, vol. 22, pp. 212-222.

[2] Sabanovic, A., Fridman, L. and Spurgeon, S. (Editors) 2004, "Variable Structure Systems: From Principles to Implementation", The Institution of Electrical Engineering, London.

[3] Perruquetti, W., and Barbot, J.P., 2002, "Sliding Mode Control in Engineering", Marcel Dekker, New York.

[4] Richard J.P., 2003, "Time-delay systems: an overview of some recent advances and open problems", Automatica, vol.39, pp.1667-1694.

[5] Young, K.K.O., Utkin, V. I. and Ü. Özgüner, 1999, "A control engineer's guide to sliding mode control", Tansactions on Control Systems Technology, vol.7 No.3, pp. 328-342.

[6] Spurgeon, S.K., 1991. "Choice of discontinuous control component for robust sliding mode performance", International Journal of Control, vol. 53, No 1, pp. 163-179.

[7] Choi, H.H., 2002, "Variable structure output feedback control design for a class of uncertain dynamic systems", Automatica, vol.38, pp. 335-341.

[8] Shyu, K.K., and J.J. Yan, 1993,"Robust stability of uncertain time-delay systems and it's stabilization by variable structure control" International Journal of Control, vol.57, pp.237-246.

[9] Koshkouei, J. and A. S. I. Zinober, 1996, "Sliding mode time-delay systems ", in Proc. IEEE International workshop on Variable Structure Control, Tokyo, Japan, pp. 97-101.

[10] Li, X. and R.A. De Carlo, 2003, "Robust sliding mode control of uncertain time-delay systems", International Journal of Control, vol. 76, No 1, pp.1296-1305.

[11] Gouisbaut, F., Dambrine, M. and Richard, J.P., 2002, "Robust control of delay systems: a sliding mode control design via LMI", Elsevier, Systems and Control Letters, vol.46, pp.219-230.

[12] Fridman, E., Gouisbaut, F., Dambrine, M. and Richard, J.P., 2003, "Sliding mode control of systems with time-varying delays via descriptor approach", International Journal of Systems Science, vol.34, No 8-9, pp.553-559.

[13] Cao, J., Zhong, S., and Hu, Y., 2007, "Novel delay-dependent stability conditions for a class of MIMO networked control systems with nonlinear perturbation", Applied Mathematics and Computation, Elsevier, doi: 10.1016/j pp.1-13.

Published by WSEAS Press
www.wseas.org
ISBN: 978-960-474-050-5
ISSN: 1790-5117

4.5.9 Appendix

A1

```
clear;
clc;

A0=[2 0 1; 1.75 0.25 0.8; -1 0 1]
A1=[-1 0 0; -0.1 0.25 0.2; -0.2 4 5]
B =[0;0;1]

%break
h1=1.0;
setlmis([]);
P=lmivar(1,[3 1]);

Geq=inv(B'*P*B)*B'*P
A0hat=A0-B*Geq*A0
A1hat=A1-B*Geq*A1
eigA0hat=eig(A0hat)
eigA1hat=eig(A1hat)
DesPol = [-2.7 -.8+.5i -.8-.5i];
G= place(A0hat,B,DesPol)
A0til=A0hat-B*G
eigA0til=eig(A0til)

R1=lmivar(1,[3 1]);
S1=lmivar(1,[3 1]);
T1=lmivar(1,[3 1]);
lmiterm([-1 1 1 P],1,1);
lmiterm([-1 2 2 R1],1,1);
lmiterm([-2 1 1 S1],1,1);
lmiterm([-3 1 1 T1],1,1);
lmiterm([4 1 1 P],(A0til+A1hat)',1,'s');
lmiterm([4 1 1 S1],h1,1);
lmiterm([4 1 1 R1],h1,1);
lmiterm([4 1 1 T1],1,1);
lmiterm([4 1 2 P],-1,A1hat*A0hat);
lmiterm([4 1 3 P],-1,A1hat*A1hat);
lmiterm([4 2 2 R1],-1/h1,1);
lmiterm([4 3 3 S1],-1/h1,1);
lmiterm([4 4 4 T1],-1,1);
LMISYS=getlmis;
[copt,xopt]=feasp(LMISYS);
P=dec2mat(LMISYS,xopt,P);
R1=dec2mat(LMISYS,xopt,R1);
S1=dec2mat(LMISYS,xopt,S1);
T1=dec2mat(LMISYS,xopt,T1);
evlmi=evallmi(LMISYS,xopt);
[lhs,rhs]=showlmi(evlmi,4);
lhs,h1,P,R1,S1,T1
eigsLHS=eig(lhs)

% repeat
clc;
Geq=inv(B'*P*B)*B'*P
A0hat=A0-B*Geq*A0
A1hat=A1-B*Geq*A1
eigA0hat=eig(A0hat)
eigA1hat=eig(A1hat)
G= place(A0hat,B,DesPol)
A0til=A0hat-B*G
eigA0til=eig(A0til)

setlmis([]);
P=lmivar(1,[3 1]);
R1=lmivar(1,[3 1]);
S1=lmivar(1,[3 1]);
T1=lmivar(1,[3 1]);
lmiterm([-1 1 1 P],1,1);
lmiterm([-1 2 2 R1],1,1);
lmiterm([-2 1 1 S1],1,1);
lmiterm([-3 1 1 T1],1,1);
lmiterm([4 1 1 P],(A0til+A1hat)',1,'s');
lmiterm([4 1 1 S1],h1,1);
lmiterm([4 1 1 R1],h1,1);
lmiterm([4 1 1 T1],1,1);
lmiterm([4 1 2 P],-1,A1hat*A0hat);
```


Published by WSEAS Press
www.wseas.org
ISBN: 978-960-474-050-5
ISSN: 1790-5117

```
lmiterm([4 1 3 P],-1,A1hat*A1hat);
lmiterm([4 2 2 R1],-1/h1,1);
lmiterm([4 3 3 S1],-1/h1,1);
lmiterm([4 4 4 T1],-1,1);
LMISYS=getlmis;
[copt,xopt]=feasp(LMISYS);
P=dec2mat(LMISYS,xopt,P);
R1=dec2mat(LMISYS,xopt,R1);
S1=dec2mat(LMISYS,xopt,S1);
T1=dec2mat(LMISYS,xopt,T1);
evlmi=evallmi(LMISYS,xopt);
[lhs,rhs]=showlmi(evlmi,4);
lhs,h1,P,R1,S1,T1
eigLHS=eig(lhs)
NormP=norm(P)
G
NormG = norm(G)
invBtPB=inv(B'*P*B)
BtP=B'*P
eigP=eig(P)
eigR1=eig(R1)
eigS1=eig(S1)
eigT1=eig(T1)
```

A2

```
clear; clc;
A0=[-4   0; -1  -3];
A1=[-1.5 0; -1  -0.5];
B =[ 2;  2];
h1=2.0000;
setlmis([]);
P=lmivar(1,[2 1]);
Geq=inv(B'*P*B)*B'*P
A0hat=A0-B*Geq*A0
A1hat=A1-B*Geq*A1
eigA0hat=eig(A0hat)
eigA1hat=eig(A1hat)
% DesPol = [-.8+.5i -.8-.5i]; G= place(A0hat,B,DesPol);
avec = [2 0.1];
G = avec;
A0til=A0hat-B*G1
eigA0til=eig(A0til)
R1=lmivar(1,[2 1]);
S1=lmivar(1,[2 1]);
T1=lmivar(1,[2 1]);
lmiterm([-1 1 1 P],1,1);
lmiterm([-1 2 2 R1],1,1);
lmiterm([-2 1 1 S1],1,1);
lmiterm([-3 1 1 T1],1,1);
lmiterm([4 1 1 P],(A0til+A1hat)',1,'s');
lmiterm([4 1 1 S1],h1,1);
lmiterm([4 1 1 R1],h1,1);
lmiterm([4 1 1 T1],1,1);
lmiterm([4 1 2 P],-1,A1hat*A0hat);
lmiterm([4 1 3 P],-1,A1hat*A1hat);
lmiterm([4 2 2 R1],-1/h1,1);
lmiterm([4 3 3 S1],-1/h1,1);
lmiterm([4 4 4 T1],-1,1);
LMISYS=getlmis;
[copt,xopt]=feasp(LMISYS);
P=dec2mat(LMISYS,xopt,P);
R1=dec2mat(LMISYS,xopt,R1);
S1=dec2mat(LMISYS,xopt,S1);
T1=dec2mat(LMISYS,xopt,T1);
evlmi=evallmi(LMISYS,xopt);
[lhs,rhs]=showlmi(evlmi,4);
lhs,h1,P,R1,S1,T1
eigsLHS=eig(lhs)

% repeat
Geq=inv(B'*P*B)*B'*P
A0hat=A0-B*Geq*A0
A1hat=A1-B*Geq*A1
eigA0hat=eig(A0hat)
eigA1hat=eig(A1hat)
G = avec;
A0til=A0hat-B*G
eigA0til=eig(A0til)
```


Published by WSEAS Press
www.wseas.org
ISBN: 978-960-474-050-5
ISSN: 1790-5117

```
setlmis([]);
P=lmivar(1,[2 1]);
R1=lmivar(1,[2 1]);
S1=lmivar(1,[2 1]);
T1=lmivar(1,[2 1]);
lmiterm([-1 1 1 P],1,1);
lmiterm([-1 2 2 R1],1,1);
lmiterm([-2 1 1 S1],1,1);
lmiterm([-3 1 1 T1],1,1);
lmiterm([4 1 1 P],(A0til+A1hat)',1,'s');
lmiterm([4 1 1 S1],h1,1);
lmiterm([4 1 1 R1],h1,1);
lmiterm([4 1 1 T1],1,1);
lmiterm([4 1 2 P],-1,A1hat*A0hat);
lmiterm([4 1 3 P],-1,A1hat*A1hat);
lmiterm([4 2 2 R1],-1/h1,1);
lmiterm([4 3 3 S1],-1/h1,1);
lmiterm([4 4 4 T1],-1,1);
LMISYS=getlmis;
[copt,xopt]=feasp(LMISYS);
P=dec2mat(LMISYS,xopt,P);
R1=dec2mat(LMISYS,xopt,R1);
S1=dec2mat(LMISYS,xopt,S1);
T1=dec2mat(LMISYS,xopt,T1);
evlmi=evallmi(LMISYS,xopt);
[lhs,rhs]=showlmi(evlmi,4);
lhs,h1,P,R1,S1,T1
eigsLHS=eig(lhs)
NormP=norm(P)
G
NormG = norm(G)
invBtPB=inv(B'*P*B)
BtP=B'*P
eigsP=eig(P)
eigsR1=eig(R1)
eigsS1=eig(S1)
eigsT1=eig(T1)
```


Published by WSEAS Press
www.wseas.org
ISBN: 978-960-474-050-5
ISSN: 1790-5117

CHAPTER 5

Sliding Mode Observers Design

In this chapter robust linear state observer, reduced-order sliding mode observer and time-delay observers for multivariable uncertain systems are systematically presented.

5.1 Robust improved state observer coupling schema design

In this section a robust improved state observer coupling schema is designed.

5.1.1 Introduction

In this section [1] a new robust decoupling state observer including an extra non-linear term has been proposed. This extra term is used to overcome the difficulty due to the unstructured parameter perturbation. It was highlighted that the nonlinear observer scheme requires the solution of a quadratic matrix inequality which is not straightforward. This inequality was rewritten as a quadratic Riccati equation by introducing a parameter ε which was successfully solved by proposed algorithms. However, the proposed observer possesses some shortages, for example, strictly speaking, the observer error dynamics is function of error, plant state and extra term and origin e=0 is not equilibrium point because plant state and extra term can increase unboundedly. Therefore, selected Lyapunov function is not a good candidate and observer state error does not go to zero.

In these comments, an improved simple linear Luenberger robust state observer for the linear MIMO systems with unstructured parameter perturbation is considered in light of design of coupling controller-observer scheme. The same observer problem mentioned above is solved only by using a simple linear Luenberger scheme without including any extra non-linear term. The simple linear Luenberger scheme is considered as a completely dual form to the linear multivariable controller and investigated together with controller. Then the design parameters of coupling closed-loop observer controller system are selected such that the observer error dynamics and plant state equations are globally asymptotically stable. The stability conditions are formulated in terms of two quadratic Riccati equations and one matrix inequality. Therefore, the coupling observer–controller laws can be constructed from the positive definite solutions of these algebraic Riccati equations and matrix inequality. Also the elegant reduced design methodology of completely symmetric dual coupling closed loop observer-controller system is presented.

5.1.2 Brief analysis of existing linear observers

In paper [1], a new robust decoupling state observer scheme including an extra non-linear term has been proposed. The purpose of a proposed non-linear state observer is to estimate the unavailable state variables of the linear MIMO systems with unstructured parameter perturbations. The main results of this paper which determines the construction of a Luenberger observer combined with extra non-linear term are given in the following theorem [1].

Theorem 1: Given a linear uncertain MIMO system with unstructured parameter perturbation

$$\dot{x}(t) = [A + \Delta A(\sigma)]x(t) + Bu(t)$$
$$y(t) = Cx(t) + Du(t) \tag{5.1.1}$$

where $x(t)$ is a state n-vector, $u(t)$ is a control m-vector, $y(t)$ is an output p-vector and $\|\Delta A(\sigma)\|_2 < \delta$, δ is constant, then the robust non-linear state observer:

$$\dot{\hat{x}}(t) = A\hat{x}(t) + Bu(t) + H[y(t) - \hat{y}(t)] + \alpha(\hat{x}(t), r(t))$$
$$\hat{y}(t) = C\hat{x}(t) + Du(t) \tag{5.1.2}$$

where $r(t)$ is the residual defined as follows

$$r(t) = y(t) - \hat{y}(t) = C[x(t) - \hat{x}(t)] = Ce(t) \tag{5.1.3}$$

estimates the unavailable state variables $x(t)$, or the observer state error equation:

Published by WSEAS Press
www.wseas.org
ISBN: 978-960-474-050-5
ISSN: 1790-5117

$$\dot{e}(t) = \dot{x}(t) - \dot{\hat{x}}(t) = (A - HC)e(t) + \Delta A(\sigma)x(t) - \alpha(\hat{x}(t), r(t) \quad (5.1.4)$$

converges to zero, if the following extra non-linear term using to overcome the difficulty due to unstructured parameter perturbations $\Delta A(\sigma)$ is satisfied:

$$\alpha(\hat{x}(t), r(t)) = \frac{\delta^2 \hat{x}^T(t)\hat{x}(t)}{2r^T(t)r(t)} P^{-1} C^T r(t) \quad (5.1.5)$$

where P is the symmetric positive-definite matrix of Lyapunov V-function

$$V(e(t)) = \frac{1}{2} e^T(t) P e(t) \quad (5.1.6)$$

and satisfies the following quadratic matrix inequality:

$$(A - HC)^T P + P(A - HC) + 2P^2 + \delta^2 I < 0 \quad (5.1.7)$$

where H is such that $A - HC$ is stable. It was highlighted that the nonlinear observer scheme requires the solution of a quadratic matrix inequality which is not straightforward. This inequality was rewritten as a quadratic Riccati equation by introducing a parameter ε which was successfully solved by proposed algorithms. For using design procedure of [2] to solving ARE in [1] has been assumed that [1] an unique positive definite solution P of quadratic Riccati equation exists if and only if the system matrix $\begin{bmatrix} A_0 - HC & \sqrt{2}I \\ \begin{bmatrix} \delta I \\ \varepsilon I \end{bmatrix} & 0 \end{bmatrix}$ is observable and controllable; H^∞ norm of this matrix transfer function is less then or equal to γ where $\gamma = \frac{1}{\sqrt{2}}$.

However, the proposed observer possesses some shortages:

1) Observer (2) involves an extra non-linear term (5) depending on estimated state variables, residual and their non-linear functions. Practical implementation of this non-linear term is difficult too.

2) Strictly speaking, the observer state variable $\hat{x}(t)$ can not be considered as the estimate of plant state variable $x(t)$ in (1) since as seen from (4) observer state error dynamics is function of $e(t)$, $x(t)$ and $\alpha(t)$, then origin $e = 0$ is not equilibrium point for (4), because of plant state variables $x(t)$, if they are unstable and extra term $\alpha(t)$ (5) can increase unboundedly as pointed in [1] also. Consequently, $e(t)$ does not go to zero as $t \to \infty$. For this reason we can conclude that the selected Lyapunov function (6) is not a good candidate. Therefore, the proposed non-linear robust state observer [1] needs to be improved. Moreover, observer for uncertain systems should be designed together with state controller because observer error equation (4) is dependent of $x(t)$, too. It should be noted that various coupling observer controller design for linear multivariable systems without parameter perturbations and closed-loop stability analysis are considered by several authors and presented for example in [3]. Recently, the new observer and coupling observer based controller are designed in the behavioral context by [4].

In this comments, a modification of improved simple linear Luenberger robust state observer design for the linear MIMO systems with parameter perturbation is considered. The same decoupling observer problem mentioned above is solved only by using a simple linear Luenberger scheme without including any extra non-linear term. The simple linear Luenberger scheme is considered as a completely dual form to the linear multivariable controller based on dual time-invariant observer concept [5] and investigated together with controller. Then the design parameters of coupling closed-loop observer controller system are selected such that the observer error dynamics and plant state equations are globally asymptotically stable. The stability conditions are formulated in terms of two quadratic Riccati equations and one matrix inequality, which can be successfully solved by using very well known algorithms [1], [2]. An elegant reduced design methodology of completely symmetric dual coupling closed loop observer-controller system is presented also.

5.1.3 Robust linear observer design method

Consider a linear uncertain MIMO system with parameter perturbation described by (1). Let us form a simple linear Luenberger observer as follows:

$$\begin{aligned} \dot{\hat{x}}(t) &= A\hat{x}(t) + Bu(t) - Bv(t) \\ \hat{y}(t) &= C\hat{x}(t) + Du(t) \end{aligned} \quad (5.1.8)$$

Published by WSEAS Press
www.wseas.org
ISBN: 978-960-474-050-5
ISSN: 1790-5117

where $v(t)$ is linear Luenberger compensative term which can be selected as follows:

$$\begin{aligned} v(t) &= -L(y(t)-\hat{y}(t)) = -Lr(t) \\ &\equiv -LCe(t) = -k_{OBS}B^T Re(t) \end{aligned} \tag{5.1.9}$$

where L is observer gain ($p \times p$) matrix in term of $r(t)$, k_{OBS} is constant gain parameter, R is the positive-definite matrix to be selected. Here we assumed that there exist a matrix R such that the structural constraint similar to [6], [7] is satisfied, $LC = k_{OBS}B^T R = K_{OBS}$, where K_{OBS} is observer gain ($p \times n$) matrix in term of $r(t)$. Note that this coupling observer scheme uses only the residual as input signal.

The dual linear control law is defined as:

$$u(t) = -G\hat{x}(t) = -k_{CON}B^T P\hat{x}(t) \tag{5.1.10}$$

where $G = k_{CON}B^T P, G$ the control gain matrix, k_{CON} is constant gain parameter and P is a positive definite matrix to be selected.

Then the observer error dynamics can be obtained as

$$\begin{aligned} \dot{e}(t) &= \dot{x}(t) - \dot{\hat{x}}(t) \\ &= Ae(t) + \Delta A(\sigma)x(t) + Bv(t) \\ &= \left[A - k_{OBS}BB^T R\right]e(t) + \Delta A(\sigma)x(t) \end{aligned} \tag{5.1.11}$$

and closed-loop system state equation (1) become

$$\begin{aligned} \dot{x}(t) &= Ax(t) + \Delta A(\sigma)x(t) - k_{CON}BB^T P\hat{x}(t) \\ &= Ax(t) + \Delta A(\sigma)x(t) - k_{CON}BB^T P[x(t) - e(t)] + k_{CON}BB^T Pe(t) \\ &= \left[A - k_{CON}BB^T P\right]x(t) + \Delta A(\sigma)x(t) \end{aligned} \tag{5.1.12}$$

Thus, the dual coupling closed-loop observer control system equations are presented as follows

$$\begin{bmatrix} \dot{e}(t) \\ \dot{x}(t) \end{bmatrix} = \begin{bmatrix} A - k_{OBS}BB^T R & \Delta A(\sigma) \\ k_{CON}BB^T P & A - k_{CON}BB^T P + \Delta A(\sigma) \end{bmatrix} \begin{bmatrix} e(t) \\ x(t) \end{bmatrix} \tag{5.1.13}$$

We assume that the pairs *(A,B)* and *(C,A)* are completely controllable and observable respectively. This implies that we can find the design parameters such that all eigenvalues of the matrices $A - k_{CON}BB^T P$ and $A - k_{OBS}BB^T R$ have a desired location in the left-half of s-plane. Moreover, we need some additional system structure conditions similar to in page 2 for solving algebraic Riccati equations.

The main results which determine the design parameters of the coupling observer-control construction are given in following theorem.

Theorem 2 : Given a linear uncertain MIMO system with control law (10) and simple linear Luenberger observer (8) with the dual compensative term (9), then the dual coupling closed-loop observer-control error system with unstructured parameter perturbation (13) is globally asymptotically stable, if the following conditions:

$$\begin{aligned} &PA + A^T P + 2\max_{\sigma} \Delta A^T(\sigma)\Delta A(\sigma) + P^2 \\ &- 2k_{CON}PBB^T P = -Q_{CON} \end{aligned} \tag{5.1.14}$$

$$RA + A^T R + R^2 - 2k_{OBS}RBB^T R = -Q_{OBS} \tag{5.1.15}$$

where Q_{CON} and Q_{OBS} are positive definite matrices and matrix inequality

$$H = \begin{bmatrix} Q_{OBS} & -k_{CON}PBB^T P \\ -k_{CON}PBB^T P & Q_{CON} \end{bmatrix} > 0 \tag{5.1.16a}$$

or Schur complement

$$H = Q_{OBS} - k_{CON}^2 PBB^T PQ_{CON}^{-1} PBB^T P > 0 \tag{5.1.16b}$$

are satisfied.

Proof: To examine the stability of dual coupling closed-loop observer-control system (13), we define a Lyapunov V-function candidate as a full quadratic form of e(t) and x(t):

$$V(x(t), e(t)) = \begin{bmatrix} e(t) \\ x(t) \end{bmatrix}^T \begin{bmatrix} R & 0 \\ 0 & P \end{bmatrix} \begin{bmatrix} e(t) \\ x(t) \end{bmatrix} = x^T(t)Px(t) + e^T(t)Re(t) \tag{5.1.17}$$

Published by WSEAS Press
www.wseas.org
ISBN: 978-960-474-050-5
ISSN: 1790-5117

where P and R are positive-definite matrices. The time-derivative of (17) along the closed-loop trajectories of (13) is given by:

$$\dot{V}(x(t),e(t)) = 2x^T(t)P(A - k_{CON}BB^TP)x(t) + 2x^T(t)P\Delta A(\sigma)x(t)$$
$$+ 2k_{CON}x^T(t)PBB^TPe(t) + 2e^T(t)R(A - k_{OBS}BB^TR)e(t) + 2e^T(t)R\Delta A(\sigma)x(t) \quad (5.1.18)$$

Since

$$2x^T(t)P\Delta A(\sigma)x(t) \le x^T(t)PP^Tx(t) + x^T(t)\Delta A^T(\sigma)\Delta A(\sigma)x(t) \quad (5.1.19)$$

$$2e^T(t)R\Delta A(\sigma)x(t) \le e^T(t)RR^Te(t) + x^T(t)\Delta A^T(\sigma)\Delta A(\sigma)x(t) \quad (5.1.20)$$

Then

$$\dot{V}(x(t),e(t)) \le x^T(t)(PA + A^TP)x(t)$$
$$- 2k_{CON}x^T(t)PBB^TPx(t) + x^T(t)PP^Tx(t) + x^T(t)\Delta A^T(\sigma)\Delta A(\sigma)x(t)$$
$$+ 2k_{CON}x^T(t)PBB^TPe(t) + e^T(t)(RA + A^TR)e(t) - 2k_{OBS}e^T(t)RBB^TRe(t) + e^T(t)RR^Te(t)$$
$$+ x^T(t)\Delta A^T(\sigma)\Delta A(\sigma)x(t)$$
$$= x^T(t)\left[PA + A^TP + 2\max_{\sigma}\Delta A^T(\sigma)\Delta A(\sigma) + P^2 - 2k_{CON}PBB^TP\right]x(t) + 2k_{CON}x^T(t)PBB^TPe(t)$$
$$+ e^T(t)\left[RA + A^TR + R^2 - 2k_{OBS}RBB^TR\right]e(t) \quad (5.1.21)$$

Letting

$$PA + A^TP + 2\max_{\sigma}\Delta A^T(\sigma)\Delta A(\sigma) + P^2 - 2k_{CON}PBB^TP = -Q_{CON} \quad (5.1.22)$$

$$RA + A^TR + R^2 - 2k_{OBS}RBB^TR = -Q_{OBS} \quad (5.1.23)$$

Then (21) leads to

$$\dot{V}(x(t),e(t)) \le -\begin{bmatrix} e(t) \\ x(t) \end{bmatrix}^T \begin{bmatrix} Q_{OBS} & -k_{CON}PBB^TP \\ -k_{CON}PBB^TP & Q_{CON} \end{bmatrix} \begin{bmatrix} e(t) \\ x(t) \end{bmatrix} = -\begin{bmatrix} e(t) \\ x(t) \end{bmatrix}^T H \begin{bmatrix} e(t) \\ x(t) \end{bmatrix} \quad (5.1.24)$$

In view of (24) if the conditions of (14), (15) and (16) are satisfied, then (24) reduces to $\dot{V}(x(t),e(t)) \le 0$. Therefore, the coupling closed-loop observer-control system with parameter perturbation is globally asymptotically stable, that is $x(t)$ and *e(t)* converge to zero. Theorem 2 is proved.

5.1.4 Solution of the quadratic Riccati equations algorithm

By using very well known solving algorithms for quadratic Riccati equations [1], [2]; our completely identical to [2], [1], [8] algebraic Riccati equations (22), (23) and matrix inequality can be solved as follows:

Step 1: Choose any positive definite matrices P, R and gain constants k_{CON}, k_{OBS} such that $A - K_{CON}BB^TP$ and $A - K_{OBS}BB^TR$ are stable. Initialize ε to some starting value, e.g. $\varepsilon = 1$.

Step 2: Determine whether the transformed similar to [1],[2]. Riccati equations (22), (23) have (for $\varepsilon Q_{CON}, \varepsilon Q_{OBS}$) some positive definite solutions for given Q_{CON} and Q_{OBS}. If positive definite solutions exist, the algorithm succeeds.

Step 3: Determine whether the already linear matrix inequality (16) for determined P, R, Q_{CON} and Q_{OBS} has a positive definite solution. If the solution exists go to Step 4. Otherwise, stop and the algorithm fails.

Step 4: $\varepsilon = \frac{\varepsilon}{2}$ if ε is less then some computational accuracy ε_0 then stop, the algorithm fails. Otherwise go to Step 3.

Step 5: the algorithm effectively succeeds and use (9), (10) to compute observer and controller gain matrices K_{OBS} and G.

Published by WSEAS Press
www.wseas.org
ISBN: 978-960-474-050-5
ISSN: 1790-5117

5.1.5 Reduced design

Letting in (17) $P=R$ and in (9), (10) $k_{OBS} = k_{CON} = k$, that is considered coupling observer-controller system is completely symmetric and dual form, then the stability conditions (14), (15) and (16) are reduced to:

$$PA + A^T P + 2\max_{\sigma} \Delta A^T(\sigma)\Delta A(\sigma) + P^2 - 2kPBB^T P = -Q,\ Q = Q^T > 0 \tag{5.1.25}$$

where $Q = Q_{CON}$ then $Q_{OBS} = Q + 2\max_{\sigma} \Delta A^T(\sigma)\Delta A(\sigma)$

$$H = \begin{bmatrix} Q + 2\max_{\sigma} \Delta A^T(\sigma)\Delta A(\sigma) & -kPBB^T P \\ -kPBB^T P & Q \end{bmatrix} > 0 \tag{5.1.26a}$$

or Schur complement

$$H = Q + 2\max_{\sigma} \Delta A^T(\sigma)\Delta A(\sigma) - k^2 PBB^T PQ^{-1} PBB^T P > 0 \tag{5.1.26b}$$

Therefore, the design procedure is simplified considerably.

5.1.6 Conclusion

We have considered a modification of improved simple linear Luenberger robust coupling state observer for the linear MIMO systems with parameter perturbation. Observer scheme is considered as a completely dual form to the linear multivariable controller and investigated together with controller**.** Then the design parameters of coupling closed-loop observer-controller system are selected such that the observer error dynamics and plant state equations are globally asymptotically stable. The stability conditions are formulated in terms of two quadratic Riccati equations and one matrix inequality, which can be solved by using effectively algorithms [1], [2]. Reduced design methodology of completely symmetric dual coupling closed loop observer-controller system is presented also.

5.2 A new reduced-order sliding mode observer design method: A triple transformations approach

In this section, a triple state and output variable transformations based method to design a new reduced-order sliding mode observer for perturbed MIMO systems is developed. The state and output variables of original system is triple transformed in to suitable canonical form coordinates where the dynamical reduced order observer can be successfully designed. Existing reduced-order observer design techniques and state-output variables transformations are summarized in this study and presented systematically. A new combined observer configuration is proposed. Some new adequate evolution of matrix inequalities is adopted. Global sufficient asymptotical stability and sliding conditions for the coupled observer error system are established by using Lyapunov full quadratic form and formulated in terms of Lyapunov matrix equations and matrix inequalities. Reduced analysis of separated reaching and sliding modes of motion of decoupled observer error system is discussed also. Two numerical examples are given to illustrate the usefulness of proposed design method.

5.2.1 Introduction

The observer for linear systems was first proposed and developed by Luenberger [9]. An observer that estimates all of the state variables is called a full-order observer. But, an observer, that estimates a part of the state variables referred to be a reduced-order observer.

In recent years, the state observation problem of uncertain dynamical systems subject to external disturbances has been a topic of considerable interest. Variable structure control with a sliding mode is an established method for control and observation of uncertain dynamical systems. There are several modification of discontinuous state observers which were successfully designed by Utkin [10]; Hashimoto, Utkin, Xu, Susuki and Harashima [11]; Walcott and Zak [12]; Edwards and Spurgeon [13]; Sira-Ramizer, Spurgeon and Zinober [14]; Young, Utkin and Özgüner [15]; Watanabe, Fukuda and Tzateftas [16]; Slotine, Hedrick and Misawa [17]; Mielczarski [18]; Jafarov [19] etc.

Published by WSEAS Press
www.wseas.org
ISBN: 978-960-474-050-5
ISSN: 1790-5117

Moreover, some new configuration of Utkin reduced-order observer for canonical systems without external disturbances, Walcott-Zak full-order observer for MIMO systems with external disturbances and Edwards and Spurgeon reduced order observer for canonical MIMO systems with external disturbance have been successfully designed by Edwards and Spurgeon [20]. The min-max observer control term with non-linear gain parameters is used for stabilization of observer error systems. These types of observers are designed by Lyapunov V-function method such that observer state error dynamics is globally asymptotically stable or globally uniformly ultimately bounded because some times the sliding and stability regions are restricted by some small ball [12]. Recent advances in design of sliding mode controllers and observers are presented by Jafarov and Tasaltin [55], [56]; Choi [57]; Yeh, Chien and Fu [58]; Singh, Steinberg and Page [59]; Sabanovic, Fridman and Spurgeon [60]; and special journal issues [61] and [62].

In this paper, a triple state and output variable transformations based method to design a new reduced-order sliding mode observer for perturbed MIMO systems is developed. The state and output variables of original system is triple transformed in to suitable canonical form coordinates where the dynamical reduced order observer can be successfully designed. Existing reduced-order observer design techniques and state-output variables transformations are summarized in this study and presented systematically. A new combined observer configuration is proposed. Some new adequate evolution of matrix inequalities is adopted. Global sufficient asymptotical stability and sliding conditions for the coupled observer error system are established by using Lyapunov full quadratic form and formulated in terms of Lyapunov matrix equations and matrix inequalities. Reduced analysis of separated reaching and sliding modes of motion of decoupled observer error system is discussed also. Two numerical examples are given to illustrate the usefulness of proposed design method.

Further, we will use the following notation:

$\|x\| = \sqrt{x^T x}$ is the Euclidean norm; $\|A\| = \sqrt{\lambda_{\max}(A^T A)}$ is matrix norm; T is the transpose of a vector or matrix; Rayleigh's min-max matrix inequality for a positive definite matrix P:

$0 < \lambda_{\min}(P)\|x\|^2 \le x^T P x \le \lambda_{\max}(P)\|x\|^2$;

where $\lambda_{\min}$ (P) and $\lambda_{\max}$ (P) are minimum and maximum eigenvalues of the matrix P, respectively.

5.2.2. Reduced-order observer configuration

5.2.2.1. System Description and Assumptions

Consider the original uncertain MIMO system described by the following state space equations:

$$\dot{x}(t) = A^o x(t) + B^o u(t) + f(t,x)$$

$$y(t) = C^o x(t) \qquad (5.2.1)$$

where $x \in R^n$ is an unmeasured state vector, $u \in R^m$ is a control input and $y \in R^p$ is a measured output vector with $m \le p < n$. Nominal linear system (A^o, B^o, C^o) is known and input and output matrices B^o and C^o are both of full rank and p = m.

We need to make the following conventional assumptions used in sliding mode control theory

a) The pair (A^o, B^o) is completely state controllable, that is

$$\text{rank}[\, B^o \vdots A^o B^o \vdots A^{o\,2} B^o \vdots \ldots \vdots A^{o(n-1)} B^o \,] = n \qquad (5.2.2)$$

and pair (A^o, C^o) is observable, respectively.

b) f(t,x) is the unknown n-vector function, which represents the system nonlinearities plus any model uncertainties and external disturbances, satisfies the conventional matching condition [12]:

$$f(t,x) = B^o \xi(t,x) \qquad (5.2.3)$$

where the function $\xi(t,x)$: $R_+ \times R^n \to R^m$ is unknown lumped function, but norm-bounded:

$$\|\xi(t,x)\| \le \rho + \mu \|y(t)\| \le \rho + \mu\sqrt{\lambda_{\max}(C^{0T}C^0)}\|x(t)\| \qquad (5.2.4)$$

where ρ and μ are given positive scalars.

Thus, the system (1) can be rewritten as

$$\dot{x}(t) = A^o x(t) + B^o [u(t) + \xi(t,x)]$$

Published by WSEAS Press
www.wseas.org
ISBN: 978-960-474-050-5
ISSN: 1790-5117

$$y(t)= C^o x(t) \tag{5.2.5}$$

The problem to be considered is that of reconstructing the unknown state variables x(t) using only measured output information y(t).
First we consider the system described by (5) under above mentioned assumptions that the pair (A^o, B^o) is controllable. As the outputs are to be considered, it is logical to effect a change of coordinates so that the outputs appear as components of the state coordinates.

5.2.2.2 Triple State Transformations

First transformation: Original system (5) can be transformed by the following similarity transformation [21]-[23]:

$$z=\begin{bmatrix} z_1 \\ z_2 \end{bmatrix} = T_1 x \tag{5.2.6}$$

into following conventional controllable canonical form:

$$\dot{z}_1 = A_{11}^1 z_1 + A_{12}^1 z_2 \tag{5.2.7}$$

$$\dot{z}_2 = A_{21}^1 z_1 + A_{22}^1 z_2 + B_2^1 (u+\xi) \tag{5.2.8}$$

$$y^1 = Fy = C_1 z_1 + C_2 z_2 \tag{5.2.9}$$

where

$$T^1 A^o T_1^{-1} = \begin{bmatrix} M \\ W \end{bmatrix} A^o [\, U \quad V \,] = \begin{bmatrix} MA^o U & MA^o V \\ WA^o U & WA^o V \end{bmatrix}$$

$$= \begin{bmatrix} A_{11}^1 & A_{12}^1 \\ A_{21}^1 & A_{22}^1 \end{bmatrix} = A^1 ;$$

$$T_1 B^o = \begin{bmatrix} M \\ W \end{bmatrix} B^o = \begin{bmatrix} MB^o \\ WB^0 \end{bmatrix} = \begin{bmatrix} 0 \\ B_2^1 \end{bmatrix} = B^1 ; \tag{5.2.10}$$

$$FC^0 T_1^{-1} = FC^o [\, U \quad V \,] = [\, FC^0 U \quad FC^0 V \,] = [\, C_1 \quad C_2 \,];$$

$$T_1 \, T_1^{-1} = \begin{bmatrix} M \\ W \end{bmatrix} [\, U \; V \,] = \begin{bmatrix} MU & MV \\ WU & WV \end{bmatrix} = \begin{bmatrix} I_{n-p} & 0 \\ 0 & I_p \end{bmatrix};$$

$$T_1^{-1} \, T_1 = [\, U \; V \,] \begin{bmatrix} M \\ W \end{bmatrix} = UM+VW = I_n$$

z_1 is a (n-p)-vector
z_2 is a p-vector
M is a (n-p)×n of full rank matrix
W is a p×n-matrix
U is a n×(n-p)-matrix
V is a n×p-matrix
B_2^1 is a p×p-matrix because p = m
C_1 is a design p×(n-p)-matrix
C_2 is a design p×p matrix of full rank and non-singular
I_n is a n×n-identity matrix.
F is an m×m-output design matrix satisfying structural constraint [12]:

$$C_2 = FC^o V = B_2^{1^T} P_2 \tag{5.2.11}$$

where P_2 is a positive definite ($p \times p$)-matrix to be selected.

Second Transformation: This state transformation is given by similar to [24]:

Published by WSEAS Press
www.wseas.org
ISBN: 978-960-474-050-5
ISSN: 1790-5117

$$T_2\begin{bmatrix} z_1 \\ z_2 \end{bmatrix}=\begin{bmatrix} x_1 \\ y^1 \end{bmatrix} \tag{5.2.12}$$

where x_1 is an unmeasured state (n-p) vector. This transformation leads system (7) – (9) to the following
controllable canonical form in space [x_1, y] :

$$\dot{x}_1 = A_{11}^2 x_1 + A_{12}^2 y^1$$
$$\dot{y}^1 = A_{21}^2 x_1 + A_{22}^2 y^1 + B_2^2 (u+\xi) \tag{5.2.13}$$

where

$$T_2 A^1 T_2^{-1} = \begin{bmatrix} A_{11}^2 & A_{12}^2 \\ A_{21}^2 & A_{22}^2 \end{bmatrix} = A^2 ;\ T_2 = \begin{bmatrix} I_{n-p} & 0 \\ C_1 & C_2 \end{bmatrix},$$

$$T_2 B^1 = \begin{bmatrix} I_{n-p} & 0 \\ C_1 & C_2 \end{bmatrix}\begin{bmatrix} 0 \\ B_2^1 \end{bmatrix} = \begin{bmatrix} 0 \\ C_2 B_2^1 \end{bmatrix} = \begin{bmatrix} 0 \\ B_2^2 \end{bmatrix} = B^2 ;\ (14)$$

where B_2^2 is a (p×p)-matrix.

Note that, T_2 is non-singular, because C_2 is a non-singular.

$$T_2^{-1} = \begin{bmatrix} I_{n-p} & 0 \\ -C_2^{-1} C_1 & C_2^{-1} \end{bmatrix},\ T_2\, T_2^{-1} = \begin{bmatrix} I_{n-p} & 0 \\ 0 & I_p \end{bmatrix} \tag{5.2.15}$$

$$[\ C_1 \quad C_2\ ]\, T_2^{-1} = [\ 0 \quad I_p\ ] \tag{5.2.16}$$

which are therefore correct.

Therefore, from (14)-(16) we calculate

$$T_2 A^1 T_2^{-1} = \begin{bmatrix} I_{n-p} & 0 \\ C_1 & C_2 \end{bmatrix}\begin{bmatrix} A_{11}^1 & A_{12}^1 \\ A_{21}^1 & A_{22}^1 \end{bmatrix}\begin{bmatrix} I_{n-p} & 0 \\ -C_2^{-1} C_1 & C_2^{-1} \end{bmatrix}$$

$$= \begin{bmatrix} I_{n-p} A_{11}^1 & I_{n-p} A_{12}^1 \\ C_1 A_{11}^1 + C_2 A_{21}^1 & C_1 A_{12}^1 + C_2 A_{22}^1 \end{bmatrix}\begin{bmatrix} I_{n-p} & 0 \\ -C_2^{-1} C_1 & C_2^{-1} \end{bmatrix}$$

$$= \begin{bmatrix} I_{n-p} A_{11}^1 I_{n-p} - I_{n-p} A_{12}^1 C_2^{-1} C_1 & I_{n-p} A_{12}^1 C_2^{-1} \\ (C_1 A_{11}^1 + C_2 A_{21}^1) I_{n-p} & (C_1 A_{12}^1 + C_2 A_{22}^1) C_2^{-1} \end{bmatrix}$$

$$= \begin{bmatrix} A_{11}^2 & A_{12}^2 \\ A_{21}^2 & A_{22}^2 \end{bmatrix} = A^2 \tag{5.2.17}$$

Hence

$$A_{11}^2 = A_{11}^1 - A_{12}^1 C_2^{-1} C_1 \tag{5.2.18}$$

and the design matrices C_1 or C_2 can be selected such that the matrix A_{11}^2 always has stable desirable eigenvalues.

In other words, in terms of the structural conditions the second transformation means that the following conversion is true. Indeed, from (9) we have

$$z_2 = -C_2^{-1} C_1 z_1 + C_2^{-1} y^1 \tag{5.2.19}$$

which acts in (7) as control input. Then

$$\dot{z}_1 = (A_{11}^1 - A_{12}^1 C_2^{-1} C_1) z_1 + A_{12}^1 C_2^{-1} y^1 \tag{5.2.20}$$

Therefore in terms of $[x_1\, y]$ we have the same results (13):

$$\dot{x}_1 = A_{11}^2 x_1 + A_{12}^2 y^1 \tag{5.2.21}$$

where A_{11}^2 always has stable desirable eigenvalues.

In order to verify the first and second transformations in terms of output equation let us evaluate the output variables in various state coordinates :

$$y^1(t) = Fy(t) = FC^o x(t) = C_1 z_1 + C_2 z_2$$

Published by WSEAS Press
www.wseas.org
ISBN: 978-960-474-050-5
ISSN: 1790-5117

$$\equiv [C_1 \quad C_2]\begin{bmatrix} z_1 \\ z_2 \end{bmatrix} \equiv [\, C_1 \quad C_2 \,]\, T_2^{-1}\begin{bmatrix} x_1 \\ y^1 \end{bmatrix}$$

$$= [\; C_1 \quad C_2 \;]\begin{bmatrix} I_{n-p} & 0 \\ -C_2^{-1}C_1 & C_2^{-1} \end{bmatrix}\begin{bmatrix} x_1 \\ y^1 \end{bmatrix}$$

$$=[\; 0 \quad I_p \;]\begin{bmatrix} x_1 \\ y^1 \end{bmatrix} \equiv y^1(t) \qquad (5.2.22)$$

Therefore, the first and second transformations are true.

Observer Configuration: Now, let us form a simple reduced order observer, structure of which is similar to the twice transformed system (13) but is different from [12] :

$$\dot{\hat{x}}_1 = A_{11}^2\hat{x}_1 + A_{12}^2\hat{y}^1$$

$$\dot{\hat{y}}^1 = A_{21}^2\hat{x}_1 + A_{22}^2\hat{y}^1 + B_2^2 u - B_2^2 v \qquad (5.2.23)$$

where $\hat{x}_1$ and $\hat{y}^1$ are the new state estimates vector of the observer; v is the observer control vector term to be selected.

If the error between the estimates and the true states are written as $e_1 = x_1 - \hat{x}_1$ and observer residual:

$$r(t) = y^1 - \hat{y}^1 \qquad (5.2.24)$$

then the following observer error system can be obtained from (13) and (13) as follows:

$$\dot{e}_1 = A_{11}^2 e_1 + A_{12}^2 r$$

$$\dot{r} = A_{21}^2 e_1 + A_{22}^2 r + B_2^2\, v + B_2^2 \xi \qquad (5.2.25)$$

Now, our goal is to construct an observer control term such that on the formed sliding surface defined for the error system (25) at the finite time generated is asymptotically stable sliding motion. Then the unmeasured reduced state $x_1(t)$ will be corrected by the observer. A remaining part $x_2(t)$ or $z_2(t)$ will be calculated from (19).

5.2.2.3 Observer control term

Let us select observer control term of the form:

$$v(t) = v_{lin}(t) + v_{vsc}(t)$$

$$= -Ls(t) - \left[\delta + k\left\|y^1(t)\right\|\right](B_2^{2T}P_2B_2^2)^{-1}\frac{s(t)}{\|s(t)\|} \qquad (5.2.26)$$

where L is an observer gain ($p \times p$)-matrix, δ and k are some scalars to be designed; $s(t)$ is the switching function to be defined. The observer combined control term (26) consists of two parts: 1) linear Luenberger control term $v_{lin}(t)$ for compensation of linear perturbation portion of error system (25); 2) variable structure control term $v_{vsc}(t)$ for compensation of lumped external disturbance.

The switching function can be defined as:

$$s(t) = B_2^{2^T} P_2 r(t) \qquad (5.2.27)$$

where P_2 is a (p×p)-positive definite design matrix to be determined; from (14), (10)

$$B_2^2 = C_2 B_2^1 = B_2^{1^T} P_2 B_2^1$$

$= B_2^{2^T} > 0$ is a positive definite (p×p)-matrix.

Third Transformation: Thus, we have constructed a reduced-order observer and control term (26) with the sliding surface $s(t) = 0$ (27) defined for the observer error system (25) in space of $[e_1 \;\; r]$. Now, on the formed sliding surface $s(t) = 0$ can be organized the stable sliding mode. For this reason, it is rational to transform the observer error system (25) into $[e_1 \;\; s]$ state-space form [25] by the third change of state and residual coordinates:

Published by WSEAS Press
www.wseas.org
ISBN: 978-960-474-050-5
ISSN: 1790-5117

$$T_3\begin{bmatrix} e_1 \\ r \end{bmatrix} = \begin{bmatrix} e_1 \\ s \end{bmatrix} \tag{5.2.28}$$

where

$$T_3 = \begin{bmatrix} I_{\text{n-p}} & 0 \\ 0 & B_2^{2^T} P_2 \end{bmatrix}. \tag{5.2.29}$$

Then, at last after triple coordinate transformations we obtain an observer error system in suitable canonical state-space form of $[\,e_1 \;\; s\,]$:

$$\dot{\mathrm{e}}_1 = A_{11}\mathrm{e}_1 + A_{12}s$$

$$\dot{s} = A_{21}e_1 + A_{22}s + B_2 v + B_2\xi \tag{5.2.30}$$

where

$$T_3 A^2 T_3^{-1} = \begin{bmatrix} A_{11} & A_{12} \\ \mathrm{A}_{21} & A_{22} \end{bmatrix} = A \;\; ; T_3\, B^2 = \begin{bmatrix} I_{\text{n-p}} & 0 \\ 0 & B_2^{2^T} P_2 \end{bmatrix}\begin{bmatrix} 0 \\ B_2^2 \end{bmatrix} = \begin{bmatrix} 0 \\ B_2^{2^T} P_2 B_2^2 \end{bmatrix} = \begin{bmatrix} 0 \\ B_2 \end{bmatrix} = B \tag{5.2.31}$$

$B_2 = B_2^{2^T} P_2 B_2^2 = B_2^{\,T} > 0$ is a positive definite matrix.

$$T_3^{-1} = \begin{bmatrix} I_{\text{n-p}} & 0 \\ 0 & \left(B_2^{2^T} P_2\right)^{-1} \end{bmatrix},\; T_3 T_3^{-1} = \begin{bmatrix} I_{n-p} & 0 \\ 0 & I_p \end{bmatrix} \tag{5.2.32}$$

Then, from (28) and (31) we calculate

$$T_3 A^2 T_3^{-1}$$

$$= \begin{bmatrix} I_{\text{n-p}} & 0 \\ 0 & B_2^{2^T} P_2 \end{bmatrix}\begin{bmatrix} A_{11}^2 & A_{12}^2 \\ \mathrm{A}_{21}^2 & A_{22}^2 \end{bmatrix}\begin{bmatrix} I_{\text{n-p}} & 0 \\ 0 & \left(B_2^{2^T} P_2\right)^{-1} \end{bmatrix}$$

$$= \begin{bmatrix} A_{11}^2 & A_{12}^2\left(B_2^{2^T} P_2\right)^{-1} \\ B_2^{2^T} P_2 \mathrm{A}_{21}^2 & B_2^{2^T} P_2 A_{22}^2\left(B_2^{2^T} P_2\right)^{-1} \end{bmatrix} = \begin{bmatrix} A_{11} & A_{12} \\ \mathrm{A}_{21} & A_{22} \end{bmatrix} = A \tag{5.2.33}$$

Hence we see that $A_{11} = A_{11}^2$ and therefore A_{11} has always stable desirable eigenvalues because of (17) and (18). Moreover

$$A_{21} = B_2^{2^T} P_2 A_{21}^2 = B_2^{2^T} P_2 (C_1 A_{11}^1 + C_2 A_{21}^1) \tag{5.2.34}$$

In particular, C_2 or C_1 can be selected such that

$$A_{21}^1 = -C_2^{-1} C_1 A_{11}^1 \text{ and } A_{21} = 0 \tag{5.2.35}$$

Thus, the reduced-order observer error system (30), (26) can be presented in the canonical state-space form of $[\,e_1 \;\; s\,]$:

$$\dot{e}_1(t) = A_{11}e_1(t) + A_{12}s(t) \tag{5.2.36}$$

$$\dot{s}(t) = A_{21}e_1(t) + \overline{A}_{22}s(t)$$
$$-\left[\delta + k\left\|y^1(t)\right\|\right]B_2(B_2^{2T}P_2B_2^2)^{-1}\frac{s(t)}{\left\|s(t)\right\|} + B_2\xi(t,x)$$

with sliding surface $s(t) = 0$ (5.2.37)

Published by WSEAS Press
www.wseas.org
ISBN: 978-960-474-050-5
ISSN: 1790-5117

where $\overline{A}_{22} = A_{22} - B_2 L$ is stable matrix. Desirable eigenvalues of which can be assigned by pole placement method.

5.2.3. Stability analysis of observer error system

The sufficient conditions for global asymptotical stability of the observer error system (36) at the point $\begin{bmatrix} e_1 \\ s \end{bmatrix}$=0 with a stable sliding mode on $s(t) = 0$ (37) are established by using Lyapunov V-function method and formulated in terms of Lyapunov matrix equations and matrix inequality. The following theorem summarizes our stability and sliding results.

Theorem 1: The coupling observer error system (36) is globally asymptotically stable and in general on the formed sliding surface $s(t) = 0$ (37) always is generated a stable sliding mode, whenever there exist a family of symmetric positive definite design matrices P_1, P_2 and Q_1, Q_2, Q such that the following conditions are satisfied:

$$P_1 A_{11} + A_{11}{}^T P_1 = -Q_1 ; \; Q_1 > 0 \tag{5.2.38}$$

$$P_2 \overline{A}_{22} + \overline{A}_{22}{}^T P_2 = -Q_2 ; \; Q_2 > 0 \tag{5.2.39}$$

$$Q = \begin{bmatrix} Q_1 & -(P_1 A_{12} + A_{21}^T P_2) \\ -(P_1 A_{12} + A_{21}^T P_2)^T & Q_2 \end{bmatrix} > 0 \tag{5.2.40a}$$

or its Schur complement :

$$Q = Q_1 - (P_1 A_{12} + A_{21}^T P_2) Q_2^{-1} (P_1 A_{12} + A_{21}^T P_2)^T > 0 \tag{5.2.40b}$$

$$\delta \lambda_{\min}(P_2) = \rho \lambda_{\max}(P_2 B_2) \tag{5.2.40c}$$

$$k \lambda_{\min}(P_2) = \mu \sqrt{\lambda_{\max}(F^{-T} F^{-1})} \lambda_{\max}(P_2 B_2) \tag{5.2.41}$$

Proof: Choose a Lyapunov full quadratic form of coordinates of $[\, e_1 \;\; s \,]$ as follows:

$$V(e_1, s) = \begin{bmatrix} e_1 \\ s \end{bmatrix}^T \begin{bmatrix} P_1 & 0 \\ 0 & P_2 \end{bmatrix} \begin{bmatrix} e_1 \\ s \end{bmatrix} = e_1^T P_1 e_1 + s^T P_2 s \tag{5.2.42}$$

where P_1 is a(n-p)×(n-p)-matrix, P_1 is p×p-matrix, which are positive definite. Then, the time derivative of (42) along the trajectory of the observer error system (36) can be calculated as follows:

$$\begin{aligned} \dot{V} &= -e_1^T Q_1 e_1 + 2 e_1^T P_1 A_{12} s - s^T Q_2 s + 2 e_1^T A_{21}^T P_2 s \\ &-2 s^T P_2 \left[\delta + k \left\| y^1(t) \right\| \right] B_2 (B_2^{2T} P_2 B_2^2)^{-1} \frac{s(t)}{\left\| s(t) \right\|} \\ &+2 s^T P_2 B_2 \xi(t, x) \end{aligned} \tag{5.2.43}$$

Since

$B_2 = B_2^{2T} P_2 B_2^2$ is a positive definite matrix, then we can present a feedback gain matrix in (26) also as:

$$\left[\begin{bmatrix} \delta_1 \cdots 0 \\ \vdots \;\; \ddots \;\; \vdots \\ 0 \;\; \cdots \;\; \delta_m \end{bmatrix} + \begin{bmatrix} k_1 \cdots 0 \\ \vdots \;\; \ddots \;\; \vdots \\ 0 \;\; \cdots \;\; k_m \end{bmatrix} \left\| y^1(t) \right\| \right] (B_2^{2T} P_2 B_2^2)^{-1} \tag{5.2.44}$$

where $\delta_1, \ldots, \delta_m$ and $k_1, \ldots, k_m$ are some gain constants to be selected.

Since, in space of $[\, e_1, y^1 \,]$:

Published by WSEAS Press
www.wseas.org
ISBN: 978-960-474-050-5
ISSN: 1790-5117

$$\|\xi(t,x)\| \le \rho + \mu\sqrt{\lambda_{\max}(F^{-T}F^{-1})}\|y^1(t)\| \tag{5.2.45}$$

and $$s^T sign(s) = \frac{s^T s}{\|s\|} = \frac{\|s\|^2}{\|s\|} = \|s\| \tag{5.2.46}$$

Then

$$-2s^T P_2\left[\delta + k\|y^1(t)\|\right]B_2(B_2^{2T}P_2B_2^2)^{-1}\frac{s(t)}{\|s(t)\|} \le -2\left[\delta + k\|y^1(t)\|\right]\lambda_{\min}(P_2)\|s\| \tag{5.2.47}$$

because

$$\left[\delta + k\|y^1(t)\|\right]\lambda_{\min}(P_2)\|s\|^2 \le s^T P_2\left[\delta + k\|y^1(t)\|\right]s \le \left[\delta + k\|y^1(t)\|\right]\lambda_{\max}(P_2)\|s\|^2 \tag{5.2.48}$$

Therefore (43) can be evaluated as:

$$\begin{aligned}\dot{V} &\le -e_1^T Q_1 e_1 + 2e_1^T\left(P_1A_{12} + A_{21}^T P_2\right)s - s^T Q_2 s \\ &- 2\left[\delta + k\|y^1(t)\|\right]\lambda_{\min}(P_2)\|s\| + 2\rho\lambda_{\max}(P_2B_2)\|s\| \\ &+ 2\mu\sqrt{\lambda_{\max}(F^{-T}F^{-1})}\lambda_{\max}(P_2B_2)\|s\|\|y^1(t)\|\end{aligned} \tag{5.2.49}$$

where P_2B_2 is a positive definite matrix.

Hence

$$\begin{aligned}\dot{V} &\le -\begin{bmatrix} e_1 \\ s\end{bmatrix}^T \begin{bmatrix} Q_1 & -(P_1A_{12} + A_{21}^T P_2) \\ -(P_1A_{12} + A_{21}^T P_2)^T & Q_2\end{bmatrix}\begin{bmatrix} e_1 \\ s\end{bmatrix} \\ &-2\left[\delta\lambda_{\min}(P_2) - \rho\lambda_{\max}(P_2B_2)\right]\|s\| \\ &-2\left[k\lambda_{\min}(P_2) - \mu\sqrt{\lambda_{\max}(F^{-T}F^{-1})}\lambda_{\max}(P_2B_2)\right]\|s\|\|y^1(t)\|\end{aligned} \tag{5.2.50}$$

In view of (50), if the sufficient conditions (38) - (41) are satisfied , then (50) reduces to

$$\dot{V} \le -\begin{bmatrix} e_1 \\ s\end{bmatrix}^T Q\begin{bmatrix} e_1 \\ s\end{bmatrix} \le 0 \tag{5.2.51}$$

for all $e_1(t) \ne 0, s(t) \ne 0$.

Therefore, we conclude that the reduced-order observer error system (36) is globally asymptotically stable and in general on the sliding surface $s(t) = 0$ (37) always is generated a stable sliding mode. The theorem is proved.

5.2.4. Reduced analysis of reaching and sliding modes of motion

In section 2.3 we have pointed that in particular the design parameters C_1 and C_2 can be selected such that $A_{21} = 0$. Then observer error system can be separated into two decoupled reaching and sliding modes. First, let us consider the sliding conditions for the separated observer error system.

Corollary 1: Suppose that $A_{21} = 0$ in (36) and conditions (38)-(41) of Theorem 1. Then sliding surface $s(t) = 0$ (37) is reached in finite time and on the sliding surface always is generated an asymptotically stable sliding mode.

Proof : Choose Lyapunov V-function candidate as

$$V_1(s) = s^T P_2 s \tag{5.2.52}$$

where P_2 is a positive definite matrix.

Then the time derivative of (52) along the trajectory of the second separated equation of observer error system (36) can be calculated as:

$$\begin{aligned}\dot{V}_1 &= -s^T Q_2 s - 2s^T P_2\left[\delta + k\|y^1(t)\|\right]B_2(B_2^{2T}P_2B_2^2)^{-1}\frac{s(t)}{\|s(t)\|} \\ &+2s^T P_2B_2\xi(t,x) \le -s^T Q_2 s - 2\left[\delta\lambda_{\min}(P_2) - \rho\lambda_{\max}(P_2B_2)\right]\|s\| \\ &-2\left[k\lambda_{\min}(P_2) - \mu\sqrt{\lambda_{\max}(F^{-T}F^{-1})}\lambda_{\max}(P_2B_2)\right]\|s\|\|y^1(t)\|\end{aligned} \tag{5.2.53}$$

In view of (53), if conditions (39), (40c) and (41) are satisfied then (53) reduces to:

$$\dot{V}_1 = 2s^T(t)P_2\dot{s}(t) \le -s^T Q_2 s < 0 \tag{5.2.54}$$

Published by WSEAS Press
www.wseas.org
ISBN: 978-960-474-050-5
ISSN: 1790-5117

Therefore, we conclude that an asymptotically stable sliding mode always is generated on the sliding surface $s(t)=0$ (37) defined for separated observer error system. The corollary is proved.

Now let us shortly analyze the separated modes. Since in sliding mode $s(t)=0$ and $s^T\dot{s}<0$. However, s(t) as control input is going to the first equation of observer error system (36). Therefore, at the reaching phase $0 \le t \le t_s$ this state error equation is affected by $s(t)$. In that reaching phase $s(t)$ is acted as first order dynamic regulator. But, when the sliding surface is reached the effect of dynamic regulator is disappeared and then more slowly state error dynamical process so-called a sliding mode is beginning. Consequently, from the first equation of separated observer error system (36) we can obtain a sliding mode motion as follows

$$\dot{e}_1(t) = A_{11}e_1(t) \tag{5.2.55}$$

where A_{11} is a stable matrix, desirable eigenvalues of which each can be assigned by pole placement method. Sliding mode is a slowly mode of motion. It should be noted that a stronger condition, guaranteeing an ideal sliding motion is the η-reachibility condition [12], [26]. For our multivariable case a η-reachibility condition can be rewritten as

$$s^T\dot{s} \le -\eta\|s\|^2 \tag{5.2.56}$$

where $\eta = \dfrac{\lambda_{\min}(Q_2)}{\lambda_{\max}(P)}$ is a positive constant. Then the sliding surface is rapidly reached at very small time, therefore the reaching time can be evaluated as:

$$t_s \le \frac{\|s(0)\|^2}{\eta} \tag{5.2.57}$$

Thus, there are two time-scale behavior [27] of motion:

1) reaching mode of motion and 2) sliding mode of motion.

Reaching mode is a fast mode of motion and can be determined by second equation of observer error system (36). Nominal part of reaching mode is described by equation :

$$\dot{s}(t) = (A_{22} - B_2L)s(t) \tag{5.2.58}$$

Desired characteristic equation of the closed-loop system (58) is given by

$$\phi(s) = \left|sI_p - A_{22} + B_2L\right| = s^p + \alpha_{p-1}s^{p-1} + \ldots + \alpha_1 s + \alpha_0 = 0 \tag{5.2.59}$$

where $\overline{A}_{22}$ is a stable matrix which can be selected by pole placement method for example by Ackerman's formula [28]. Pole placement procedure can be adopted to our problem as follows.

$$L = [0\ldots1][B_2 \quad A_{22}B_2\ldots A_{22}^{p-1}B_2 \quad]^{-1}\phi(A_{22}) \tag{5.2.60}$$

where $\phi(A_{22}) = A_{22}^p + \alpha_{p-1}A_{22} + \ldots + \alpha_1 A_{22} + \alpha_0 I_p$ (5.2.61)

5.2.5. Design Examples

Let us consider observer design examples to illustrate the usefulness of the developed reduced-order observer design method.

5.2.5.1. Numerical example: Consider a simple numerical example illustrating the design procedure. The second order system is given by

$$A^0 = \begin{bmatrix} -9 & 6 \\ -13 & 10 \end{bmatrix}, \quad B^0 = \begin{bmatrix} 1 \\ 3 \end{bmatrix}, \; C^0 = [-0.25 \; 0.25],$$

Suppose that $\mu = 0.2$, $\rho = 0.2$

$\left|\lambda I - A^0\right| = \lambda^2 - \lambda - 12 = 0$ then $\lambda_1 = 4$, $\lambda_2 = -3$. A^0 is unstable matrix.

Design procedure can be fulfilled by the following steps:

- Calculate

$$A^0B^0 = \begin{bmatrix} -9 & 6 \\ -13 & 10 \end{bmatrix}\begin{bmatrix} 1 \\ 3 \end{bmatrix} = \begin{bmatrix} 9 \\ 17 \end{bmatrix}$$

Published by WSEAS Press
www.wseas.org
ISBN: 978-960-474-050-5
ISSN: 1790-5117

$\left[B^0 \;\; A^0B^0\right] = \begin{bmatrix} 1 & 9 \\ 3 & 17 \end{bmatrix}$ determinant of which is different from zero, therefore, system is controllable.

- Suppose

$T_1 = \begin{bmatrix} 3 & -1 \\ -2 & 1 \end{bmatrix}$ then $T_1^{-1} = \begin{bmatrix} 1 & 1 \\ 2 & 3 \end{bmatrix}$, $T_1T_1^{-1} = \begin{bmatrix} 1 & 0 \\ 0 & 1 \end{bmatrix}$

- Calculate the first transformation

$$T_1 \; A_0T_1^{-1} = \begin{bmatrix} 3 & -1 \\ -2 & 1 \end{bmatrix}\begin{bmatrix} -9 & 6 \\ -13 & 10 \end{bmatrix}\begin{bmatrix} 1 & 1 \\ 2 & 3 \end{bmatrix}$$

$$= \begin{bmatrix} -14 & 8 \\ 5 & -2 \end{bmatrix}\begin{bmatrix} 11 \\ 23 \end{bmatrix} = \begin{bmatrix} 2 & 10 \\ 1 & -1 \end{bmatrix} = A^1$$

$$T_1 \; B^0 = \begin{bmatrix} 3 & -1 \\ -2 & 1 \end{bmatrix}\begin{bmatrix} 1 \\ 3 \end{bmatrix} = \begin{bmatrix} 0 \\ 1 \end{bmatrix} = B^1$$

From (10), (11):

$$FC^0T_1^{-1} = 1 \times \left[-0.25 \; 0.25\right]\begin{bmatrix} 1 & 1 \\ 2 & 3 \end{bmatrix} = \left[0.25 \; 0.5\right] = \left[C_1 \; C_2\right]$$

Let $P_2 = 0.5$ then $C_2 = B_2^{1T}P_2 = 1 \times 0.5 = 0.5$.

- Calculate the second transformation

$$T_2 = \begin{bmatrix} 1 & 0 \\ 0.25 & 0.5 \end{bmatrix}, T_2^{-1} = \begin{bmatrix} 1 & 0 \\ -0.5 & 2 \end{bmatrix}, \; T_2A^1T_2^{-1} = \begin{bmatrix} 1 & 0 \\ 0.25 & 0.5 \end{bmatrix}\begin{bmatrix} 2 & 10 \\ 1 & -1 \end{bmatrix}\begin{bmatrix} 1 & 0 \\ -0.5 & 2 \end{bmatrix}$$

$$T_2B^1 = \begin{bmatrix} 1 & 0 \\ 0.25 & 0.5 \end{bmatrix}\begin{bmatrix} 0 \\ 1 \end{bmatrix} = \begin{bmatrix} 0 \\ 0.5 \end{bmatrix} = B^2 \qquad = \begin{bmatrix} 2 & 10 \\ 1 & 2 \end{bmatrix}\begin{bmatrix} 1 & 0 \\ -0.5 & 2 \end{bmatrix} = \begin{bmatrix} -3 & 20 \\ 0 & 4 \end{bmatrix} = A^2$$

$A_{11}^2 = -3$ is stable.

- Calculate the third transformation

$B_2^{2T}P_2 = 0.5 \times 0.5 = 0.25$

Then

$$T_3 = \begin{bmatrix} 1 & 0 \\ 0 & 4 \end{bmatrix}, \quad T_3^{-1} = \begin{bmatrix} 1 & 0 \\ 0 & 0.25 \end{bmatrix}$$

$$T_3A^2T_3^{-1} = \begin{bmatrix} 1 & 0 \\ 0 & 4 \end{bmatrix}\begin{bmatrix} -3 & 20 \\ 0 & 4 \end{bmatrix}\begin{bmatrix} 1 & 0 \\ 0 & 0.25 \end{bmatrix} = \begin{bmatrix} -3 & 5 \\ 0 & 4 \end{bmatrix} = A$$

eig(A)= -3, 4

$$T_3B^2 = \begin{bmatrix} 1 & 0 \\ 0 & 4 \end{bmatrix}\begin{bmatrix} 0 \\ 0{,}5 \end{bmatrix} = \begin{bmatrix} 0 \\ 2 \end{bmatrix} = B$$

- Calculate the sliding and stability conditions

Let $Q_1 = 1 > 0$ then from (38) using MATLAB command P_1= Lyap(-3,1) =0.1667.

Using pole placement MATLAB command

L = Place(4,2,-2) = 3

Then from (36)

$\overline{A}_{22} = 4 - 2 \times 3 = 4 - 6 = -2 < 0$.

- From (39) $Q_2 = 1 > 0$.
- $P_1A_{12} = 0.1667 \times 5 = 0.8335$, $A_{21}{}^TP_2 = 0 \times 0.5 = 0$

  $P_2B_2 = 0.5 \times 2 = 1$; $\mu = 0.1$

Then from (40) $Q = \begin{bmatrix} 1 & -0.8335 \\ -0.8335 & 1 \end{bmatrix} > 0$ because determinant of which is 0.3053.

- Let $\rho = 0.2$ then from (41) gain parameter $k = 0{,}4$.

Thus we have determined all the design parameters

Published by WSEAS Press
www.wseas.org
ISBN: 978-960-474-050-5
ISSN: 1790-5117

of the second order observer.

5.2.5.2 Observer design example for AV-8A aircraft: Now, let us consider more complex observer design example for lateral dynamics of the AV-8A Harrier aircraft in hovering flight. The nominal parameters of this aircraft are taken from [29]:

$$\dot{x}(t) = A^0 x(t) + B^0 u(t)$$
$$y(t) = C^0 x(t)$$

where the state vector is represented by

$x^T = [\psi \ \phi \ \upsilon \ \mathrm{r} \ \mathrm{p}]$,

ψ is the Euler yaw attitude perturbation (rad)

ϕ is the Euler roll attitude perturbation (rad)

υ is the velocity perturbation along body y axis(m/s)

r is the body-axis yaw rate (rad/s)

p is the body-axis roll rate (rad/s);

The control inputs are $u^T = [\delta_{LAT} \ \ \delta_{RUD}]$,

δ_{LAT} is the lateral stick perturbation (cm)

δ_{RUD} is the rudder pedal perturbation (cm)

The system, control and output matrices are

$$A^0 = \begin{bmatrix} 0 & 0 & 0 & 1 & 0 \\ 0 & 0 & 0 & 0 & 1 \\ 0 & 9.8 & -0.042 & 0 & 0 \\ 0 & 0 & -0.007 & -0.06 & -0.075 \\ 0 & 0 & -0.039 & 0.11 & -0.260 \end{bmatrix}, \ B^0 = \begin{bmatrix} 0 & 0 \\ 0 & 0 \\ 0 & -0.270 \\ 0.0055 & 0.085 \\ 0.177 & -0.033 \end{bmatrix}, C^0 = \begin{bmatrix} 1 & 1 & 0 & 1 & 1 \\ 1 & 1 & 1 & 0 & 1 \end{bmatrix}$$

For the simulation, the parameter perturbations are accepted as follows: $\Delta A_0 = 0.2\sin(t) A_0$.

Design procedure of sliding mode observer can be carried out by the following steps:

- Eig(A^0): $\lambda_1 = 0, \lambda_{2,3} = 0.2715 \mp 0.6239\mathrm{i}$, $\lambda_4 = -0.8253$, $\lambda_5 = -0.0798$; A^0 is unstable.
- CONM = $\begin{bmatrix} 0 & 0 & 0.0055 & 0.0850 & -0.0136 & -0.0007 & 0.0042 & -0.0022 & -0.0132 & 0.0030 \\ 0 & 0 & 0.1770 & -0.0330 & -0.0454 & 0.0285 & 0.0103 & -0.0079 & -0.0699 & 0.0145 \\ 0 & -0.2700 & 0 & 0.0113 & 1.7346 & -0.3239 & -0.5179 & 0.2925 & 0.1228 & -0.0899 \\ 0.0055 & 0.0850 & -0.0136 & -0.0007 & 0.0042 & -0.0022 & -0.0132 & 0.0030 & 0.0097 & -0.0033 \\ 0.1770 & -0.0330 & -0.0454 & 0.0285 & 0.0103 & -0.0079 & -0.0699 & 0.0145 & 0.0369 & -0.0148 \end{bmatrix}$

rank CONM=5

- OBSM = $\begin{bmatrix} 1 & 1 & 0 & 1 & 1 \\ 1 & 1 & 1 & 0 & 1 \\ 0 & 0 & -0.0460 & 1.0500 & 0.6650 \\ 0 & 9.8000 & -0.0810 & 1.1100 & 0.7400 \\ 0 & -0.4508 & -0.0314 & 0.0102 & -0.2517 \\ 0 & -0.7938 & -0.0332 & 0.0148 & 9.5244 \\ 0 & -0.3073 & 0.0111 & -0.0283 & -0.3861 \\ 0 & -0.3256 & -0.3702 & 1.0468 & -3.2712 \\ 0 & 0.1084 & 0.0148 & -0.0408 & -0.2047 \\ 0 & -3.6275 & 0.1358 & -0.4226 & 0.4464 \end{bmatrix}$

rank(OBSM)=5

Published by WSEAS Press
www.wseas.org
ISBN: 978-960-474-050-5
ISSN: 1790-5117

- T_1 is selected such that

$$T_1 = \begin{bmatrix} 0.2000 & 0 & 0.3124 & 0.9805 & -0.0305 \\ 0.1000 & 0.3000 & 0.1650 & 0.5179 & -0.0161 \\ 0.2000 & 0.4000 & 0.2650 & 0.8317 & -0.0258 \\ -0.6000 & 0.7000 & 10.0000 & 0.8000 & -9.0000 \\ -0.4000 & 0.5000 & 0.6000 & 0.4000 & 1.0000 \end{bmatrix}, \; M = \begin{bmatrix} 0.2000 & 0 & 0.3124 & 0.9805 & -0.0305 \\ 0.1000 & 0.3000 & 0.1650 & 0.5179 & -0.0161 \\ 0.2000 & 0.4000 & 0.2650 & 0.8317 & -0.0258 \end{bmatrix}$$

$$W = \begin{bmatrix} -0.6000 & 0.7000 & 10.0000 & 0.8000 & -9.0000 \\ -0.4000 & 0.5000 & 0.6000 & 0.4000 & 1.0000 \end{bmatrix}, \; T_1^{-1} = \begin{bmatrix} -3.7997 & -35.1805 & 26.3872 & 0.0000 & -0.0014 \\ -1.8321 & 2.6719 & 0.4961 & 0.0000 & -0.0000 \\ -1.0156 & -13.6897 & 9.3471 & 0.0718 & 0.6357 \\ 2.0927 & 11.1749 & -8.1134 & -0.0239 & -0.1808 \\ -0.8316 & -11.6643 & 7.9439 & -0.0335 & 0.6903 \end{bmatrix}$$

$$U = \begin{bmatrix} -3.7997 & -35.1805 & 26.3872 \\ -1.8321 & 2.6719 & 0.4961 \\ -1.0156 & -13.6897 & 9.3471 \\ 2.0927 & 11.1749 & -8.1134 \\ -0.8316 & -11.6643 & 7.9439 \end{bmatrix}, \; V = \begin{bmatrix} 0.0000 & -0.0014 \\ 0.0000 & -0.0000 \\ 0.0718 & 0.6357 \\ -0.0239 & -0.1808 \\ -0.0335 & 0.6903 \end{bmatrix}$$

- $F = \begin{bmatrix} 10.1189 & -4.1738 \\ 16.5545 & -6.9400 \end{bmatrix}, P_2 = \begin{bmatrix} 0.6250 & -0.0000 \\ -0.0000 & 0.6250 \end{bmatrix}$
- $C_1 = FC^0U = \begin{bmatrix} -13.0114 & -92.3955 & 85.9390 \\ -20.4517 & -144.6984 & 135.66399 \end{bmatrix}$
- $C_2 = FC^0V = B_2^{1T} P_2 = \begin{bmatrix} -0.7405 & -0.3870 \\ -1.2158 & -0.7810 \end{bmatrix}$
- $B_2^1 = \begin{bmatrix} -1.5886 & -2.3350 \\ 0.1792 & -0.1610 \end{bmatrix}$

$$T_1B^0 = \begin{bmatrix} -0.0000 & 0.0000 \\ -0.0000 & 0.0000 \\ 0.0000 & -0.0000 \\ -1.5886 & -2.3350 \\ 0.1792 & -0.1610 \end{bmatrix} \; A^1 = T_1A^0T_1^{-1} = \begin{bmatrix} -5.2470 & 10.7427 & -0.2962 & -0.0024 & -0.0822 \\ -3.0326 & 2.1118 & 2.2724 & -0.0112 & 0.1647 \\ -4.7200 & 4.7864 & 2.6799 & -0.0162 & 0.2009 \\ -185.3765 & 209.8028 & 84.8841 & -0.0657 & 2.3030 \\ -11.5365 & 10.6695 & 6.5067 & -0.0043 & 0.1590 \end{bmatrix}$$

- From (14)

$$T_2 = \begin{bmatrix} 1.0000 & 0 & 0 & 0 & 0 \\ 0 & 1.0000 & 0 & 0 & 0 \\ 0 & 0 & 1.0000 & 0 & 0 \\ -13.0114 & -92.3955 & 85.9390 & -0.7405 & -0.3870 \\ -20.4517 & -144.6984 & 135.6639 & -1.2158 & -0.7810 \end{bmatrix}, \; T_2^{-1} = \begin{bmatrix} 1.0000 & 0 & 0 & 0 & 0 \\ 0 & 1.0000 & 0 & 0 & 0 \\ 0 & 0 & 1.0000 & 0 & 0 \\ -20.8355 & -149.8591 & 135.5236 & -7.2401 & 3.5874 \\ 6.2486 & 48.0158 & -37.2672 & 11.2708 & -6.8650 \end{bmatrix}$$

$$A^2 = T_2A^1T_2^{-1} = \begin{bmatrix} -5.7101 & 7.1587 & 2.4388 & -0.9093 & 0.5559 \\ -1.7702 & 11.6974 & -5.3826 & 1.9372 & -1.1707 \\ -3.1275 & 16.8576 & -7.0000 & 2.3812 & -1.4371 \\ 98.7361 & 22.9175 & -128.6972 & 17.2054 & -10.2540 \\ 163.0244 & 31.6832 & -208.7187 & 27.7767 & -16.5546 \end{bmatrix}, \; A_{11}^2 = \begin{bmatrix} -5.7101 & 7.1587 & 2.4388 \\ -1.7702 & 11.6974 & -5.3826 \\ -3.1275 & 16.8576 & -7.0000 \end{bmatrix}$$

- Eigenvalues of ${A_{11}}^2$

$\lambda_1 = -0.9992$

$\lambda_1 = -0.0068 + 1.5225i$

$\lambda_3 = -0.0068 - 1.5225i$

$$B_2^2 = C_2B_2^1 = \begin{bmatrix} 1.1071 & 1.7915 \\ 1.7915 & 2.9646 \end{bmatrix}$$

Published by WSEAS Press
www.wseas.org
ISBN: 978-960-474-050-5
ISSN: 1790-5117

- Eigen values of P_2: $\lambda_1 = 0.2$ $\lambda_2 = 0.8$

$$B_2^{2^T} P_2 = \begin{bmatrix} 1.0910 & 1.2279 \\ 1.7851 & 2.0198 \end{bmatrix},\ B_2 = B_2^{2^T} P_2 B_2^2 = \begin{bmatrix} 3.4075 & 5.5946 \\ 5.5946 & 9.1858 \end{bmatrix},\ B_2^{-1} = \begin{bmatrix} 10855 & -6611 \\ -6611 & 4026 \end{bmatrix}$$

- $$T_3 = \begin{bmatrix} 1.0000 & 0 & 0 & 0 & 0 \\ 0 & 1.0000 & 0 & 0 & 0 \\ 0 & 0 & 1.0000 & 0 & 0 \\ 0 & 0 & 0 & 1.0910 & 1.2279 \\ 0 & 0 & 0 & 1.7851 & 2.0198 \end{bmatrix} T_3^{-1} = \begin{bmatrix} 1.0000 & 0 & 0 & 0 & 0 \\ 0 & 1.0000 & 0 & 0 & 0 \\ 0 & 0 & 1.0000 & 0 & 0 \\ 0 & 0 & 0 & 173.5745 & -105.5198 \\ 0 & 0 & 0 & -153.4105 & 93.7567 \end{bmatrix}$$

- $$A = T_3 A_2^2 T_3^{-1} = \begin{bmatrix} -5.7 & 7168 & 2.4 & -243 & 148 \\ -1.8 & 11.6 & 5.38 & 516 & -314 \\ -3.1 & 16.85 & -7 & 634 & -386 \\ 307.8 & 63.9 & 396.7 & 14012 & -8534 \\ 505.5 & 105 & -651 & 23007 & -14012 \end{bmatrix},\ A_{11} = \begin{bmatrix} -5.7 & 7168 & 2.4 \\ -1.8 & 11.6 & 5.38 \\ -3.1 & 16.85 & -7 \end{bmatrix}$$

- Eigenvalues of A_{11} :

$\lambda_1 = -0.9992$

$\lambda_1 = -0.0068 + 1.5225i$

$\lambda_3 = -0.0068 - 1.5225i$

which are stable.

$$A_{22} = \begin{bmatrix} 14012 & -8534 \\ 23007 & -14012 \end{bmatrix}$$

Eigenvalues of A_{22} $\lambda_{1,2} = 0.6605,\ -0.0097$ are unstable.

- Solving Lyapunov equation (38) by Matlab Lyap(a11,Q1) command

$$P_1 = \begin{bmatrix} 3114 & 32471 & 52463 \\ 32471 & 18119 & 28699 \\ 52463 & 28699 & 45673 \end{bmatrix}$$

where determinant is 1.1031e+008.

$$Q_1 = \begin{bmatrix} 1 & 0 & 0 \\ 0 & 1 & 0 \\ 0 & 0 & 1 \end{bmatrix}$$

- Using pole placement for (37) with desired poles $-0.8 \mp 0.1i$ then
- L=place(A22,B2,desired_poles)=$\begin{bmatrix} 13886 & -6969 \\ -5953 & 2719 \end{bmatrix}$

$$\overline{A}_{22} = \begin{bmatrix} -0.8000 & -0.1000 \\ 0.1000 & -0.8000 \end{bmatrix}$$

- Solving Lyapunov equation (39)

$$P_2 = \begin{bmatrix} 0.6250 & -0.0000 \\ -0.0000 & 0.6250 \end{bmatrix}$$

where the determinant is 0.3906.

$$Q_2 = \begin{bmatrix} 1 & 0 \\ 0 & 1 \end{bmatrix},\ A_{12} = \begin{bmatrix} -243.1087 & 148.0664 \\ 515.8387 & -314.1695 \\ 633.7755 & -385.9977 \end{bmatrix},\ A_{21} = \begin{bmatrix} 307.8891 & 63.9048 & -396.6819 \\ 505.5256 & 104.9028 & -651.3012 \end{bmatrix}$$

$\lambda_{\max}(P_2 B_2) = 7.8708$, $\mu = 0.2$

- Calculate Q from (40a) :

Published by WSEAS Press
www.wseas.org
ISBN: 978-960-474-050-5
ISSN: 1790-5117

$$Q = \begin{bmatrix} 1 & 0 & 0 & -34655984 & 21106489 \\ 0 & 1 & 0 & -19641359 & 11962315 \\ 0 & 1 & 0 & -30995700 & 18878225 \\ -34655984 & -19641359 & -30995700 & 1 & 0 \\ 21106489 & 11962315 & 18878225 & 0 & 1 \end{bmatrix}$$

which is positive definite.

- Calculate δ from (40c)

$\delta = 1.5742$

- Calculate k from (41)

$$F^{-1} = \begin{bmatrix} 6.1423 & -3.6941 \\ 14.6517 & -8.9558 \end{bmatrix}$$

$\lambda_{\max}(F^{-1T}F^{-1}) = 346.2510$, $\lambda_{\max}(P_2B_2) = 7.8708$

$k = 146.4576$

5.2.5.3. Simulation results: A new configuration of a reduced sliding mode observer (23), (26) for perturbed system (5) with parameters of Example 2 is shown in Figure 1. This system is simulated by using MATLAB-SIMULINK program. Simulation results are presented in Fig. 2. The sliding mode observer estimates the state vector satisfactorily.

5.2.6 Conclusions

In this section, a triple state and output variable transformations based method to design a new reduced-order sliding mode observer for perturbed MIMO systems is developed. The state and output variables of original system is triple transformed in to suitable canonical form coordinates where the dynamical reduced order observer can be successfully designed. Existing reduced-order observer design techniques and state-output variables transformations are summarized in this study and presented systematically. A new combined observer configuration is proposed. Some new adequate evolution of matrix inequalities is adopted. Global sufficient asymptotical stability and sliding conditions for the coupled observer error system are established by using Lyapunov full quadratic form and formulated in terms of Lyapunov matrix equations and matrix inequalities. Reduced analysis of separated reaching and sliding modes of motion of decoupled observer error system is discussed also. Two numerical examples are given to illustrate the usefulness of proposed design method.

Published by WSEAS Press
www.wseas.org
ISBN: 978-960-474-050-5
ISSN: 1790-5117

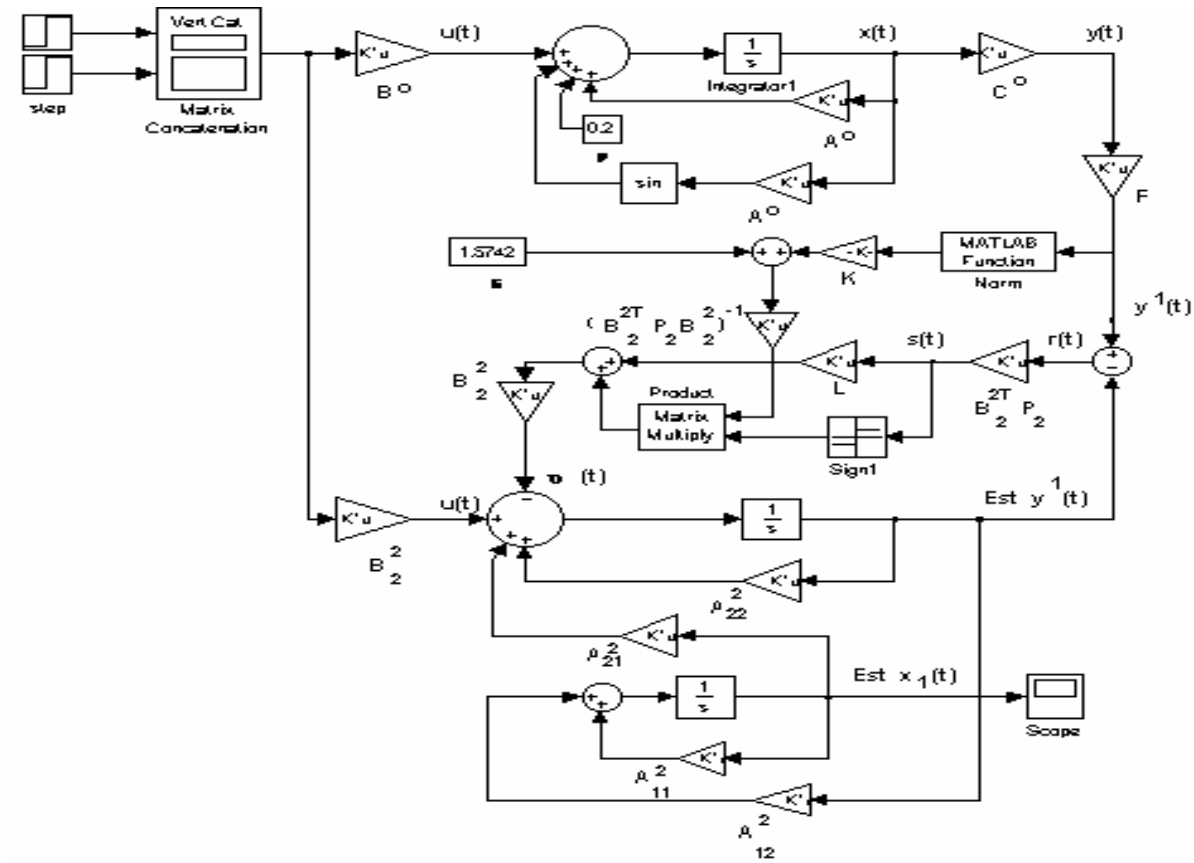

Figure 1. A new configuration of reduced order observer system

Figure 2. Output variable $y^1(t)$

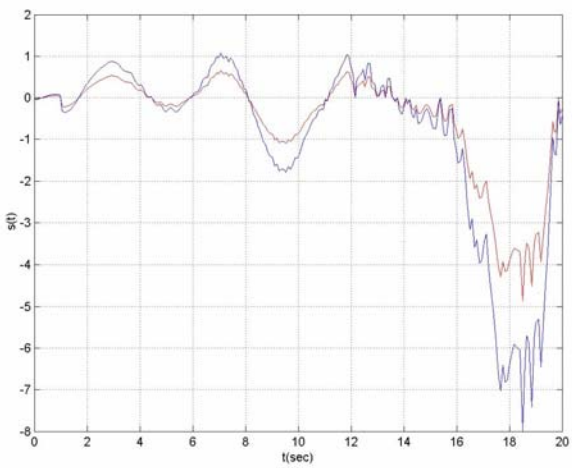

Figure 3. Estimated output variable $\hat{y}^1(t)$

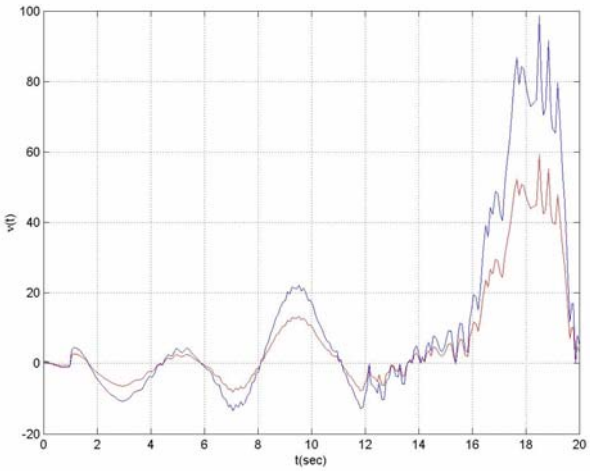

Figure 4. Switching function $s(t)$

Figure 5. Control term $v(t)$

Published by WSEAS Press
www.wseas.org
ISBN: 978-960-474-050-5
ISSN: 1790-5117

5.3 Design modification of sliding mode observers for uncertain MIMO systems without and with time-delay

In this paragraph, the sliding mode observers design techniques for MIMO and as a simple example for SISO systems are systematically advanced as a first purpose. Design parameters are selected such that on the defined switching surface always is generated asymptotically stable sliding mode. Moreover, observer state error dynamics is globally robustly asymptotically stable. Then, advanced design techniques are generalized to the design of a new modification of sliding mode observers for uncertain MIMO systems with time-delay. Robust sliding and global asymptotic stability conditions are derived by using Lyapunov-Krasovskii V-functional method. By these conditions observer parameters are designed such that an asymptotically stable sliding mode always is generated in observer and observer state error dynamics is robustly globally asymptotically stable. The main results are formulated in terms of Lyapunov matrix equations and inequalities. Design example for AV-8A Harrier VTOL aircraft with simulation results using MATLAB show the effectiveness of proposed design approaches.

5.3.1. Introduction

The purpose of a state observer is to estimate the unavailable state variables of a plant. The idea of using a dynamical linear system to generate estimates of the plant states can be traced to Luenberger (1971) [9], which is the most well known. The Luenberger observer performs well when the plant dynamics are known reasonable well. A full-order observer design method for linear systems with unknown inputs is given by Darouach, Zasadzinski and Xu (1994) [31]. However, in the presence of model perturbations and external disturbances, the estimation of the plant states of uncertain time-delay systems may not be sufficiently accurate. From the point of view of robust control, the desirable properties and functional possibilities of variable structure control are very well known (Utkin, 1992 [49]; De Carlo, Zak and Matthews, 1988 [32]; Oh and Khalil, 1995 [44]; Edwards and Spurgeon, 1998 [33]; Edwards and Spurgeon, 2000 [64]; Edwards, Spurgeon and Hebden, 2003 [65]; Yan, Edwards and Spurgeon, 2004 [74]; Garofalo and Glielmo, 1996 [37]; Jafarov, 2000 [55]; Choi, 2004 [57]; Cao and Xu, 2004 [63]; etc.).

In recent years, the sliding mode observer design problem for uncertain dynamical systems subject to external disturbances has been a topic of considerable interest of several authors. There are several modification of discontinuous state observers which were successfully designed by Utkin (1981) [48], Walcott and Zak (1988) [50], Walcott, Corless and Zak (1987) [51], Zak, Walcott and Hui (1993) [54], Edwards and Spurgeon (1994, 1996, 1998) [35]-[33], Slotine, Hedrick and Misawa (1987) [17], Watanabe, Fukuda and Tzafestas (1992) [16], Hachimoto, Utkin, Xu, Suzuki and Harashima (1990) [11] and et al. Lyapunov V-function method [42] has been used to formulate sliding mode observers design which guarantees that the state estimation errors converge to zero asymptotically in the presence of matched uncertainties. In other words, this type of discontinuous observers is designed such that observer state error dynamics is globally asymptotically stable or globally uniformly ultimately bounded because the stability region is restricted by some small ball. However, first question arises as to whether these types of observers provide an asymptotically stable sliding mode or not because its robustness directly is related with the sliding mode. Secondly, could we generalize the design of sliding mode observers for uncertain multivariable systems with time-delay?

It should be noted that in contrast to above mentioned observers, there is a few linear and variable structure observers for time delay systems (Pearson and Fiagbedzi, 1989 [45]; Fattouh, Sename and Dion, 1999 [36]; Wang and Unbehauen, 2000 [52]; Wang, Lam and Burnham, 2002 [53]; Jafarov, 1999 [40], 2002 [39], etc.) by using Lyapunov-Krasovskii functionals [41]. Razumikhin-Hale type theorem (Razumikin, 1956 [46]; Hale and Verduyn-Lunel, 1993) is used for example by (Mahmoud and Muthairi, 1994 [43]; Shyu and Yan, 1993 [47]) for control of time-delay systems. Recent advances in analysis and control of time-delay systems using Lyapunov-Krasovskii functionals are presented by Gu, Kharitonov and Chen, 2003 [67]; Niculescu, 2002 [72]; Richard, 2003 [73]; Fridman and Shaked, 2003 [66]; Jafarov, 2003 [39]; Jing, Tan and Wang, 2004 [71]; etc.

In this paper sliding mode observers design techniques for MIMO and as a simple example for SISO systems are systematically advanced as a first purpose. Design parameters are selected such that on the defined switching surface always is generated asymptotically stable sliding mode. Moreover, observer state error dynamics is globally robustly asymptotically stable. Then, advanced design techniques are

Published by WSEAS Press
www.wseas.org
ISBN: 978-960-474-050-5
ISSN: 1790-5117

generalized to the design of a new modification of sliding mode observers for uncertain MIMO systems with time-delay. Robust sliding and global asymptotic stability conditions are derived by using Lyapunov-Krasovskii V-functional method. By these conditions observer parameters are designed such that an asymptotically stable sliding mode always is generated in observer and observer state error dynamics is robustly globally asymptotically stable. The main results are formulated in terms of Lyapunov matrix equations and some matrix inequalities. Design example for AV-8A Harrier VTOL aircraft with simulation results using MATLAB show the effectiveness of considered design approaches.

The paper is organized as follows: Advanced design techniques of sliding mode observers for MIMO and SISO systems are presented in section 2. Extension to a new modification of sliding mode observer for uncertain MIMO systems with time-delay is presented in section 3. Design example for VTOL aircraft is given in section 4. Finally, the conclusion is included in section 5.

The following notation will be used throughout the paper: $\|x(t)\| = \sqrt{x^T(t)x(t)}$ and $\|A\| = \sqrt{\lambda_{\max}(A^T A)}$ will denote the Euclidean norm for vectors and the spectral norm for matrices respectively; A^T, $\lambda_{\min}(A)$, $\lambda_{\max}(A)$ are the transpose, minimum and maximum eigenvalues of a matrix A, respectively; Rayleigh's min/max matrix inequality for positive definite matrices $P - Q > 0$ is:

$$\lambda_{\min}(P)\|x(t)\|^2 - \lambda_{\max}(Q)\|x(t)\|^2 \le x^T(t)(P-Q)x(t) \le \lambda_{\max}(P)\|x(t)\|^2 - \lambda_{\min}(Q)\|x(t)\|^2$$

5.3.2 Sliding mode observers design techniques for uncertain MIMO and SISO systems

Before embarking to main results let us consider the contributing factors to the sliding mode observer design techniques. In this section sliding mode observers design techniques for MIMO and as a simple example for SISO systems is systematically advanced as a first purpose. Design parameters are selected such that on the defined switching surface always is generated asymptotically stable sliding mode. Moreover, observer state error dynamics is globally robustly asymptotically stable. The observer design problem involves estimating the states of the uncertain dynamical system described by the following differential equations:

$$\dot{x}(t) = (A_0 + \Delta A_0)x(t) + f_0(t, x(t)) + (B + \Delta B)u(t) \quad y(t) = Cx(t) \tag{5.3.1}$$

where the unknown state $x(t) \in R^n$, the control input $u(t) \in R^m$, the measurable output $y(t) \in R^p$ with $m = p < n$ and the model uncertainties $f_0 \in R^n$ are vectors, and the matrices A_0, ΔA_0, B, ΔB and B are compatibly dimensioned. The matrices B and C are assumed to be of full rank. The known matrices A_0 and B represent the nominal linear model parameters of the system; ΔA_0 and ΔB are unknown matrices involving all possible system parameter variations. For solving this problem, we require that the unknown function $f_0(t, x(t))$ to be continuous in $x(t)$ and the following conventional matching conditions are assumed to be valid. There exist functions h_0, w and d_0 such that

$$\left.\begin{aligned} &f_0(t, x(t)) = Bh_0(t, x(t)) \\ &\Delta Bu(t) = Bw(t) \\ &\Delta A_0 x(t) = Bd_0(t, x(t)). \end{aligned}\right\} \tag{5.3.2}$$

Let $\xi_0(t, x(t)) \overset{\Delta}{=} h_0(t, x(t)) + d_0(t, x(t)) + w(t)$. (5.3.3)

It is assumed that

$$\overline{f_0}(t, x(t)) = B\xi_0(t, x(t)) \tag{5.3.4}$$

where the function ξ_0 is unknown but bounded, so that

$$\|\xi_0(t, x(t))\| \le \rho_0 + \beta_0\|y(t)\| \le \rho_0 + \beta_0\sqrt{\lambda_{\max}(C^T C)}\|x(t)\| \tag{5.3.5}$$

where ρ_0 and β_0 are known constant positive scalars.

Note that, second condition of (2) together with condition (5) limits the class of available control laws. However, this is a common limitation (Edwards and Spurgeon, 2000 [64]).

Thus, system (1) can be simplified to:

Published by WSEAS Press
www.wseas.org
ISBN: 978-960-474-050-5
ISSN: 1790-5117

$$\left.\begin{aligned}\dot{x}(t) &= A_0 x(t) + Bu(t) + B\xi_0(t, x(t)) \\ y(t) &= Cx(t)\end{aligned}\right\} \tag{5.3.6}$$

It is also assumed that the pair (A_0, C) is detectable and that there exists a constant feedback gain matrix $G \in R^{n\times p}$ such that $\overline{A_0} = A_0 - GC$ has some desirable stable eigenvalues and there exists a Lyapunov pair (P , Q_0) for $\overline{A}_0$ such that the conventional structural constraint (Edwards and Spurgeon, 1998 [33]):

$$FC = B^T P \tag{5.3.7}$$

is satisfied for some non-singular design matrix $F \in R^{m\times m}$.

The problem to be considered is that of reconstructing the state variables using only measured output information in the framework of modern sliding mode control theory.

The observer motion is governed by the following differential equation:

$$\begin{aligned}\dot{\hat{x}}(t) &= A_0\hat{x}(t) + Bu(t) + G\left[y(t) - C\hat{x}(t)\right] - Bv \\ \hat{y}(t) &= C\hat{x}(t)\end{aligned} \tag{5.3.8}$$

where v is the discontinuous vector term to be formed.

It should be noted that there is various canonical form design of sliding mode observers with different gain matrices:

- Walcott and Zak observer (1988) [51]:

$$v(\hat{x}, y, \rho) = -\rho(t,u)\frac{P^{-1}C^T Ce(t)}{\|Ce(t)\|} \tag{5.3.9}$$

- Walcott, Corless and Zak observer (1987) [50]:

$$v(t, \hat{x}, y) = -\rho(t)\frac{P^{-1}C^T Ce(t)}{\|Ce(t)\|} \tag{5.3.10}$$

- Edwards and Spurgeon modification (1994) [35]:

$$v = -\rho\frac{P^{-1}C^T F^T FCe(t)}{\|FCe(t)\|} \tag{5.3.11}$$

- Edwards and Spurgeon modification (1996,1998) [34], [33]:

$$v = -\rho(t, y, u)\frac{FCe(t)}{\|FCe(t)\|} \tag{5.3.12}$$

where $e(t) = x(t) - \hat{x}(t)$ is the observer state error; ρ, P and F are design parameters. In actual fact, mentioned observers are all equivalent.

Design parameters of these types of observers were determined by using Lyapunov V-functional method such that $e(t) \to 0$ as $t \to \infty$ or observer motion is uniformly ultimately bounded.

Here we consider another type of observer with modified gain matrix:

$$v = -\left[\delta_0 + k_0\|y(t)\|\right](B^T PB)^{-1}\frac{s(t)}{\|s(t)\|} \tag{5.3.13}$$

where, δ_0 and k_0 are design constants to be selected; $s(t)$ is a switching function, which can be defined as follows:

$$s(t) = Fr(t) = F\left[y(t) - \hat{y}(t)\right] = FCe(t) \equiv B^T Pe(t) \tag{5.3.14}$$

where F is a design ($m \times m$)-matrix of full rank, $r(t) = y(t) - \hat{y}(t)$ is the observer residual.

From equations (6) and (8) the observer state error dynamics can be obtained as follows:

$$\begin{aligned}\dot{e}(t) = \overline{A}_0 e(t) &- \left[\delta_0 + k_0\|y(t)\|\right]B(B^T PB)^{-1}\frac{s(t)}{\|s(t)\|} \\ &+ B\xi_0(t, x(t))\end{aligned} \tag{5.3.15}$$

Published by WSEAS Press
www.wseas.org
ISBN: 978-960-474-050-5
ISSN: 1790-5117

where $\overline{A}_0 = A_0 - GC$ is a stable matrix.

5.3.2.1 Sliding conditions

Now, in different from above mentioned observer design approaches we want first to organize on the switching surface $s(t) = 0$ (14) a sliding mode. For this purpose let us select a Lyapunov V-function candidate as:

$$V(s(t)) = \frac{1}{2} s^T(t) s(t) \tag{5.3.16}$$

Then, the time derivative of (16) along observer state error dynamics (15) can be calculated as:

$$\begin{aligned}
\dot{V}(s) &= s^T(t)\dot{s}(t) = s^T(t)B^T P\dot{e}(t) = e^T(t)PBB^T P\overline{A}_0 e(t) \\
&-\left[\delta_0 + k_0 \|y(t)\|\right]\frac{s^T(t)B^T PB(B^T PB)^{-1}s(t)}{\|s(t)\|} + s^T(t)B^T PB\xi_0(t, e(t)) \\
&= \frac{1}{2}e^T(t)(\overline{P}\,\overline{A}_0 + \overline{A}_0^T\overline{P})e(t) - \delta_0\frac{s^T(t)s(t)}{\|s(t)\|} - k_0\|y(t)\|\frac{s^T(t)s(t)}{\|s(t)\|} + s^T(t)B^T PB\xi_0(t, x(t)) \\
&\le -\frac{1}{2}e^T(t)\overline{Q}_0 e(t) - \delta_0\|s(t)\| - k_0\|y(t)\|\|s(t)\| + \rho_0\lambda_{\max}(B^T PB)\|s(t)\| + \beta_0\lambda_{\max}(B^T PB)\|y(t)\|\|s(t)\| \\
&= -\frac{1}{2}e^T(t)\overline{Q}_0 e(t) - \left[\delta_0 - \rho_0\lambda_{\max}(B^T PB)\right]\|s(t)\| - \left[k_0 - \beta_0\lambda_{\max}(B^T PB)\right]\|y(t)\|\|s(t)\|
\end{aligned} \tag{5.3.17}$$

where $\overline{P} = PBB^T P$ is a positive semi-definite matrix satisfying the following Lyapunov matrix equation:

$$\overline{P}\,\overline{A}_0 + \overline{A}_0^T\overline{P} = -\overline{Q}_0\,;\ \overline{Q} \ge 0\,;\ \lambda_{\min}(\overline{Q}) = 0 \tag{5.3.18}$$

where $\overline{Q}_0$ is in general a positive semi-definite matrix.

Thus, if we select the design parameters δ_0 and k_0 as

$$\delta_0 \ge \rho_0\lambda_{\max}(B^T PB) \tag{5.3.19}$$

$$k_0 = \beta_0\lambda_{\max}(B^T PB) \tag{5.3.20}$$

then (17) can be evaluated as:

$$\dot{V} \le -\frac{1}{2}e^T(t)\overline{Q}_0 e(t) - \left[\delta_0 - \rho_0\lambda_{\max}(B^T PB)\right]\|s(t)\| \le -\left[\delta_0 - \rho_0\lambda_{\max}(B^T PB)\right]\|s(t)\| < 0$$

(5.3.21)

since $\lambda_{\min}(\overline{Q}) = 0$. Therefore, we conclude that if the sliding conditions (18), (19) and (20) are satisfied, then on $s(t) = 0$ (14) always is generated a robustly asymptotically stable sliding mode.

5.3.2.2 Global stability conditions

The next step is to derive the global robust asymptotical stability conditions with respect to the observer state error coordinates.

Choose Lyapunov V-function candidate as

$$V(e) = \frac{1}{2}e^T(t)Pe(t) \text{ where } P = P^T > 0 \tag{5.3.22}$$

The time derivative of (22) along the observer state error dynamics (15) is given by

$$\dot{V}(e(t)) = e^T(t)P\dot{e}(t) = \frac{1}{2}e^T(t)(\overline{A}_0^T P + P\overline{A}_0)e(t) + e^T(t)PBv + e^T(t)PB\xi_0(t, x(t)) = -\frac{1}{2}e^T(t)Q_0 e(t)$$

$$-\left[\delta_0 + k_0\|y(t)\|\right]\frac{e^T(t)PB(B^T PB)^{-1}s(t)}{\|s(t)\|} + e^T(t)PB\xi_0(t, x(t))$$

Published by WSEAS Press
www.wseas.org
ISBN: 978-960-474-050-5
ISSN: 1790-5117

$$\leq -\frac{1}{2}e^T(t)Q_0e(t) - \left[\delta_0 + k_0\|y(t)\|\right]\frac{s^T(t)(B^TPB)^{-1}s(t)}{\|s(t)\|} + \rho_0\|s(t)\| + \beta_0\|y(t)\|\|s(t)\|$$

$$\leq -\frac{1}{2}e^T(t)Q_0e(t) - \left[k_0\lambda_{\min}(B^TPB)^{-1} - \beta_0\right]\|y(t)\|\|s(t)\|$$
$$-\left[\delta_0\lambda_{\min}(B^TPB)^{-1} - \rho_0\right]\|s(t)\| \tag{5.3.23}$$

where

$$\overline{A}_0{}^TP + P\overline{A}_0 = -Q_0; \quad Q_0 = Q_0{}^T > 0 \tag{5.3.24}$$

Select k_0 and δ_0 such that

$$k_0\lambda_{\min}(B^TPB)^{-1} = \beta_0 \tag{5.3.25}$$

$$\delta_0\lambda_{\min}(B^TPB)^{-1} \geq \rho_0 \tag{5.3.26}$$

Then (23) reduces to

$$\dot{V}(e(t)) \leq -\frac{1}{2}\lambda_{\min}(Q_0)\|e(t)\|^2 < 0 \text{ for } e(t) \neq 0 \tag{5.3.27}$$

Therefore, we conclude that if stability conditions (24), (25), (26) are satisfied then observer state error dynamics is robustly globally asymptotically stable, i.e. $e(t)$ asymptotically converges to zero as $t \to \infty$.

Note that, since $\lambda_{\max}(B^TPB) = \dfrac{1}{\lambda_{\min}(B^TPB)^{-1}}$ where B^TPB is a positive definite matrix then the sliding and stability conditions coincide.

5.3.2.3. Simplified design example for SISO systems

In this subsection finally, let us consider a reduced design of continuous sliding mode observer for the nominal time-invariant SISO systems when $\Delta A = 0$, $\Delta B = 0$ and $f_0 = 0$ as a simple analytical design example.

Then (1) reduces to:

$$\begin{aligned} \dot{x}(t) &= Ax(t) + bu(t) \\ y(t) &= c^Tx(t) \end{aligned} \tag{5.3.28}$$

where $x(t) \in R^n$ is the unmeasurable state vector, $u(t)$ is the scalar control input. The measured output $y(t)$ is

scalar. A, b and c have the appropriate dimensions.

For this case observer configuration can be selected as follows:

$$\begin{aligned} \dot{\hat{x}}(t) &= A\hat{x}(t) + bu(t) - b\nu(t) \\ \hat{y}(t) &= c^T\hat{x}(t) \end{aligned} \tag{5.3.29}$$

It is assumed that the pair (A, c) is completely observable and structural constraint holds:

$$fc^T = b^TP \tag{5.3.30}$$

where f is a scalar, P is a positive definite design ($n\times n$)-matrix.

Then, the observer-sliding surface can be defined as:

$$s(t) = fr(t) = \mathrm{fc^Te(t)} \equiv \mathrm{b^T}Pe(t) \tag{5.3.31}$$

Subtracting (29) from (28) we have the following observer error system:

Published by WSEAS Press
www.wseas.org
ISBN: 978-960-474-050-5
ISSN: 1790-5117

$$\dot{e}(t) = Ae(t) + b\nu(t) \tag{5.3.32}$$

Now, let us select the observer control term according to equivalent control method:

$$\dot{s}(t) = b^T P\dot{e}(t) = b^T PAe(t) + b^T Pb\,\nu(t) = 0 \tag{5.3.33}$$

Hence

$$\nu(t) = \nu_{eq}(t) = -(b^T Pb)^{-1} b^T PAe(t) \equiv -gs(t) \tag{5.3.34}$$

where $(b^T Pb)^{-1}$ is a positive definite scalar because $(b^T Pb) > 0$; g is a gain scalar.

Substituting (34) into (32) we have observer error system as:

$$\dot{e}(t) = \overline{A}e(t) \tag{5.3.35}$$

where $\overline{A} = \left[A - b(b^T Pb)^{-1} fc^T A\right]$. Our goal is to design the parameters f and P such that $\overline{A}$ always is stable or observer error dynamics (35) is globally asymptotically stable.

Now, let us derive the sliding conditions.

Choose a Lyapunov V-function candidate as follows:

$$V(s(t)) = \frac{1}{2}s^2(t) \tag{5.3.36}$$

Then, the time derivative of (36) along (35) is given by:

$$\dot{V}(s(t)) = s(t)\dot{s}(t) = s(t)b^T P\dot{e}(t) = s(t)b^T P\overline{A}e(t) = e^T(t)Pbb^T P\overline{A}e(t) = \frac{1}{2}e^T(t)(\overline{P}\,\overline{A} + \overline{A}^T\overline{P})e(t)$$

$$= -\frac{1}{2}e^T(t)\overline{Q}e(t) \le 0 \tag{5.3.37}$$

where $\overline{P} = Pbb^T P$ is a positive semi-definite matrix satisfying the following Lyapunov matrix equation:

$$\overline{P}\overline{A} + \overline{A}^T\overline{P} = -\overline{Q}\ ,\ \overline{Q} \ge 0 \tag{5.3.38}$$

where $\overline{Q}$ is a positive semi-definite matrix.

Thus if (38) is satisfied then on $s(t) = 0$ the sliding manifold (31) always is generated an asymptotically stable sliding mode.

Remark 1: A simpler alternative to (30), (38), sliding conditions which provides a positive-definite solution to Lyapunov matrix equation, can be formulated as:

$$fc^T\overline{A} = rfc^T\ ,\ r < 0 \tag{5.3.39}$$

where r is one of the left eigenvalues of the stable matrix $\overline{A}$ corresponding to the eigenvector fc^T.

Then (37) becomes

$$\dot{V}(s(t)) = s(t)\dot{s}(t) = s(t)b^T P\overline{A}e(t) \equiv s(t)fc^T\overline{A}e(t) = s(t)rfc^T e(t) = rs^2(t) < 0 \tag{5.3.40}$$

And the global asymptotical stability conditions with respect to the observer error state coordinates:

$$P\overline{A} + \overline{A}^T P = -Q\ ;\ Q = Q^T > 0 \tag{5.3.41}$$

easily follows from Lyapunov function

$$V(e(t)) = \frac{1}{2}e^T(t)Pe(t) \tag{5.3.42}$$

where P is a positive definite solution of equation (41).

Hence

Published by WSEAS Press
www.wseas.org
ISBN: 978-960-474-050-5
ISSN: 1790-5117

$$\dot{V}(e(t)) = -\frac{1}{2}e^T(t)Qe(t) \le -\frac{1}{2}\lambda_{\min}(Q)\|e(t)\|^2 < 0 \tag{5.3.43}$$

Therefore, an asymptotically stable sliding surface is determined through f and P.

5.3.3 Design modification of sliding mode observers for MIMO time-delay systems

The purpose of this section is to extend the design techniques advanced in section 2 for the design modification of sliding mode observers for uncertain MIMO systems with time-delay. Direct extension is difficult as well. We overcome these difficulties by using the Lyapunov-Krasovskii V-functional method.

Consider the uncertain time-delay MIMO system described by the following differential equations with time-delay:

$$\begin{aligned}
&\dot{x}(t) = (A_0 + \Delta A_0)x(t) + (A_1 + \Delta A_1)x(t-\tau) \\
&+(B + \Delta B)u(t) + f_0(t, x(t)) + f_1(t, x(t-\tau)), \quad t > 0 \\
&x(t) = \phi(t), \ -\tau \le t \le 0, \\
&y(t) = Cx(t)
\end{aligned} \tag{5.3.44}$$

where the unmeasurable state vector $x(t) \in R^n$, the control input $u(t) \in R^m$, the measurable output $y(t) \in R^p$ and the unknown disturbances $f_0 \in R^n$, $f_1 \in R^n$ are vectors, and $A_0 \in R^{n\times n}$, $A_1 \in R^{n\times n}$, $B \in R^{n\times m}$ and $C \in R^{p\times n}$ are known constant matrices with $m = p < n$. The matrices ΔA_0, ΔA_1 and ΔB are real valued unknown functions representing time-varying parameter uncertainties, τ is a known positive time-delay and $\phi(t)$ is a continuous vector-value initial function with $\|\phi\| = \sup\|\phi(t)\|$ on $-\tau \le t \le 0$ and $x(0) = \phi(0) = x_0$.

We want to design a sliding mode observer modification for uncertain MIMO systems with time-delay such that in which can always be generated a robustly asymptotically stable sliding mode.

In addition to assumptions (2), (4), (7) we now make the following assumptions:

Assumption 1: The nominal system of (44) is detectable (Pearson and Fiagbedzi, 1989) [45]:

$$rank\begin{bmatrix} sI - A_0 - A_1 e^{-\tau s} \\ C \end{bmatrix} = n \tag{5.3.45}$$

for all complex s with $\mathrm{Re}(s) \ge 0$.

Assumption 2: There exist the functions h_1 and d_1 such that the following conventional matching

conditions are satisfied:

$$\begin{aligned}
&f_1(t, x(t-\tau)) = Bh_1(t, x(t-\tau)) \\
&\Delta A_1 x(t-\tau) = Bd_1(t, x(t-\tau))
\end{aligned} \tag{5.3.46}$$

Let $\xi_1(t, x(t-\tau)) = h_1(t, x(t-\tau)) + d_1(t, x(t-\tau))$

It is assumed that

$\overline{f}_1(t, x(t-\tau)) = B\xi_1(t, x(t-\tau)$ (47) where the function ξ_1 is unknown but bounded, so that

$$\|\xi_1(t, x(t-\tau)\| \le \rho_1 + \beta_1\|y(t-\tau)\| \le \rho_1 + \beta_1\sqrt{\lambda_{\max}(C^T C)}\|x(t-\tau)\| \tag{5.3.48}$$

where ρ_1 and β_1 are the known positive constant scalars.

Then, time-delay system (44) can be represented as

$$\left.\begin{aligned}
&\dot{x}(t) = A_0 x(t) + A_1 x(t-\tau) + Bu(t) + B\xi_0(t, x(t)) \\
&\qquad + B\xi_1(t, x(t-\tau)), \quad t > 0 \\
&x(t) = \phi(t), \quad -\tau \le t \le 0 \\
&y(t) = Cx(t)
\end{aligned}\right\} \tag{5.3.49}$$

Now let us construct a new modification of time-delay observer as:

Published by WSEAS Press
www.wseas.org
ISBN: 978-960-474-050-5
ISSN: 1790-5117

$$\dot{\hat{x}}(t) = A_0\hat{x}(t) + A_1\hat{x}(t-\tau) + Bu(t) + G\left[y(t) - C\hat{x}(t)\right] - Bv_1$$

$$\hat{y}(t) = C\,\hat{x}(t) \tag{5.3.50}$$

The observer design parameters should be determined so that an asymptotically stable sliding mode will be generated on the sliding surface $s(t) = 0$ (14) defined for the time-delay system (49). The output error feedback gain matrix G can be chosen so that the closed-loop matrix $\overline{A}_0 \overset{\Delta}{=} A_0 - GC$ is stable and has some desirable eigenvalues.

The discontinuous vector term v_1 can be selected as follows:

$$v_1 = -\left[\delta_1 + k_0\|y(t)\| + k_1\|y(t-\tau)\|\right](B^T PB)^{-1}\frac{s(t)}{\|s(t)\|} \tag{5.3.51}$$

where δ_1, k_0, k_1 and P are observer design parameters to be again selected for (49).

Then, the time-delay observer state error dynamics can be obtained from (49) and (50) as:

$$\dot{e}(t) = \overline{A}_0 e(t) + A_1 e(t-\tau) - \left[\delta_1 + k_0\|y(t)\| + k_1\|y(t-\tau)\|\right]B(B^T PB)^{-1}\frac{s(t)}{\|s(t)\|}$$

$$+B\xi_0(t, x(t)) + B\xi_1(t, x(t-\tau)), \quad t > 0 \tag{5.3.52}$$

$$e(t) = \phi_e(t), \phi_e(t) = \phi(t) - \hat{\phi}(t), \quad -\tau \le t \le 0.$$

As seen from (50), (51) the structure of a new combined time-delay observer consists of three parts: 1) Conventional linear Luenberger part with gain matrix G for the stabilization of the nominal part of the observer error system, 2) Relay term with gain parameter δ_1 for the suppression the external disturbance, and 3) Variable structure term with feedback gain parameters k_0 and k_1 for the compensation the parameter perturbations. The design parameters of combined time-delay observer will be selected by using the classical Lyapunov-Krasovkii V-functional method.

5.3.3.1 Sliding conditions

The following lemma summarizes the sliding conditions.

Lemma1: Combined time-delay observer state error dynamics is given by (52). Then, an asymptotically stable sliding mode can always be generated on the switching surface $s(t) = 0$ (14) defined for time-delay system (52) if the following conditions are satisfied:

$$\overline{Q}_1 = -\left[\overline{A}_0^T\overline{P} + \overline{P}\,\overline{A_0} + \overline{R}\right] \ge 0, \ \overline{P} = PBB^T P \ge 0 \tag{5.3.53}$$

or $0 \le \overline{R} \le -\left[\overline{A}_0^T\overline{P} + \overline{P}\,\overline{A_0}\right]$

$$\overline{H} = \begin{bmatrix} \overline{Q}_1 & -\overline{P}A_1 \\ -A_1^T\overline{P} & \overline{R} \end{bmatrix} \ge 0 \tag{5.3.54}$$

$$\delta_1 > (\rho_0 + \rho_1)\lambda_{\max}(B^T PB) \tag{5.3.55}$$

$$k_0 = \beta_0\lambda_{\max}(B^T PB) \tag{5.3.56}$$

$$k_1 = \beta_1\lambda_{\max}(B^T PB) \tag{5.3.57}$$

where $\overline{Q}_1$ and $\overline{H}$ are any positive semi-definite matrices.

Proof: Choose a Lyapunov-Krasovskii functional candidate as follows:

$$V(t,\theta) = s^T(t)s(t) + \int_{t-\tau}^{t} e^T(\theta)\overline{R}e(\theta)d\theta > 0 \tag{5.3.58}$$

where $\overline{R} = \overline{R}^T \ge 0$ is a positive semi-definite matrix to be selected.

The time derivative of (58) along (52) can be calculated as follows:

Published by WSEAS Press
www.wseas.org
ISBN: 978-960-474-050-5
ISSN: 1790-5117

$$\dot{V}(t,\theta) = 2s^T(t)\dot{s}(t) + e^T(t)\overline{R}e(t) - e^T(t-\tau)\overline{R}e(t-\tau)$$
$$= 2s^T(t)B^T P\dot{e}(t) + e^T(t)\overline{R}e(t) \ - e^T(t-\tau)\overline{R}e(t-\tau)$$
$$= 2e^T(t)PBB^T P\overline{A}_0 e(t) + 2e^T(t)PBB^T PA_1 e(t-\tau) - 2\left[\delta_1 + k_0\|y(t)\| + k_1\|y(t-\tau)\|\right]\frac{s^T(t)B^T PB(B^T PB)^{-1}s(t)}{\|s(t)\|}$$
$$+2s^T(t)B^T PB\xi_0(t,x(t)) + 2s^T(t)B^T PB\xi_1(t,x(t-\tau)) + e^T(t)\overline{R}e(t) \ - e^T(t-\tau)\overline{R}e(t-\tau) \qquad (5.3.59)$$

Rearranging (59) similar to (17) advanced in section 2, we get:

$$\dot{V}(t,\theta) \le e^T(t)\left[\overline{A}_0{}^T\overline{P} + \overline{P}\overline{A}_0 + \overline{R}\right]e(t) + 2e^T(t)\overline{P}A_1 e(t-\tau)$$
$$-e^T(t-\tau)\overline{R}e(t-\tau) - 2\delta_1\|s(t)\| - 2k_0\|y(t)\|\|s(t)\| - 2k_1\|y(t-\tau)\|\|s(t)\| + 2(\rho_0+\rho_1)\lambda_{\max}(B^T PB)\|s(t)\|$$
$$+2\beta_0\lambda_{\max}(B^T PB)\|y(t)\|\|s(t)\| + 2\beta_1\lambda_{\max}(B^T PB)\|y(t-\tau)\|\Big]\|s(t)\|$$
$$= -\begin{bmatrix} e(t) \\ e(t-\tau)\end{bmatrix}^T \begin{bmatrix} \overline{Q}_1 & -\overline{P}A_1 \\ -A_1{}^T\overline{P} & \overline{R}\end{bmatrix}\begin{bmatrix} e(t) \\ e(t-\tau)\end{bmatrix} - 2\left[\delta_1 - (\rho_0+\rho_1)\lambda_{\max}(B^T PB)\right]\|s(t)\|$$
$$-2\left[k_0 - \beta_0\lambda_{\max}(B^T PB)\right]\|y(t)\|\|s(t)\| - 2\left[k_1 - \beta_1\lambda_{\max}(B^T PB)\right]\|y(t-\tau)\|\|s(t)\| \qquad (5.3.60)$$

If the conditions (53)-(57) hold, then (60) can be evaluated as

$$\dot{V}(e(t),e(t-\tau)) \le -\begin{bmatrix} e(t) \\ e(t-\tau)\end{bmatrix}^T \overline{H}\begin{bmatrix} e(t) \\ e(t-\tau)\end{bmatrix}$$
$$-2\left[\delta_1 - (\rho_0+\rho_1)\lambda_{\max}(B^T PB)\right]\|s(t)\|$$
$$\le -2\left[\delta_1 - (\rho_0+\rho_1)\lambda_{\max}(B^T PB)\right]\|s(t)\| < 0 \qquad (5.3.61)$$

Since $\lambda_{\min}\left[\overline{H}\right] = 0$ and $-\begin{bmatrix} e(t) \\ e(t-\tau)\end{bmatrix}^T \overline{H}\begin{bmatrix} e(t) \\ e(t-\tau)\end{bmatrix} \le 0$.

Therefore, we conclude that an asymptotically stable sliding motion always is generated on the sliding surface $s(t) = 0$ (14). Although, it should be noted that, as shown by Hong, 2004 [69] if $V > 0$ and even $\dot{V} \le 0$ then a state-delayed system is asymptotically stable also.

5.3.3.2 Global stability conditions

The following theorem summarizes our stability results.

Theorem 1: Suppose that Assumptions 1,2 and the conditions of Lemma1 are met. Then the time-delay observer error system (52) is robustly globally asymptotically stable if there exist some positive definite matrices *P*, *R* and positive constant scalars δ_1, k_0 and k_1 such that the following conditions are satisfied:

$$Q_1 = -\left[\overline{A}_0^T P + P\overline{A_0} + R\right] > 0 \qquad (5.3.62)$$

$$H = \begin{bmatrix} Q_1 & -PA_1 \\ -A_1{}^T P & R\end{bmatrix} > 0 \text{ or its Schur complement}$$

$$H = Q_1 - PA_1 R^{-1} A_1{}^T P > 0 \qquad (5.3.63)$$

$$\delta_1\lambda_{\min}(B^T PB)^{-1} \ge \rho_0 + \rho \qquad (5.3.64)$$

$$k_0\lambda_{\min}(B^T PB)^{-1} = \beta_0 \qquad (5.3.65)$$

$$k_1\lambda_{\min}(B^T PB)^{-1} = \beta_1 \qquad (5.3.66)$$

Proof: Choose a Lyapunov-Krasovskii V-functional candidate as:

$$V(t,\theta) = e^T(t)Pe(t) + \int_{t-\tau}^{t} e^T(\theta)\mathrm{Re}(\theta)d\theta > 0 \qquad (5.3.67)$$

where, P and $R = R^T > 0$ are any positive definite symmetric matrices to be selected.

Published by WSEAS Press
www.wseas.org
ISBN: 978-960-474-050-5
ISSN: 1790-5117

The time derivative of (67) along the trajectory of observer error system (52) can be calculated and rearranged as follows:

$$\dot{V}(e(t),e(t-\tau)) = \dot{e}^T(t)Pe(t) + e^T(t)P\dot{e}(t) + e^T(t)\,\mathrm{Re}(t) - e^T(t-\tau)\,\mathrm{Re}(t-\tau)$$
$$= e^T(t)\left[\overline{A}_0{}^T P + P\overline{A}_0 + R\right]e(t) + 2e^T(t)PA_1e(t-\tau) - e^T(t-\tau)\,\mathrm{Re}(t-\tau)$$
$$-2\left[\delta_1 + k_0\|y(t)\| + k_1\|y(t-\tau)\|\right]\frac{e^T(t)PB(B^TPB)^{-1}s(t)}{\|s(t)\|} + 2e^T(t)PB\xi_0(t,x(t)) + 2e^T(t)PB\xi_1(t,x(t-\tau))$$
$$= -e^T(t)Q_1e(t) + 2e^T(t)PA_1e(t-\tau) - e^T(t-\tau)\,\mathrm{Re}(t-\tau) - 2\left[\delta_1 + k_0\|y(t)\| + k_1\|y(t-\tau)\|\right]\frac{s^T(t)(B^TPB)^{-1}s(t)}{\|s(t)\|}$$
$$+2s^T(t)\xi_0(t,x(t)) + 2s^T(t)\xi_1(t,x(t-\tau))$$
$$\le -\begin{bmatrix} e(t) \\ e(t-\tau)\end{bmatrix}^T \begin{bmatrix} Q_1 & -PA_1 \\ -A_1{}^TP & R\end{bmatrix}\begin{bmatrix} e(t) \\ e(t-\tau)\end{bmatrix} - 2\left[\delta_1\lambda_{\min}(B^TPB)^{-1} - (\rho_0+\rho_1)\right]\|s(t)\| \tag{5.3.68}$$
$$-2\left[k_0\lambda_{\min}(B^TPB)^{-1} - \beta_0\right]\|y(t)\|\|s(t)\| - 2\left[k_1\lambda_{\min}(B^TPB)^{-1} - \beta_1\right]\|y(t-\tau)\|\|s(t)\|$$
$$= -\begin{bmatrix} e(t) \\ e(t-\tau)\end{bmatrix}^T H\begin{bmatrix} e(t) \\ e(t-\tau)\end{bmatrix} < 0 \qquad \text{since} \qquad H > 0\,.$$

Therefore, we conclude that the time-delay observer error system (52) is robustly globally asymptotically stable.

Note that, the sliding and stability conditions are coordinated very well.

5.3.4 Design example: To illustrate the design modification of a combined time-delay observer, let us consider the observer design example for fault-tolerant control of AV-8A Harrier VTOL aircraft in hovering flight. The nominal parameters of this aircraft are taken from (Calise and Kramer, 1984) [29]:

$$\dot{x}(t) = A_0x(t) + Bu(t)$$
$$y(t) = Cx(t)$$

where, the state vector is represented by $x^T = [\psi\ \phi\ \upsilon\ \mathrm{r}\ \mathrm{p}]$,

ψ is Euler yaw attitude perturbation (rad),

ϕ is Euler roll attitude perturbation (rad),

υ is the velocity perturbation along body y axis(m/s),

r is the body-axis yaw rate (rad/s),

p is the body-axis roll rate (rad/s),

the control inputs are $u^T = [\delta_{LAT}\ \ \delta_{RUD}]$:

δ_{LAT} is the lateral stick perturbation (cm),

δ_{RUD} is the rudder pedal perturbation (cm),

and the system, control and output matrices are given by:

$$A_0 = \begin{bmatrix} 0 & 0 & 0 & 1 & 0 \\ 0 & 0 & 0 & 0 & 1 \\ 0 & 9.8 & -0.042 & 0 & 0 \\ 0 & 0 & -0.007 & -0.06 & -0.075 \\ 0 & 0 & -0.039 & 0.11 & -0.260 \end{bmatrix}$$

Published by WSEAS Press
www.wseas.org
ISBN: 978-960-474-050-5
ISSN: 1790-5117

$$B=\begin{bmatrix} 0 & 0 \\ 0 & 0 \\ 0 & -0.27 \\ 0.0055 & 0.085 \\ 0.177 & -0.033 \end{bmatrix},\ C=\begin{bmatrix} 1 & 1 & 0 & 1 & 1 \\ 1 & 1 & 1 & 0 & 1 \end{bmatrix}$$

For the simulation, the parameter perturbations are selected as follows:

$\Delta A_0 = 0.2\sin(t)A_0$, $\Delta A_1 = 0.2\cos(t)A_1$, $A_1 = 0.3A_0$

Aircraft model really has some small time-delay because of pilot's (or commands) effective time delay (Blakelock, 1991 [30]) and transports delays of aircraft mechanical and hydraulic servomechanisms. For the simulation purpose we select $\tau = 0.24s$.

Simplified design procedures for time delay observer (50) and (51) with given parameters can be fulfilled by the following steps:

- Find the eigenvalues of matrix A_0

$\mathrm{Eig}(A_0) = 0;\ 0.2715 \pm 0.6239i;\ -0.8253;\ -0.0798$

A_0 is unstable matrix.

- Using pole placement Matlab command find gain matrix G for A_0 and C such that $\overline{A}_0$ has some desirable left eigenvalues:

Desired poles: λ=[-2.4 -3 -3+2i -3-2i -3.4]

C=[1 1 0 1 1;1 1 1 0 1] ; G = PLACE(A_0^T,C^T,λ)^T

$$G=\begin{bmatrix} -1.5081 & -3.1242 \\ -0.9076 & 2.9437 \\ 2.4910 & 5.6844 \\ 8.2576 & -3.1940 \\ 0.0564 & 3.0359 \end{bmatrix}$$

- Calculate

$\overline{A}_0 = A_0 - G*C$

$$=\begin{bmatrix} 4.6324 & 4.6324 & 3.1242 & 2.5081 & 4.6324 \\ -2.0361 & -2.0361 & -2.9437 & 0.9076 & -1.0361 \\ -8.1754 & 1.6246 & -5.7264 & -2.4910 & -8.1754 \\ -5.0635 & -5.0635 & 3.1870 & -8.3176 & -5.1385 \\ -3.0923 & -3.0923 & -3.0749 & 0.0536 & -3.3523 \end{bmatrix}$$

eig($\overline{A}_0$)= -3.0000 + 2.0000i, -3.0000 - 2.0000i,

-2.4000, -3.4000, -3.0000.

which is a stable matrix.

- Solve Lyapunov equation (62) for P:

Q=[1 0 0 0 0;0 1 0 0 0 ;0 0 1 0 0;0 0 0 1 0;0 0 0 0 1];

where $Q = Q_1 + R = I_5$; $\mathrm{P} = \mathrm{LYAP}(\overline{\mathrm{A}}_0, \mathrm{Q})$

$$P=\begin{bmatrix} 1.9024 & -0.0668 & -1.1028 & -1.0030 & -0.6566 \\ -0.0668 & 0.2177 & -0.0055 & -0.1363 & 0.0822 \\ -1.1028 & -0.0055 & 1.4484 & 1.2771 & -0.2407 \\ -1.0030 & -0.1363 & 1.2771 & 1.3908 & -0.2392 \\ -0.6566 & 0.0822 & -0.2407 & -0.2392 & 0.8960 \end{bmatrix}$$

eig(P) = 0.0712, 0.0906, 0.2763, 1.5689, 3.8483.

which is a positive definite matrix.

Published by WSEAS Press
www.wseas.org
ISBN: 978-960-474-050-5
ISSN: 1790-5117

- $\overline{P} = PBB^T P$

$$= \begin{bmatrix} 0.0697 & -0.0047 & -0.0600 & -0.0470 & -0.0156 \\ -0.0047 & 0.0004 & 0.0030 & 0.0023 & 0.0020 \\ -0.0600 & 0.0030 & 0.0767 & 0.0613 & -0.0097 \\ -0.0470 & 0.0023 & 0.0613 & 0.0490 & -0.0088 \\ -0.0156 & 0.0020 & -0.0097 & -0.0088 & 0.0250 \end{bmatrix}$$

$$\text{eig}(\overline{P}) = \begin{matrix} 0.1790, & 0.0416, & 0.0000 + 0.0000\text{i}, \\ 0.0000 - 0.0000\text{i}, & 0.0000 \end{matrix}$$

which is a positive semi-definite matrix.

- The conditions (53) and (62) are independent. Equation (62) has a positive definite solution *P*. Then (53) always holds because $0 \le \overline{R} \le -\left[\overline{A_0}^T \overline{P} + \overline{P}\,\overline{A_0}\right]$.

- Calculate $B^T PB = \begin{bmatrix} 0.0276 & 0.0015 \\ 0.0015 & 0.0550 \end{bmatrix}$

$eig(B^T PB) = \quad 0.0276, \quad 0.0551$;

which is a positive definite matrix.

$$B^T P = \begin{bmatrix} -0.1217 & 0.0138 & -0.0356 & -0.0347 & 0.1573 \\ 0.2342 & -0.0128 & -0.2746 & -0.2187 & 0.0151 \end{bmatrix}$$

$$(B^T PB)^{-1} = \begin{bmatrix} 36.2214 & -0.9658 \\ -0.9658 & 18.1922 \end{bmatrix}$$

$eig((B^T PB)^{-1}) = \quad 36.2730, \quad 18.1406$

- Select a matrix F such that condition (7) holds:

$$F = \begin{bmatrix} -0.0347 & -0.0356 \\ -0.2187 & -0.2746 \end{bmatrix}; \quad F^{-1} = \begin{bmatrix} -157.5535 & 20.4257 \\ 125.4805 & -19.9093 \end{bmatrix}$$

- Select a matrix H_0 such that a matching condition for external disturbance holds:

$$D = BH_0 = \begin{bmatrix} 0 & 0 \\ 0 & 0 \\ 0 & -0.27 \\ 0.0055 & 0.085 \\ 0.177 & -0.033 \end{bmatrix} \begin{bmatrix} 0 & 0 & 0 & 0.2 & 0 \\ 0 & 0 & 0.1 & 0 & 0.2 \end{bmatrix}$$

$$= \begin{bmatrix} 0 & 0 & 0 & 0 & 0 \\ 0 & 0 & 0 & 0 & 0 \\ 0 & 0 & -0.0270 & 0 & -0.0540 \\ 0 & 0 & 0.0085 & 0.0011 & 0.0170 \\ 0 & 0 & -0.0033 & 0.0354 & -0.0066 \end{bmatrix}$$

$\rho_0 + \rho_1 = \|D\| = 0.0639$.

- $\beta_0 = \max_{\sigma} \|\Delta A_0\| = 1.96$, $\beta_1 = \max_{\sigma} \|\Delta A_1\| = 0.588$

- Find from (64), (65), (66) :

$\delta_1 \ge 0.0035$, $k_0 = 0.1080$, $k_1 = 0.0324$

Thus, all the parameters of the time-delay observer are designed.

For testing the combined time-delay observer (50), (51) and (14) is simulated. Block diagram of which is shown in Figure 1. For the convenience of simulation the time-delay system model is taken as:

$$\dot{x}(t) = (A_0 + \Delta A_0)x(t) + (A_1 + \Delta A_1)x(t-\tau) + Bu(t) + Df(t) \qquad (5.3.69)$$

Published by WSEAS Press
www.wseas.org
ISBN: 978-960-474-050-5
ISSN: 1790-5117

where D is the ($n \times n$)-matrix, $f(t)$ is a norm bounded n-vector disturbance $\|f(t)\| \le f_0$. Equation (69) can easily be transformed to the form of time-delay system (49). Simulation results using MATLAB-SIMULINK are shown in Figure 2-7 (for original closed-loop system) and Figure 8-12 (for original unstable open-loop system). As seen from these figures, the combined time-delay observer estimates the state vector satisfactorily (observer residual is satisfactorily small) which show the effectiveness of our observer design approaches.

5.3.5 Conclusion

In this section we have presented two contributions. One of which is to advance a sliding mode observer design techniques for uncertain MIMO and SISO systems, such that on the switching surface can always be generated robustly asymptotically stable sliding mode. The main result is to design of new modification of sliding mode time-delay observer for uncertain time-delay MIMO systems with parameter perturbations and external disturbances by using Lyapunov-Krasovskii V-functional method. Robust stable sliding and global asymptotical stability conditions are formulated in terms of Lyapunov matrix equations and some matrix inequalities. Design example for AV-8A Harrier VTOL aircraft with simulation results show the effectiveness of our observer design approaches.

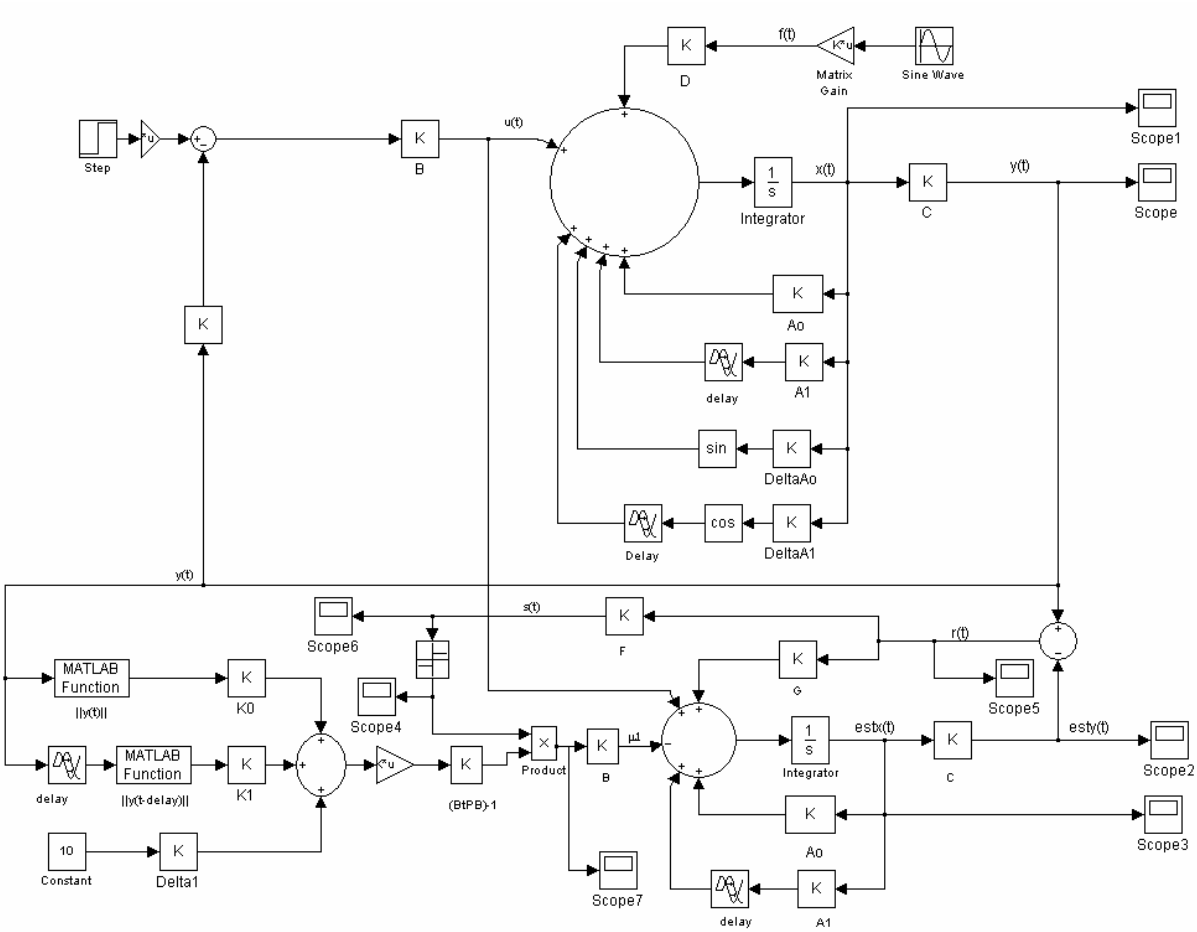

Fig. 1 Block Diagram of multivariable sliding mode observer for uncertain time-delay system with parameter perturbations and external disturbances

Published by WSEAS Press
www.wseas.org
ISBN: 978-960-474-050-5
ISSN: 1790-5117

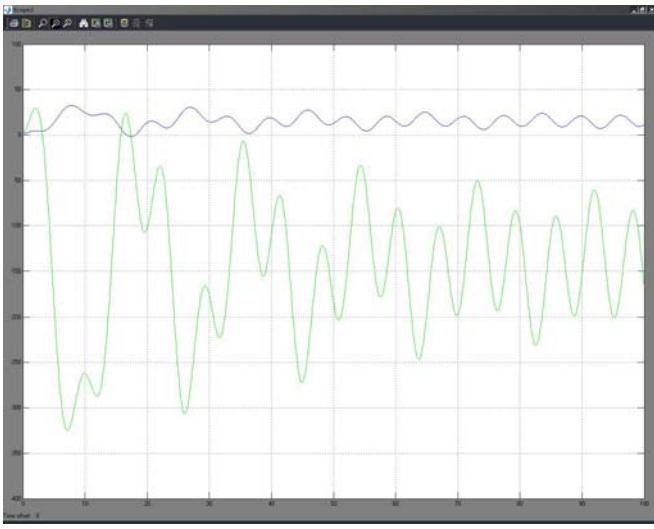

Figure 2. Original state responses

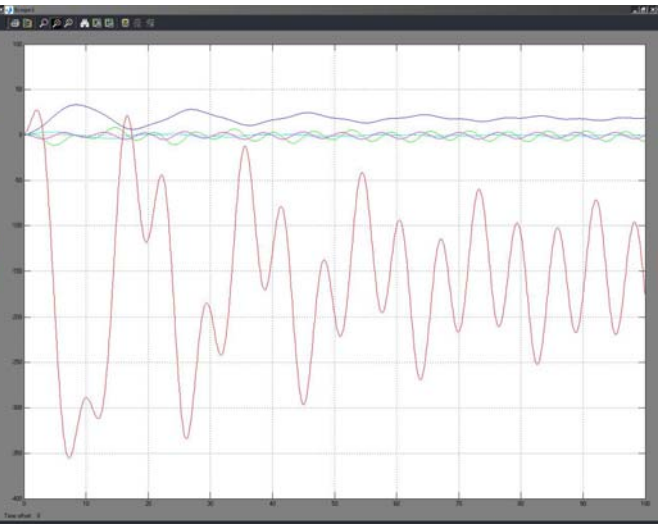

Figure 3. Estimated state responses.

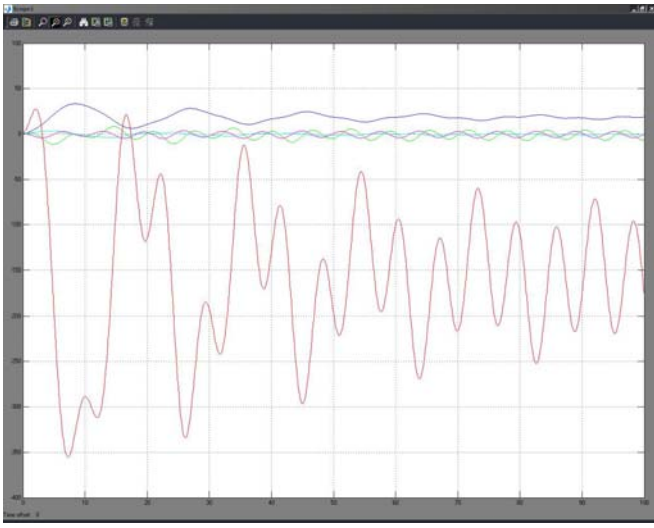

Figure 4. Original output responses

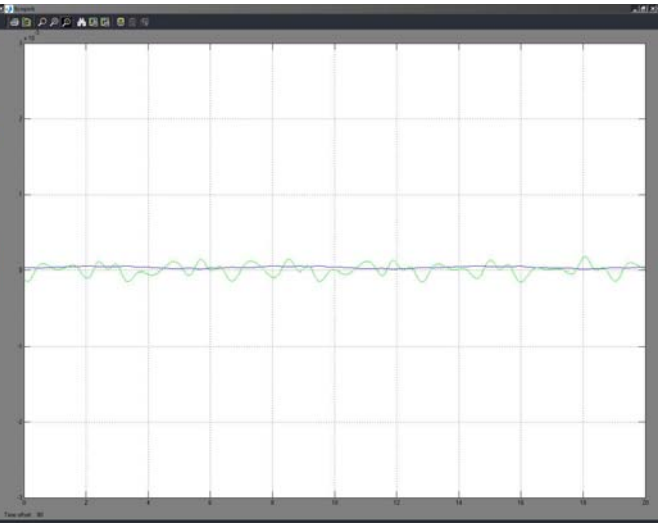

Figure 5. Estimated output responses.

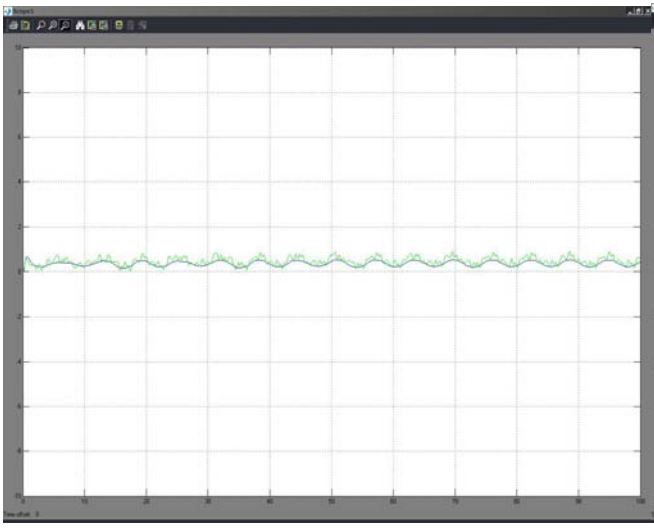

Figure 6. Switching functions.

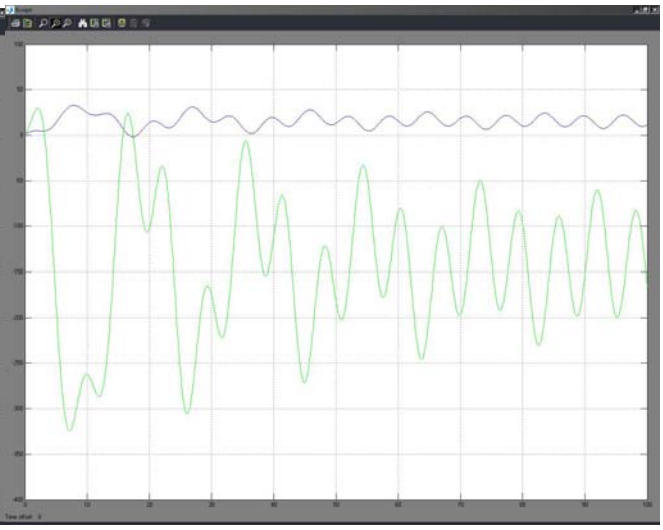

Figure 7. Observer residual

Published by WSEAS Press
www.wseas.org

ISBN: 978-960-474-050-5
ISSN: 1790-5117

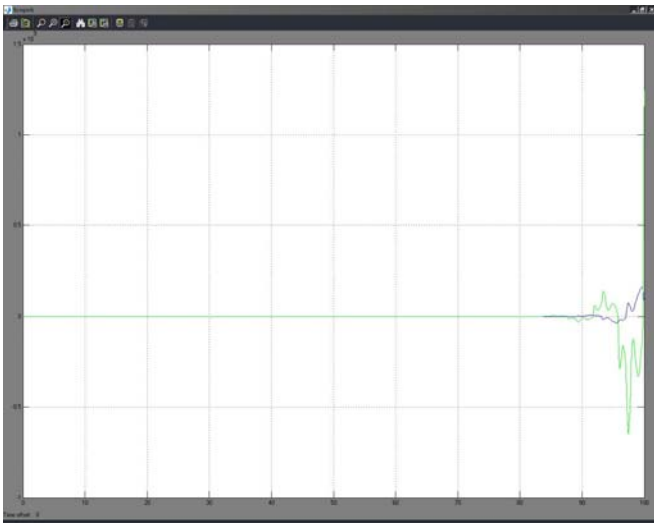

Figure 8. Unstable open-loop state responses.

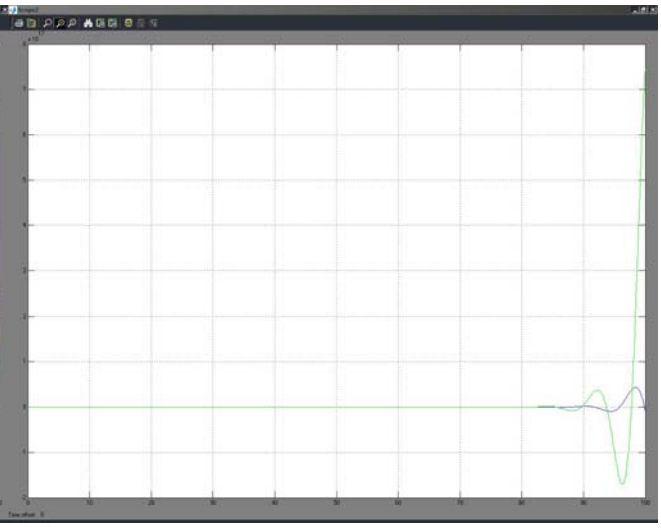

Figure 9. Estimated state responses

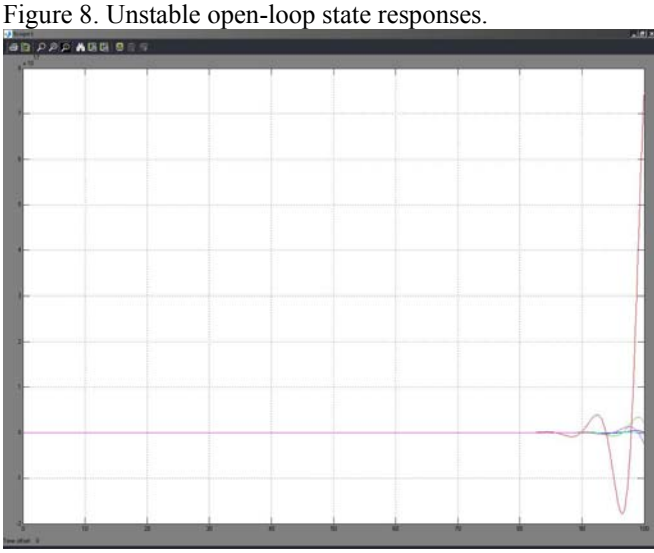

Figure 10. Open-loop output responses.

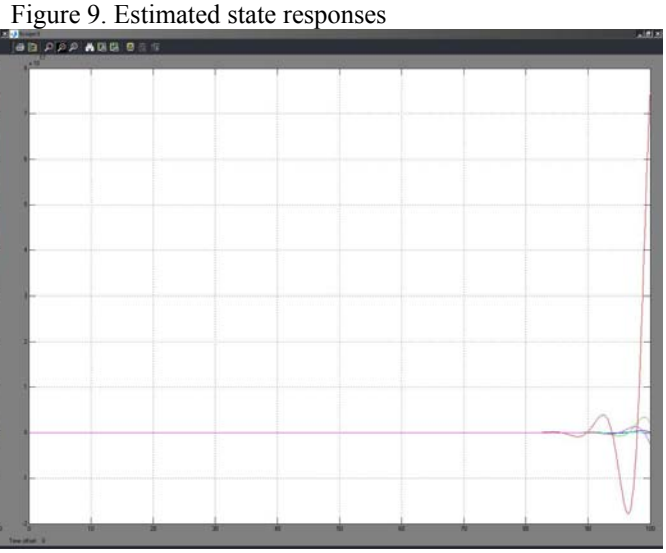

Figure 11. Estimated output responses

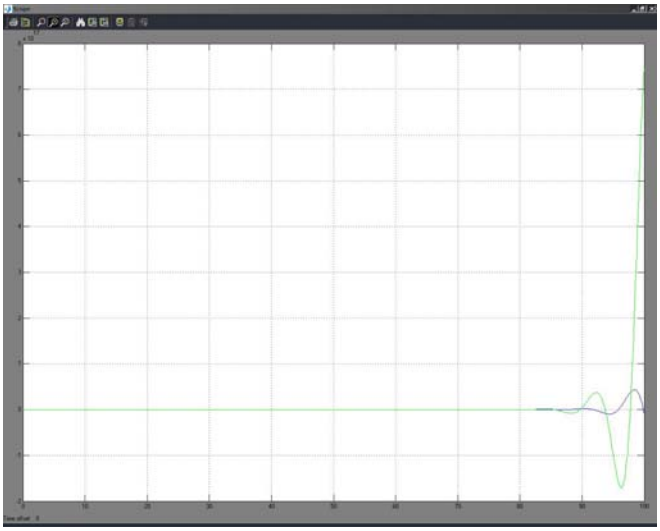

Figure 12. Open-loop switching functions.

5.4. References

1. D.W. Gu and F.W. Poon, "A robust state observer scheme", IEEE Trans. Automat. Contr., vol. AC-46, pp.1958-1963, December 2001.

Published by WSEAS Press
www.wseas.org

ISBN: 978-960-474-050-5
ISSN: 1790-5117

2. Petersen, I.R. , “Disturbance attenuation and optimization: A design method based on the algebraic Riccati equation”, IEEE Transactions on Automatic Control, vol. AC-32, No. 5, pp. 427-429, 1987.
3. K. Ogata, Modern Control Engineering, Fourth Edition, Prentice Hall, New Jersey, 2002.
4. M.E. Elena and J.C. Willems, “Observer synthesis in the behavioral approach”, IEEE Transactions on Automatic Control, vol.44, No.12, pp. 2297-2307
5. D.G. Luenberger, “An introduction to observers”, IEEE Transactions on Automatic Control, Vol. AC-16, No. 6, pp. 596-602, 1971.
6. C. Edwards and S.K. Spurgeon, Sliding Mode Control, London, Taylor and Francis, 1998.
7. I.K. Fong, S.C. Tsay and T.S. Kuo, “Robust observer design for nonlinear uncertain systems with LQ regulators”, International Journal of Systems Science, Vol. 23, No. 11, pp. 1937-1952, 1992.
8. R. Rajamani and Y.M. Cho, “Existence and design of observer for nonlinear systems: relation to distance to unobservability” , International Journal of Control, Vol. 69, No.5, pp. 717-731, 1998.
9. Luenberger, D.G. An introduction to observers. IEEE Transactions on Automatic Control, 1971, 16(6), 596-602.
10. Utkin V. I. 'Identification principles using sliding modes'. Dokl. AN SSSR, 1981, 257(3), 558-561, (in Russian).
11. Hashimoto, H., Utkin,V.I., Xu, J.X., Susuki, H. and Harashima, F., VSS observer for linear time-varying system. Proceedings of IECON'90, 1990, 34-39.
12. Walcott B. L. and Zak S. H., Combined observer controller synthesis for uncertain dynamical systems with applications, IEEE Transactions on Systems ,Man and Cybernetics, 1988, 18(1),.88-104.
13. Edwards C. and Spurgeon S. K., On the development of discontinuous observers , International Journal of Control, 1994, 59(5), pp. 1211- 1229.
14. Sira-Ramizer H., Spurgeon S. K. and Zinober A.S. I., Robust observer–controller design for linear systems, Variable structure and Lyapunov control, London: Springer and Verlog, 1994, 161-180.
15. Young, K.D., Utkin, V.I. and Özgüner, Ü., A control engineers guide to sliding mode control. IEEE Transactions on Control Systems Technology, 7(3), 1999, 328-342.
16. Watanabe K., Fukuda T. and Tzateftas S.G., Sliding mode control and a variable structure system observer as a dual problem for systems with non-linear uncertainties, Int. J. Systems Science , 23(11),1992, 1991-2001.
17. Slotine, J.J.E., Hedrick, J.K. and Misawa, E.A., On sliding observers for non-linear systems, Transactions of the ASME Journal of Dynamic Systems, Measurement and Control, 122(3), 1987, 245-252.
18. Mielczarski, W., Very fast linear and non-linear observers, Part 1. Theory, International Journal of Control, 48(5), 1988, 1819-1831.
19. Jafarov, E.M., Design new robust sliding mode observer for uncertain MIMO and SISO systems with and without time-delay. Proceedings of the 7th IEEE International Workshop on Variable Structure Systems “Advance in Variable Structure Systems”, Sarajevo, 17-19 July, 2002, 572-577.
20. Edwards Ch. and Spurgeon, S. K, Sliding Mode Control, 1998, (Taylor and Francis Ltd., London).
21. Kwakernaak, H. and Sivan, R., Linear Optimal Control Systems, 1972(John Wiley, New York).
22. Burghes, D.N. and Graham, H., Introduction to Control Theory: Including Optimal Control, 1980 (John Wiley & Sons, New York).
23. Friedland, B., Control System Design,1987, (McGraw-Hill Book Company, New York).
24. Utkin, V.I., Sliding Modes in Control Optimization, 1992, (Springer-Verlag, Berlin).
25. Hung, J.Y., Gao, W.B. and Hung J.C., Variable structure control, A survey IEEE Transactions on Industrial Electronics, 40(1), 1993, 2-22.
26. Slotine, J.J.E. and Li, W., Applied Nonlinear Control, 1991, (Prentice Hall, Englewood Cliffs).
27. Khalil, H.K., Nonlinear Systems,1996(Prentice Hall, New Jersey).

Published by WSEAS Press
www.wseas.org
ISBN: 978-960-474-050-5
ISSN: 1790-5117

28. Ackerman, J.E., Der entwulf linearer regelungs systems in zustandsraum, Regelungstechnik und Prozessdatenvererb., 7, 1972, 297-300.
29. Calise, A. J. and Kramer, F. S (1984). A variable structure approach to robust control of VTOL aircraft" International Journal of Guidance, Control and Dynamics, vol. 7, No: 5, pp. 620-626.
30. Blakelock, J. H. (1991). Automatic Control of Aircraft and Missiles. John Wiley, New York.
31. Darouach, M. , Zasadzinski, M. , and Xu, S.J. (1994). Full order observers for linear systems with unknown inputs. IEEE Transactions on Automatic Control, vol.39,no.3, pp. 606-609.
32. DeCarlo, R., Zak, S.H., and Matthews, G.P. (1988). Variable structure control of nonlinear multivariable systems: A tutorial. Proceedings IEEE, vol. 76, pp. 212-232.
33. Edwards, C. and Spurgeon, S.K. (1998). Sliding Mode Control. Taylor and Francis Ltd., London.
34. Edwards, C. and Spurgeon, S.K. (1996). Robust output tracking using a sliding mode controller observer scheme. International Journal of Control, vol. 64, no. 5, pp. 967-983.
35. Edwards, C. and Spurgeon, S.K. (1994). On the development of discontinuous observers. International Journal of Control, vol. 59, no. 5, pp. 1211-1229.
36. Fattaouh, A., Sename, O. and Dion, J.M. (1999). –decay rate observer design for linear systems with delayed state. In Proc. of European Control Conference. ECC'99, Karlsruhe, Germany, 31 August-3 September.
37. Garofalo, F., and Glielmo (Eds), L. (1996). Robust Control via Variable Structure and Lyapunov Techniques. Springer-Verlag, London.
38. Hale, J. (1997). Theory of Functional Differential Equations, Springer-Verlag, New York.
39. Jafarov, E.M. (2002). Design of new robust sliding mode observers for uncertain MIMO and SISO systems with and without time-delay. In Proc. of the 7th IEEE International Workshop on Variable Structure systems "Advances in Variable Structure systems" (Ed. Prof. Asif Sabanovic), Sarajevo, Bosnia and Herzegovina, 17-19 July, 2002, pp.105-114.
40. Jafarov, E.M. (1999). Robust sliding mode observer for uncertain MIMO systems with time-delay. In Proc. of the IASTED International Conference Control and Applications, Banff, Canada, pp.572-577.
41. Krasovskii, N.N. (1959). Some Problems in the Theory of Stability of Motion, Phismath, Moscow (in Russian).
42. Lyapunov, A.M. (1966). Stability of Motion, Academic Press, New York.
43. Mahmoud, M.S. and Al-Muthairi, N.F. (1994). Design of robust controllers for time-delay systems. IEEE Trans. Automatic Control, vol. AC-39, no. 5, pp. 995-999.
44. Oh, S. and Khalil, K.H. (1995). Output feedback stabilization using variable structure control. International Journal of Control, vol. 62, pp. 831-848.
45. Pearson, A. and Fiagbedzi, Y.A. (1989). An observer for time-delay systems. IEEE Transactions an Automatic Control, vol. AC-34, no 7, pp. 775-787.
46. Razumikhin, B.S. (1956). On the stability of systems with a delay. Prikl. Mat. Mekh., vol.20, iss. 4, pp. 500-512, (in Russian).
47. Shyu, K.K. and Yan, J.J. (1993).Robust stability of uncertain time-delay systems and its stabilization by variable structure control. International Journal of Control, vol.57, no. 1, pp.237-246.
48. Utkin, V.I. (1992). Sliding Modes in Control and Optimization. Springer-Verlag, Berlin.
49. Utkin, V.I. (1981). Identification principles using sliding modes. Dokl. AN SSSR, 257, no.3, pp.558-561, (in Russian).
50. Walcott, B.L., Corless, M.J. and Zak, S.H. (1987). Comparative study of non-linear state-observation techniques. International Journal of Control, vol. 45, no. 6, pp. 2109-2132.
51. Walcott, B.L., and Zak, S.H. (1988). Combined observer-controller synthesis for uncertain dynamical systems with applications. IEEE Trans. Syst. Man Cyber., vol. SMC-18, no.1, pp. 88-104.
52. Wang, Z. and Unbehauen, H. (2000). Nonlinear observers for a class of continuous-time uncertain state-delayed systems. International Journal of Systems Science, vol. 31, no. 5, pp. 555-562.
53. Wang, Z., Lam J. and Burnham, K.J. (2002). Stability analysis and observer design for neutral delay systems. IEEE Transactions on Automatic Control, vol. 47, no. 3, pp. 478-483.

Published by WSEAS Press
www.wseas.org
ISBN: 978-960-474-050-5
ISSN: 1790-5117

54. Zak, S.H., Walcott, B.L., and Hui, S. (1993). Variable structure control and observation of nonlinear/uncertain systems. Variable Structure Control for Robotics and Aerospace Applications Young, K.K.K (Editor), Amsterdam, Elsevier Science Publishers, BV, pp 59-88.
55. Jafarov, E.M. (2000). Robust sliding mode control for the uncertain MIMO aircraft model F-18. IEEE Transactions on Aerospace and Electronic Systems, Vol. 36, No. 4, pp.1127-1141.
56. Jafarov, E.M. and Tasaltin, R., Design of autopilot-output integral sliding mode controllers for guided missile systems with parameter perturbations, Aircraft Engineering and Aerospace Technology: An International Journal, vol. 73, no. 1, pp. 16-25, 2001.
57. Choi, H.H. (2004). An analysis and design method for uncertain variable structure systems with bounded controllers. IEEE Transactions an Automatic Control, vol. 49, no 4, pp. 602-607.
58. Yeh, F.K., Chien H.H. and Fu, L.C., Design of optimal midcourse guidance sliding mode control for missiles with TVC, IEEE Transactions on Aerospace and Electronic Systems, vol. 39, no. 3, pp. 824-837, 2003.
59. Singh, S.N., Steinberg, M.L. and Page, A.B., Nonlinear adaptive and sliding mode flight path control of F/A-18 model, IEEE Transactions on Aerospace and Electronic Systems, vol. 39, no. 4 pp. 1250-1262, 2003.
60. Sabanovic, A., Fridman L.M., and Spurgeon, S. (Editors), Variable Structure Systems: from Principles to Implementation, The IEE, London, 2004.
61. Transactions of the ASME, Journal of Dynamic Systems, Measurement, and Control, Special Issue on Variable Structure Systems, vol. 122, 2000.
62. International Journal of Control, Special Issue, Dedicated to Vadim Utkin, vol. 76, no. 9/10, 2003.
63. Cao, W.J. and Xu, J.X. (2004). Nonlinear integral-type sliding surface for both matched and unmatched uncertain systems. IEEE Transactions on Automatic Control, vol.49, no.8, pp. 1355-1360.
64. Edwards, C. and Spurgeon, S.K. (2000). On the limitations of some variable structure output feedback controller designs. Automatica, vol. 36, pp. 743-748.
65. Edwards, C., Spurgeon, S.K. and Hebden R. (2003). On the design of sliding output feedback controllers. International Journal of Control, vol. 76, no. 9/10, pp. 893-905.
66. Fridman, E., and Shaked, U. (2003). Delay-dependent stability and H∞ control: constant and time-varying delays. International Journal of Control, vol. 76, no. 1, pp. 48-60.
67. Gu, K., Kharitonov, V.L. and Chen, J. (2003). Stability of Time-Delay Systems. Birkhäuser: Boston.
68. Hale, J. and Verduyn-Lunel, S.M. (1993). Introduction to Functional Differential Equations, Springer-Verlag, New York.
69. Hong, J.L. (2004). A chain scattering matrix approach to the H∞ output feedback control for state-delayed systems. International Journal of Control, vol. 77, no. 16, pp. 1373-1381.
70. Jafarov, E.M. (2003). Delay-dependent stability and α-stability criterions for linear time-delay systems. WSEAS Transactions on Systems, Issue 4, Vol. 2, pp.1138-1147.
71. Jing, H.J., Tan, D.L. and Wang, Y.C. (2004). An LMI approach to stability of systems with severe time-delay. IEEE Transactions on Automatic Control, vol.49, no.7, pp. 1192-1195.
72. Niculescu, S.I. (2002), Delay Effects on Stability: A Robust Approach. New York: Springer-Verlag.
73. Richard, J.P. (2003). Time-delay systems: an overview of some recent advances and open problems. Automatica, vol. 39, pp. 1667-1694.
74. Yan, X.G., Edwards, C. and Spurgeon, S.K. (2004). Output feedback sliding mode control for non-minimum phase systems with non-linear disturbances. International Journal of Control, vol. 77, no. 15, pp. 1353-1361.

Published by WSEAS Press
www.wseas.org
ISBN: 978-960-474-050-5
ISSN: 1790-5117

CHAPTER 6

Stability Analysis and Control of Time-Delay Systems

This chapter consists of four sections. Section 6.1 considers delay-dependent stability and α-stability criterions for linear time-delay systems. Section 6.2 covers delay-dependent stabilization of input-delayed systems by linear control. A new design methodology is given. Section 6.3 develops delay-dependent stabilization of single input-delayed systems by continuous sliding mode control. A new design methodology is given. Section 6.4 considers robust stabilization of uncertain input-delayed systems by a new modified reduction method. An easy way is proposed.

6.1 Delay-dependent stability and α-stability criterions for linear time-delay systems

In this section, some improved delay-dependent stability conditions for linear time–delay systems are considered by using Leibniz-Newton formula and augmented, special augmented Lyapunov-Krasovskii functionals. The stability results depend on the size of the delay term and are given in terms of quadratic forms of state and some matrix inequalities. Four simple examples are considered systematically to illustrate and comparison analysis of various stability conditions. The upper bound of delay term is computed by solving of quasi-convex optimization problem. Stabilization by memory less control is considered as fifth example.

6.1.1 Introduction

It is well known that many delay-independent stability criteria exist for various time-delay systems based on Lyapunov-Krasovskii functional method [1]-[3], Razumikhin-Hale type theorem and matrix measures norms. However, recently, there are few delay-dependent results reported for linear delay systems. The brief review and analysis of various delay-dependent stability criterions have been considered, for example in [4]-[23].

In [4] the delay-dependent sufficient condition for the stability of linear uncertain time-delay systems has been derived by using Lyapunov-Razumikhin function approach. A time-delay term is presented via Leibniz-Newton formula by further substituting into primary system and later is evaluated by employing Razumikhin-Hale type theorem. However, it is not related to the system parameters, that is, it is not analytically checkable criterion. Furthermore, this result is somewhat conservative, especially in situations where delays are small.

Shyu and Yan have proposed [5] new delay-dependent robust α-stability criterion for uncertain time-delay systems by using standard Lyapunov function method. The time-delay term is evaluated by employing Razumikhin-Hale type theorem. The stability results are obtained in terms of matrix norm.

In [6] Niculescu has proposed new H_∞ memoryless control whit α-stability constrained for time-delay systems using Lyapunov-Krasovskii functional method combined with LMI's techniques. Note that, α-uniformly asymptotic stability implies uniformly asymptotic stability. However, if α=0, α-stability conditions becomes delay-independent as in [5].

In [7] the robust exponential delay-independent stability conditions have been derived for uncertain systems with time-varying delays by using Leibniz-Newton formula and matrix measure method. Delay-dependent robust stabilization of uncertain systems with time-varying multiple state delays has been considered in [8] by using Lyapunov-Razumikhin function method. As in [4], also in [8] the time-delay term is presented by using Leibniz-Newton formula with further substituting into the primary system and later is evaluated by employing Razumikhin-Hale type theorem; as a result the time-delay term appears. Finally, the stability criterion is obtained in terms of several LMI's, leading to less conservative results depending on the size of delay. The useful idea of Su and Huang dealing with the delay terms [4], is successfully used in [9] for robust decentralized stabilization of large-scale uncertain systems with state delays. Lyapunov-Krasovskii functional method combined with LMI's techniques is adopted. The stability results are depended on the size of the system delays and so they

Published by WSEAS Press
www.wseas.org
ISBN: 978-960-474-050-5
ISSN: 1790-5117

are less conservative than the Riccati equation approach results. In [10], discrete-delay-dependent conditions are derived for the robust stability of large-scale systems with after-effect by using Lyapunov-Razumikhin function combined with Leibniz-Newton formula. The stability results are obtained in terms of matrix norm. In [11], sufficient mixed delay-independent / delay-dependent stability conditions for linear systems with multiple state delays are derived in terms of LMI's. For the asymptotic stability analysis various standard and non-standard Lyapunov-Krasovskii functionals combined with some LMI's are used. This stability result improves analytically the previous results, where Razumikhin-Hale techniques including some supplementary constraints on the system and Lyapunov matrices are used. In [12] some new delay-dependent stability conditions for linear time delay systems with three main model transformations of the original system are obtained by using Lyapunov-Krasovskii functional method combined with Riccati matrix equations. Recently a new fourth descriptor model transformation was introduced for delay-dependent stability of neutral system in [13]. Unlike previous transformations, the descriptor model leads to an equivalent system. A new delay-dependent stability conditions for a system with time-varying delays in terms of LMI's is obtained in [14]. Park proposed [15] a new stability criterion based on improved upper bound and LMI's techniques for systems with uncertain delays. Lyapunov-Krasovskii functional introduced here involves three particular terms: standard Lyapunov function, standard Lyapunov-Krasovskii functional and the so–called non-standard functional including quadratic forms in terms of time-derivatives of state vectors for the h integration horizon [-h,0]. In this case also a delay term is presented by using Leibniz-Newton formula. An example showed that the proposed criterion performs much well than several existing criteria. However, these results have included many parameters and positive matrices that required frequent tuning.

In [16], [17] some recent stability and robust stability results for linear time-delay systems have been outlined. Two specific delay-independent and delay-dependent stability problems are analyzed. Several: simple α-stability and robust stability criterions for linear systems with time-delay are proposed by Niculescu, Verriest, Dugard and Dion using: 1) Lyapunov-Krasovskii functional method and 2) Lyapunov-Razumikhin function approach combined with Riccati-equation or LMI techniques.

Determination of augmented quadratic Lyapunov functionals depending on unknown continuously differentiable matrix functions for linear time-delay systems is considered in [18]. For determination of $V(x(\theta))$ some sufficient conditions in terms of ordinary and partial differential equations are obtained. Note that, in [18] any sufficient conditions especially in terms of linear matrix inequalities for the stability of time-delay system have not been considered. Repin approach is very interesting, but as pointed in [18], is very difficult because of solving ordinary and partial differential equations. A general way for constructing Lyapunov-Krasovskii functionals with constant quadratic matrices is developed in [1]-[3] etc.

In this paper, some new improved delay-dependent stability and α-stability conditions for linear time-delay systems are derived similar to the stability criteria [1]-[3], [12], [16]-[17], [20] by introducing augmented and special augmented Lyapunov-Krasovskii functionals combined with Leibniz-Newton formula and some matrix inequalities techniques.

6.1.2 System transformation and preliminaries

Consider the following linear time-delay system

$$\begin{aligned} \dot{x}(t) &= Ax(t) + Bx(t-h), && t > 0 \\ x(t) &= \phi(t), && -h \le t \le 0 \end{aligned} \tag{6.1.1}$$

where $x(t) \in R^n$ is the state vector, A and B are known constant matrices with appropriate dimensions, h is constant delay, but bounded $0 < h \le \bar{h}$, it is assumed that change rate of delay is slow, that is $\dot{h}(t) \approx 0$, $\phi(t)$ is smooth vector-valued initial function in $-h \le t \le 0$.

Our aim is to derive some delay-dependent stability conditions for (6.1.1) when delay h is known. If we consider a case where h is unknown then we assume that h is bounded. In this case stability problem can be formulated as: find the upper bound $\bar{h}$ on the delay such that the asymptotic stability of time-delay system (1) is preserved for any positive delay smaller than the upper bound.

Published by WSEAS Press
www.wseas.org
ISBN: 978-960-474-050-5
ISSN: 1790-5117

6.1.2.1 α-stability conditions

First let us consider a simple α-stability criterion [6], [16], [20] by using standard Lyapunov-Krasovskii functional combined with the some matrix inequality techniques. In further we shall compare our improved stability results with this.

Theorem 1 **[6], [16], [20]*:*** The linear time-delay system (6.1.1) is delay-independent asymptotically α-stable if there exist symmetric and positive-definite matrices P and R satisfying the following matrix inequality:

$$H = \begin{bmatrix} A^T P + PA + 2\alpha P + R & e^{\alpha h} PB \\ B^T P e^{\alpha h} & -R \end{bmatrix} < 0 \tag{6.1.2a}$$

or its Schur complement

$$H = A^T P + PA + 2\alpha P + R + e^{2\alpha h} PBR^{-1} B^T P < 0 \tag{6.1.2b}$$

***Proof*:** Utilize the following state transformation

$$z(t) = e^{\alpha t} x(t), \quad \alpha > 0 \quad t > 0 \tag{6.1.3}$$

to transform (1) into following model form

$$\dot{z}(t) = \alpha e^{\alpha t} x(t) + e^{\alpha t} \dot{x}(t) = (A + \alpha I) z(t) + e^{\alpha h} Bz(t-h) \tag{6.1.4}$$

Then, choose standard Lyapunov-Krasovskii functional as

$$V(z(t), z(t-h)) = z^T(t) P z(t) + \int_{t-h}^{t} z^T(\theta) R\, z(\theta)\, d\theta \tag{6.1.5}$$

where P and R are symmetric and positive-definite matrices. The time-derivative of (6.1.5) along the trajectory of transformed system (6.1.4) is given by:

$$\begin{aligned} \dot{V} &= z^T(t)\left[(A + \alpha I)^T P + P(A + \alpha I)\right] z(t) + 2z^T(t) e^{\alpha h} PBz(t-h) + z^T(t) Rz(t) - z^T(t-h) Rz(t-h) \\ &= \begin{bmatrix} z(t) \\ z(t-h) \end{bmatrix}^T \begin{bmatrix} A^T P + PA + 2\alpha P + R & e^{\alpha h} PB \\ B^T P e^{\alpha h} & -R \end{bmatrix} \begin{bmatrix} z(t) \\ z(t-h) \end{bmatrix} < 0 \end{aligned} \tag{6.1.6}$$

if satisfied (6.1.2). Therefore, the system (6.1.1) is asymptotically α-stable.

If we consider a case where h is unknown but bounded, then the upper bound of delay $\bar{h}$ can be computed by solving the following optimization problem:

OP: maximize h
Subject to H < 0 (2)
and P > 0, R > 0

which is a standard quasi-convex optimization problem. Hence, it is possible to compute the maximum upper bound $\bar{h}$ using efficient convex optimization algorithm [22], [8] etc.

Note that in this case a delay term appears in (6.1.6) at once and can be determined from (6.1.2) as a solution of transcendental matrix inequality. However, if α=0 or in small values of h or α, α-stability condition does not depend on the size of delay. To avoid this difficulty, we will consider below another stability criterion based on augmented Lyapunov-Krasovskii functional combined with LMI's techniques.

Example 1: Let us consider the following familiar form [1]-[3], [16] a first-order delay-differential system

$$\dot{x}(t) = -ax(t) - bx(t-h) \tag{6.1.7}$$

where a and b are scalar constants, h > 0.

Utilize (6.1.3), system (6.1.7) can be transformed into

$$\dot{z}(t) = (\alpha - a) z(t) - be^{\alpha h} z(t-h) \tag{6.1.8}$$

Choose Lyapunov-Krasovskii functional for (6.1.8) as

$$V(z(t), z(t-h)) = \frac{1}{2} z^2(t) + \mu \int_{t-h}^{t} z^2(\theta) d\theta \tag{6.1.9}$$

where μ > 0 to be selected.

Then

Published by WSEAS Press
www.wseas.org
ISBN: 978-960-474-050-5
ISSN: 1790-5117

$$\dot{V} = (\alpha - a + \mu)z^2(t) - e^{\alpha h} z(t)z(t-h) - \mu z^2(t-h) = -\begin{bmatrix} z(t) \\ z(t-h) \end{bmatrix}^T \begin{bmatrix} a-\alpha-\mu & \frac{1}{2}e^{\alpha h} \\ \frac{1}{2}e^{\alpha h} & \mu \end{bmatrix} \begin{bmatrix} z(t) \\ z(t-h) \end{bmatrix} < 0 \qquad (6.1.10)$$

if the following Sylvester's conditions hold

$a - \alpha > \mu > 0$

$$|H| = (a - \alpha - \mu)\mu - \frac{1}{4}e^{2\alpha h} > 0 \qquad (6.1.11)$$

Therefore (6.1.8) is asymptotically α-stable.

If we consider case where h is unknown but bounded we can solve a convex OP for (6.1.11):

$$\frac{\partial |H|}{\partial \mu} = a - \alpha - 2\mu = 0, \qquad (6.1.12)$$

Hence $\mu = \frac{a-\alpha}{2}$ and max $|H| = \frac{(a-\alpha)^2 - e^{2\alpha h} b^2}{4} > 0$ from which stability conditions are obtained as

$$(a-\alpha)^2 > e^{2\alpha h} b^2 \qquad (6.1.13)$$

Then the upper bound of delay size is given by

$$\bar{h} = \frac{\ln \frac{a-\alpha}{b}}{\alpha}, \qquad (6.1.14)$$

Thus, system (6.1.7) is α-stable for any $0 < h \le \bar{h}$ if condition (6.1.14) hold.

6.1.2.2 Stability conditions

***Theorem 2* [20]:** The linear time-delay system (6.1.1) is asymptotically stable if there exist symmetric and positive-definite matrices P, R and Q satisfying the following matrix inequality

$$H = \begin{bmatrix} A^T P + PA + R + hQ & PB \\ B^T P & -R \end{bmatrix} < 0$$

(6.1.15a)

or its Schur complement

$$H = A^T P + PA + R + hQ + PBR^{-1}B^T P < 0$$

(6.1.15b)

***Proof*:** Construct augmented Lyapunov-Krasovskii functional candidate as follows

$$V(x(t), x(t-h)) = x^T(t)Px(t) + \int_{t-h}^{t} x^T(\theta)Rx(\theta)d\theta + \int_{-h}^{0}\int_{t+\beta}^{t} x^T(\rho)Qx(\rho)d\rho\, d\beta \qquad (6.1.16)$$

The time-derivative of (16) along (1) is given by

$$\dot{V} = x^T(t)(A^T P + PA)x(t) + 2x^T(t)PBx(t-h) + x^T(t)Rx(t)$$

$$- x^T(t-h)Rx(t-h) + hx^T(t)Qx(t) - \int_{t-h}^{t} x^T(\beta)Qx(\beta)d\beta$$

$$= \begin{bmatrix} x(t) \\ x(t-h) \end{bmatrix}^T \begin{bmatrix} A^T P + PA + R + hQ & PB \\ B^T P & -R \end{bmatrix} \begin{bmatrix} x(t) \\ x(t-h) \end{bmatrix} - \int_{t-h}^{t} x^T(\beta)Qx(\beta)d\beta \qquad (6.1.17)$$

Since the last term in (6.1.17) is positive-definite, then

$$\dot{V} \le \begin{bmatrix} x(t) \\ x(t-h) \end{bmatrix}^T H \begin{bmatrix} x(t) \\ x(t-h) \end{bmatrix} < 0 \qquad (6.1.18)$$

if satisfied (6.1.15). Therefore, system (6.1.1) is asymptotically stable.

Example 2: Again consider a simple time-delay system (6.1.7). Choose augmented Lyapunov-Krasovskii functional for (6.1.7) as

$$V[x(t), x(t-h)] = \frac{1}{2}x^2(t) + \mu \int_{t-h}^{t} x^2(\theta)d\theta + \rho \int_{-h}^{0}\int_{t+\beta}^{t} x^2(\gamma)d\gamma\, d\beta \qquad (6.1.19)$$

Published by WSEAS Press
www.wseas.org
ISBN: 978-960-474-050-5
ISSN: 1790-5117

where μ and ρ are positive scalars to be selected.
Then

$$\dot{V} = -(a-\mu)x^2(t) - bx(t)x(t-h) - \mu x^2(t-h) + \rho h x^2(t) - \rho\int_{t-h}^{t} x^2(\beta)d\beta$$

$$= -\begin{bmatrix} x(t) \\ x(t-h) \end{bmatrix}^T \begin{bmatrix} a-\mu-\rho h & \frac{1}{2}b \\ \frac{1}{2}b & \mu \end{bmatrix} \begin{bmatrix} x(t) \\ x(t-h) \end{bmatrix} - \rho\int_{t-h}^{t} x^2(\beta)d\beta < 0 \qquad (6.1.20)$$

if the following conditions hold

$a-\mu-\rho h > 0, \quad \mu > 0, \rho > 0$

$$|H| = (a-\mu-\rho h)\mu - \frac{1}{4}b^2 > 0 \qquad (6.1.21)$$

Therefore, (6.1.1) is asymptotically stable.
If we consider a case where h is unknown but bounded then we can solve a convex optimization problem for (6.1.21).

Select $\rho = \mu$, then $\mu < \frac{a}{1+h}$ and from $|H| = a\mu - (1+h)\mu^2 - \frac{1}{4}b^2$ we have $\frac{\partial|H|}{\partial\mu} = a - 2(1+h)\mu = 0$.

Hence $\mu = \frac{a}{2(1+h)}$. Substituting μ into (6.1.21), we have

$$\max |H| = \frac{a^2(1+h) - b^2(1+h)^2}{4(1+h)^2} > 0 \qquad (6.1.22)$$

Hence $a^2 > b^2(1+h)$ and $h < \frac{a^2-b^2}{b^2}$. Then the upper bounded of delay size is obtained as

$$\bar{h} = \frac{(a-b)(a+b)}{b^2} \qquad (6.1.23)$$

Thus, (6.1.7) is asymptotically stable for any $0 < h \le \bar{h}$ if (6.1.23) holds.
Comparison of (6.1.23) with (6.1.14) shows that the upper bound $\bar{h}_2$ for (6.1.23) is greater than that $\bar{h}_1$ for (14), i.e. $\bar{h}_2 > \bar{h}_1$.

6.1.2.3 Combined α-stability conditions

To use advantages of Theorem 1 and 2, let us combine those results as follows.
***Theorem 3*:** The linear time-delay system (6.1.1) is asymptotically α-stable if there exist symmetric and positive-definite matrices P, R and Q satisfying the following matrix inequality

$$H = \begin{bmatrix} A^TP + PA + 2\alpha P + R + hQ & e^{\alpha h}PB \\ B^TPe^{\alpha h} & -R \end{bmatrix} < 0 \qquad (6.1.24a)$$

or its Schur complement (6.1.24b)

$$H = A^TP + PA + 2\alpha P + R + hQ + e^{2\alpha h}PBR^{-1}B^TP < 0$$

***Proof*:** Choose augmented Lyapunov-Krasovskii functional for (6.1.4) as

$$V(z(t), z(t-h)) = z^T(t)Pz(t) + \int_{t-h}^{t} z^T(\theta)Rz(\theta)d\theta + \int_{-h}^{0}\int_{t+\beta}^{t} z^T(\rho)Qz(\rho)d\rho\, d\beta \qquad (6.1.25)$$

Then

$$\dot{V} = z^T(t)\left[(A+\alpha I)^TP + P(A+\alpha I)\right]z(t) + 2z^T(t)e^{\alpha h}PBz(t-h) + z^T(t)Rz(t)$$

$$-z^T(t-h)Rz(t-h) + hz^T(t)Qz(t) - \int_{t-h}^{t} z^T(\beta)Qz(\beta)d\beta \qquad (6.1.26)$$

$$= \begin{bmatrix} z(t) \\ z(t-h) \end{bmatrix}^T \begin{bmatrix} A^TP + PA + 2\alpha P + R + hQ & e^{\alpha h}PB \\ B^TPe^{\alpha h} & -R \end{bmatrix} \begin{bmatrix} z(t) \\ z(t-h) \end{bmatrix} - \int_{t-h}^{t} z^T(\beta)Qz(\beta)d\beta \le \begin{bmatrix} z(t) \\ z(t-h) \end{bmatrix}^T H \begin{bmatrix} z(t) \\ z(t-h) \end{bmatrix} < 0$$

Published by WSEAS Press
www.wseas.org
ISBN: 978-960-474-050-5
ISSN: 1790-5117

if satisfied (6.1.24). Therefore, the transformed system (6.1.4) is asymptotically α-stable. Clearly that feasible set of (6.1.24b) is always larger than that of (6.1.2b) and (6.1.15b).

6.1.3 Improved stability conditions

Below some improved delay-dependent stability conditions are derived by introducing special augmented Lyapunov-Krasovskii functional combined with Leibniz-Newton formula and some matrix inequality techniques and some integral evaluating inequalities.

***Theorem 4*:** The linear time-delay system (6.1.1) is asymptotically stable if there exist symmetric and positive-definite matrices P, R and Q satisfying the following matrix inequality

$$H = (A+B)^T P + P(A+B) + h[Q + R + PBAQ^{-1}A^T B^T P + PBBR^{-1}B^T B^T P] < 0$$

(6.1.27a)

or alternative

$$H = \begin{bmatrix} (A+B)^T P + P(A+B) + h(Q+R) & -PBA & -PBB \\ -(PBA)^T & -\frac{1}{h}Q & 0 \\ -(PBB)^T & 0 & -\frac{1}{h}R \end{bmatrix} < 0 \qquad (6.1.27b)$$

***Proof*:** Since x(t) is continuously differentiable for $t \geq 0$, using the Leibniz-Newton formula, the time-delay term can be presented as

$$x(t-h) = x(t) - \int_{t-h}^{t} \dot{x}(\theta)d\theta \qquad (6.1.28)$$

for t > h. Then, the primary system (6.1.1) can be rewritten as

$$\dot{x}(t) = (A+B)x(t) - B\int_{t-h}^{t} \dot{x}(\theta)d\theta \qquad (6.1.29)$$

Substituting again (6.1.1) into (6.1.29) yields

$$\dot{x}(t) = (A+B)x(t) - B\int_{t-h}^{t} [Ax(\theta) + Bx(\theta-h)]d\theta = (A+B)x(t) - BA\int_{t-h}^{t} x(\theta)d\theta - BB\int_{t-h}^{t} x(\theta-h)d\theta \quad (6.1.30)$$

Let us choose a special augmented Lyapunov-Krasovskii functional as

$$V(x(t), x(t-h)) = V_1 + V_2 + V_3 = x^T(t)Px(t) + \int_{-h}^{0}\int_{t+\theta}^{t} x^T(\rho)Qx(\rho)d\rho\rho d + \int_{-h}^{0}\int_{t+\theta-h}^{t} x^T(\rho)Rx(\rho)d\rho\, d\theta \quad (6.1.31)$$

Introduced a special augmented functional (6.1.31) involves three particular terms: first term, V_1 is standard Lyapunov function, second and third non-standard terms, namely V_2 and V_3 are similar, except for the length integration horizon [t-h, t] for V_2 and [t+θ-h, t] for V_3, respectively. This functional is different from existing [12], [15], etc.

The time derivative of V_1 along of twice-transformed system (6.1.30) is calculated as follows

$$\dot{V}_1 = x^T(t)\left[(A+B)^T P + P(A+B)\right]x(t) - 2x^T(t)PBA\int_{t-h}^{t} x(\theta)d\theta - 2x^T(t)PBB\int_{t-h}^{t} x(\theta-h)d\theta \qquad (6.1.32)$$

Proposition 1: The following inequality holds

$$-2\int_{a}^{b} u^T v dt \leq \int_{a}^{b} u^T W u dt + \int_{a}^{b} u^T W^{-1} u dt \qquad (6.1.33)$$

for any vectors u, v and symmetric positive definite matrix W. Then

$$-2x^T(t)PBA\int_{t-h}^{t} x(\theta)d\theta = -2\int_{t-h}^{t} x^T(t)PBAx(\theta)d\theta$$

$$\leq \int_{t-h}^{t} x^T(t)PBAQ^{-1}A^T B^T Px(t)d\theta + \int_{t-h}^{t} x^T(\theta)Qx(\theta)d\theta = hx^T(t)PBAQ^{-1}A^T B^T Px(t) + \int_{t-h}^{t} x^T(\theta)Qx(\theta)d\theta \quad (6.1.34)$$

and similar to (6.1.34) we evaluate

Published by WSEAS Press
www.wseas.org
ISBN: 978-960-474-050-5
ISSN: 1790-5117

$$-2x^T(t)PBB\int_{t-h}^{t}x(\theta-h)d\theta \le hx^T(t)PBBR^{-1}B^TB^TPx(t)+\int_{t-h}^{t}x^T(\theta-h)Rx(\theta-h)d\theta \tag{6.1.35}$$

$\dot{V}_2$ is calculated as

$$\dot{V}_2=\int_{-h}^{0}\left[x^T(t)Qx(t)-x^T(t+\theta)Qx(t+\theta)\right]d\theta = hx^T(t)Qx(t)-\int_{t-h}^{t}x^T(\theta)Qx(\theta)d\theta \tag{6.1.36}$$

Then

$$\dot{V}_3 = hx^T(t)Rx(t)-\int_{t-h}^{t}x^T(\theta-h)Rx(\theta-h)d\theta \tag{6.1.37}$$

As seen from (6.1.35) the positive term $\int_{t-h}^{t}x^T(\theta-h)Rx(\theta-h)d\theta$ appears in the right side of (6.1.35). Third functional V_3 is introduced to cancel this term. Moreover, for the sake of simplicity and accordance of results in matrix inequalities (6.1.34) and (6.1.35), it was assumed that W = Q and W = R in both cases, respectively. Thus, $\dot{V}$ is obtained as follows:

$$\begin{aligned}\dot{V}&=\dot{V}_1+\dot{V}_2+\dot{V}_3=x^T(t)\left[(A+B)^TP+P(A+B)+h(Q+R+PBAQ^{-1}A^TB^TP+PBBR^{-1}B^TB^TP)\right]x(t)\\&=x^T(t)Hx(t)<0\end{aligned} \tag{6.1.38}$$

if satisfied (6.1.27a). Therefore, system (6.1.30) is asymptotically stable. First part of the Tearoom 4 is proved.

Now let us prove the second part of Theorem 4 when (6.1.27b) is satisfied. From (6.1.32), (6.1.36) and (6.1.38) $\dot{V}$ can be calculated as

$$\begin{aligned}\dot{V}&=x^T(t)\left[(A+B)^TP+P(A+B)\right]x(t)-2x^T(t)PBA\int_{t-h}^{t}x(\theta)d\theta-2x^T(t)PBB\int_{t-h}^{t}x(\theta-h)d\theta+hx^T(t)Qx(t)\\&-\int_{t-h}^{t}x^T(\theta)Qx(\theta)d\theta+hx^T(t)Rx(t)-\int_{t-h}^{t}x^T(\theta-h)Rx(\theta-h)\,d\theta\end{aligned} \tag{6.1.39}$$

Proposition 2: The following inequalities hold for any delay h and positive-definite matrix Q

$$\int_{t-h}^{t}x^T(\theta)Qx(\theta)d\theta \ge \left[\int_{t-h}^{t}x(\theta)d\theta\right]^T Q\left[\int_{t-h}^{t}x(\theta)d\theta\right] \tag{6.1.40}$$

if $h \le 1$, and

$$h\int_{t-h}^{t}x^T(\theta)Qx(\theta)d\theta \ge \left[\int_{t-h}^{t}x(\theta)d\theta\right]^T Q\left[\int_{t-h}^{t}x(\theta)d\theta\right] \tag{6.1.41}$$

if h > 1.

Proof: The proof of this proposition is based on the definite integral evaluating theorem [24], [25]:

$$m(b-a)<\int_{a}^{b}f(x)dx<M(b-a)\,, \qquad a<b \tag{6.1.42}$$

where m and M minimum and maximum values of a continuous function f(x) on the closed interval [a,b]: $m \le f(x) \le M$.

Since

$$\lambda_{min}(Q)\int_{t-h}^{t}x^T(\theta)x(\theta)d\theta<\int_{t-h}^{t}x^T(\theta)Qx(\theta)d\theta<\lambda_{max}(Q)\int_{t-h}^{t}x^T(\theta)x(\theta)d\theta \tag{6.1.43}$$

$$\begin{aligned}\lambda_{min}(Q)\left[\int_{t-h}^{t}x(\theta)d\theta\right]^T\left[\int_{t-h}^{t}x(\theta)d\theta\right]&<\left[\int_{t-h}^{t}x(\theta)d\theta\right]^T Q\left[\int_{t-h}^{t}x(\theta)d\theta\right]\\&<\lambda_{max}(Q)\left[\int_{t-h}^{t}x(\theta)d\theta\right]^T\left[\int_{t-h}^{t}x(\theta)d\theta\right]\end{aligned} \tag{6.1.44}$$

Published by WSEAS Press
www.wseas.org
ISBN: 978-960-474-050-5
ISSN: 1790-5117

and

$$m \le x \le \|x\| = M, \qquad 0 < x^T x \le M^2 \tag{6.1.45}$$

then clearly that

$$0 < \int_{t-h}^{t} x^T(\theta)x(\theta)d\theta < M^2 h \qquad \text{and} \qquad 0 < \left[\int_{t-h}^{t} x(\theta)d\theta\right]^T \left[\int_{t-h}^{t} x(\theta)d\theta\right] < M^2 h^2 \tag{6.1.46}$$

Therefore, from comparison of (6.1.43) and (6.1.44) we conclude that the condition (6.1.40) holds if $h \le 1$ because $M^2 h > M^2 h^2$ and the condition (6.1.41) holds if $h > 1$ because $h \cdot M^2 h \ge M^2 h^2$. Using Proposition 2 for last integral terms of (6.1.39) we can rewrite

$$\dot{V} = x^T(t)\left[(A+B)^T P + P(A+B) + h(Q+R)\right]x(t) - 2x^T(t)PBA\int_{t-h}^{t} x(\theta)d\theta - 2x^T(t)PBB\int_{t-h}^{t} x(\theta-h)d\theta$$

$$-\frac{1}{h}\left[\int_{t-h}^{t} x(\theta)d\theta\right]^T Q\left[\int_{t-h}^{t} x(\theta)d\theta\right] - \frac{1}{h}\left[\int_{t-h}^{t} x(\theta-h)d\theta\right]^T R\left[\int_{t-h}^{t} x(\theta-h)d\theta\right] \tag{6.1.47}$$

Note that for the case where $h \le 1$ in according to (6.1.40) the factor $\frac{1}{h}$ in two last terms of (6.1.47) disappears.

Thus, we can rearrange (6.1.47) as a full quadratic form of three integral variables as follows:

$$\dot{V} \le \begin{bmatrix} x(t) \\ \int_{t-h}^{t} x(\theta)d\theta \\ \int_{t-h}^{t} x(\theta-h)d\theta \end{bmatrix}^T \begin{bmatrix} (A+B)^T P + P(A+B) + h(Q+R) & -PBA & -PBB \\ -(PBA)^T & -\frac{1}{h}Q & 0 \\ -(PBB)^T & 0 & -\frac{1}{h}R \end{bmatrix} \begin{bmatrix} x(t) \\ \int_{t-h}^{t} x(\theta)d\theta \\ \int_{t-h}^{t} x(\theta-h)d\theta \end{bmatrix} < 0 \tag{6.1.48}$$

if satisfied (6.1.27b). Second part of theorem is proved. This stability criterion can be called as "three integral variables criterion" because of (6.1.48). This approach provided more deeply investigation of the internal structure of time delay systems.

Note that, H in (6.1.48) is more informative than that in previous cases because H in (6.1.48) contains much parameter than that in previous criteria.

Example 3: Again consider simple time delay system (6.1.7)

$$\dot{x}(t) = -ax(t) - bx(t-h) \tag{6.1.49a}$$

with auxiliary equation

$$\dot{x}(\theta) = -ax(\theta) - bx(\theta-h) \tag{6.1.49b}$$

Substituting Leibniz-Newton formula

$$x(t-h) = x(t) - \int_{t-h}^{t} \dot{x}(\theta)d\theta \tag{6.1.50}$$

into (49a) with (49b) we obtain

$$\dot{x}(t) = -(a+b)x(t) - ab\int_{t-h}^{t} x(\theta)d\theta - b^2\int_{t-h}^{t} x(\theta-h)d\theta \tag{6.1.51}$$

Choose a special augmented Lyapunov-Krasovskii functional for (51) as

$$\dot{V}(x(t), x(\theta), x(\theta-h)) = x^2(t) + \mu\int_{-h}^{0}\int_{t+\theta}^{t} x^2(\beta)d\beta\, d\theta + \rho\int_{-h}^{0}\int_{t+\theta-h}^{t} x^2(\gamma)d\gamma\, d\theta \tag{6.1.52}$$

where μ and ρ are positive scalars to be selected.

Then

Published by WSEAS Press
www.wseas.org
ISBN: 978-960-474-050-5
ISSN: 1790-5117

$$\dot{V} = 2x(t)\dot{x}(t) + \mu h x^2(t) - \mu \int_{t-h}^{t} x^2(\theta)d\theta + \rho h x^2(t) - \rho \int_{t-h}^{t} x^2(\theta - h)d\theta = -2(a+b)x^2(t)$$
$$- 2abx(t)\int_{t-h}^{t} x(\theta)d\theta - 2b^2 x(t)\int_{t-h}^{t} x(\theta - h)d\theta + \mu h x^2(t) - \mu \int_{t-h}^{t} x^2(\theta)d\theta + \rho h x^2(t) - \rho \int_{t-h}^{t} x^2(\theta - h)d\theta \quad (6.1.53)$$

Using integral evaluating of (6.1.34) and (6.1.35)

$$-2x(t)\int_{t-h}^{t} x(\theta)d\theta \le h x^2(t) + \int_{t-h}^{t} x^2(\theta)d\theta \quad (6.1.54)$$

$$-2x(t)\int_{t-h}^{t} x(\theta - h)d\theta \le h x^2(t) + \int_{t-h}^{t} x^2(\theta - h)d\theta \quad (6.1.55)$$

from (6.1.53) we have

$$\dot{V} \le -2(a+b)x^2(t) + abhx^2(t) + ab\int_{t-h}^{t} x^2(\theta)d\theta + b^2 h x^2(t) + b^2 \int_{t-h}^{t} x^2(\theta - h)d\theta$$
$$+ \mu h x^2(t) - \mu \int_{t-h}^{t} x^2(\theta)d\theta + \rho h x^2(t) - \rho \int_{t-h}^{t} x^2(\theta - h)d\theta \quad (6.1.56)$$

If we select $\rho = b^2$ and $\mu = ab$, then (6.1.56) reduced to $\dot{V} \le -\left[2(a+b) + 2abh - 2b^2 h\right]x^2(t) < 0$

if $H = 2(a+b) - 2bh(a+b) > 0$ or $bh < 1$, $a + b > 0$ (6.1.57)

Thus, (6.1.49) is asymptotically stable if

$a + b > 0$, $bh < 1$, $\rho = b^2$ and $\mu = ab$ (6.1.58)

If we consider a case where h is unknown but bounded then the upper bound $\bar{h}$ can be obtained from (6.1.58) as

$\bar{h} = \frac{1}{b}$ and $a + b > 0$, $\rho = b^2$, $\mu = ab$ (6.1.59)

Therefore, we conclude that (6.1.49) is asymptotically stable for any $0 < h \le \bar{h}$ if (6.1.59) hold.

Example 4: For comparison analysis let us investigate the same problem by using the second part of Theorem 4.

Thus, we have (6.1.49)-(6.1.53). Using the properties of (6.1.40) and (6.1.41) we can evaluate for (6.1.53)

$$-\mu \int_{t-h}^{t} x^2(\theta)d\theta \le -\frac{1}{h}\mu\left[\int_{t-h}^{t} x(\theta)d\theta\right]^2 \quad (6.1.60)$$

$$-\rho \int_{t-h}^{t} x^2(\theta - h)d\theta \le -\frac{1}{h}\rho\left[\int_{t-h}^{t} x(\theta - h)d\theta\right]^2 \quad (6.1.61)$$

Then (6.1.53) becomes

$$\dot{V} \le -\left[2(a+b) - \rho h - \mu h\right]x^2(t) - 2abx(t)\int_{t-h}^{t} x^2(\theta)d\theta - 2b^2 x(t)\int_{t-h}^{t} x^2(\theta - h)d\theta - \frac{1}{h}\mu\left[\int_{t-h}^{t} x(\theta)d\theta\right]^2$$
$$-\frac{1}{h}\rho\left[\int_{t-h}^{t} x(\theta - h)d\theta\right]^2 = -\begin{bmatrix} x(t) \\ \int_{t-h}^{t} x(\theta)d\theta \\ \int_{t-h}^{t} x(\theta - h)d\theta \end{bmatrix}^T \begin{bmatrix} 2(a+b) - \rho h - \mu h & ab & b^2 \\ ab & \frac{1}{h}\mu & 0 \\ b^2 & 0 & \frac{1}{h}\rho \end{bmatrix} \begin{bmatrix} x(t) \\ \int_{t-h}^{t} x(\theta)d\theta \\ \int_{t-h}^{t} x(\theta - h)d\theta \end{bmatrix} < 0 \quad (6.1.62)$$

if satisfied H > 0 for h > 1 or its principles minors are positive:

$|H_1| = 2(a+b) - \rho h - \mu h > 0, \quad \mu > 0, \quad \rho > 0$ (6.1.63)

Published by WSEAS Press
www.wseas.org
ISBN: 978-960-474-050-5
ISSN: 1790-5117

$$|H_2| = [2(a+b) - \rho h - \mu h]\frac{1}{h}\mu - a^2b^2 > 0 \tag{6.1.64}$$

$$|H_3| = |H| = [2(a+b) - \rho h - \mu h]\frac{1}{h^2}\mu\rho - a^2b^2 - \frac{1}{h}\mu b^4 - \frac{1}{h}\rho a^2 b^2 > 0 \tag{6.1.65}$$

Thus (6.1.49) is asymptotically stable for h > 1 if (6.1.63) – (6.1.65) hold. If $h \le 1$ then we know that

$$H = \begin{bmatrix} 2(a+b) - \rho h - \mu h & ab & b^2 \\ ab & \mu & 0 \\ b^2 & 0 & \rho \end{bmatrix} > 0 \tag{6.1.66}$$

or

$$|H_1| = 2(a+b) - \rho h - \mu h > 0, \quad \mu > 0, \quad \rho > 0 \tag{6.1.67}$$

$$|H_2| = [2(a+b) - \rho h - \mu h]\mu - a^2b^2 > 0 \tag{6.1.68}$$

$$|H_3| = |H| = [2(a+b) - \rho h - \mu h]\mu\rho - a^2b^2 - \mu b^4 - \rho a^2 b^2 > 0 \tag{6.1.69}$$

Thus, (6.1.49) is asymptotically stable for $h \le 1$ if (6.1.66) or (6.1.67) – (6.1.69) hold.
Now let us consider a case where h is unknown but bounded. Then the upper bound of h can computed as follows for $h \le 1$.

Select $\mu = \rho$, then from (6.1.67) $2(a+b) > 2\mu h > 0$ and $\mu < \frac{a+b}{h}$ where $a+b > 0$, $|H_2| = 2(a+b)\mu - 2\mu^2 h - a^2b^2$ and $\frac{\partial|H_2|}{\partial\mu} = 2(a+b) - 4\mu h = 0$.

Hence,

$$\mu = \frac{a+b}{2h} \tag{6.1.70}$$

$\max|H_2| = \frac{(a+b)^2 - 2a^2b^2h}{2h} > 0$ from which

$$h < \frac{(a+b)^2}{2a^2b^2} \tag{6.1.71}$$

and the upper bound is obtained as

$$\bar{h} = \frac{(a+b)^2}{2a^2b^2} \text{ with } a+b > 0,\ ab > 0 \tag{6.1.72}$$

From (6.1.69)

$$|H_3| = [2(a+b) - 2\mu h]\mu^2 - \mu b^2(a+b) = \mu[2(a+b)\mu - 2\mu^2 h - b^2(a^2+b^2)] = \mu|\overline{H}_3| > 0$$

$\frac{\partial|\overline{H}_3|}{\partial\mu} = 2(a+b) - 4\mu h = 0$. Hence $\mu = \frac{a+b}{2h}$ which coincide with (6.1.70).

Then, $\max|H_2| = \frac{(a+b)^2 - 2b^2(a^2+b^2)h}{2h} > 0$ from which $h < \frac{(a+b)^2}{2b^2(a^2+b^2)}$ and the upper bound can found as

$$\bar{h} = \frac{(a+b)^2}{2b^2(a^2+b^2)} \tag{6.1.73}$$

Clearly that the $\bar{h}$ (6.1.73) less than $\bar{h}$ (6.1.72). Therefore, the upper bound of delay size can found from (6.1.73).

6.1.4 Improved α-stability conditions

Using Leibniz-Newton formula

Published by WSEAS Press
www.wseas.org
ISBN: 978-960-474-050-5
ISSN: 1790-5117

$$z(t-h) = z(t) - \int_{t-h}^{t} \dot{z}(\theta)d\theta \tag{6.1.74}$$

we can rewrite transformed time-delay system (6.1.4) as

$$\dot{z}(t) = (A + \alpha I)z(t) + e^{\alpha h}Bz(t-h) = (A + e^{\alpha h}B + \alpha I)z(t) - e^{\alpha h}B\int_{t-h}^{t} \dot{z}(\theta)\, d\theta$$

$$= (A + e^{\alpha h}B + \alpha I)z(t) - e^{\alpha h}B(A + \alpha I)\int_{t-h}^{t} z(\theta)d\theta - e^{2\alpha h}BB\int_{t-h}^{t} z(\theta - h)\, d\theta \tag{6.1.75}$$

The following theorem summarizes our improved α-stability result.

***Theorem 5*:** The linear transformed time-delay system (6.1.75) is asymptotically α-stable if there exist symmetric and positive-definite matrices P, R and Q satisfying the following matrix inequality

$$\begin{aligned} H^* &= (A + e^{\alpha h}B + \alpha I)^T P + P(A + e^{\alpha h}B + \alpha I) \\ &+ h\left[Q + R + e^{\alpha h}PB(A + \alpha I)Q^{-1}(A + \alpha I)B^T P + e^{2\alpha h}PBBR^{-1}B^T B^T P\right] < 0 \end{aligned} \tag{6.1.76}$$

***Proof*:** Choose a special augmented Lyapunov-Krasovskii functional as

$$V(z(t), z(t-h)) = z^T(t)Pz(t) + \int_{-h}^{0}\int_{t+\theta}^{t} z^T(\rho)Qz(\rho)d\rho\, d\theta + \int_{-h}^{0}\int_{t+\theta-h}^{t} z^T(\rho)Rz(\rho)d\rho\, d\theta \tag{6.1.77}$$

The time-derivative of (6.1.77) along the transformed system (6.1.75) is given by

$$\dot{V} = z^T(t)\left[(A + e^{\alpha h}B + \alpha I)^T P + P(A + e^{\alpha h}B + \alpha I)\right]z(t) - 2z^T(t)e^{\alpha h}PB(A + \alpha I)\int_{t-h}^{t} z(\theta)d\theta$$

$$- 2z^T(t)e^{2\alpha h}PBB\int_{t-h}^{t} z(\theta - h)d\theta + hz^T(t)Qz(t) - \int_{t-h}^{t} z^T(\theta)Qz(\theta)d\theta + hz^T(t)Rz(t) - \int_{t-h}^{t} z^T(\theta - h)Rz^T(\theta - h)d\theta$$

$$\begin{aligned} &\le z^T(t)\Big\{(A + e^{\alpha h}B + \alpha I)^T P + P(A + e^{\alpha h}B + \alpha I) + h\Big[Q + R + e^{\alpha h}PB(A + \alpha I)Q^{-1}(A + \alpha I)^T B^T P \\ &+ e^{2\alpha h}PBBR^{-1}B^T B^T P\Big]\Big\}z(t) = z^T(t)H^* z(t) < 0 \end{aligned} \tag{6.1.78}$$

if satisfied (6.1.76). Therefore, system (6.1.75) is asymptotically α-stable if (6.1.76) hold.

If we consider a case where h is unknown but bounded we can solve a convex OP similar to case 2.1.

6.1.5 Stabilization by memoryless control

Now consider the following linear time-delay system with input delay

$$\dot{x}(t) = Ax(t) + Bx(t-h) + Du(t) + D_1 u(t-h) \tag{6.1.79}$$

where D and D_1 are constant ($n \times m$)-matrices, u(t) is m-control vector. For stabilization of (6.1.79) let us choose a memoryless feedback control law as

$$u(t) = -Kx(t) \tag{6.1.80}$$

where K is ($m \times n$)-design matrix.

Substituting (6.1.80) into (6.1.79) yields

$$\dot{x}(t) = \overline{A}x(t) + \overline{B}x(t-h) \tag{6.1.81}$$

where $\overline{A} = A - DK$ and $\overline{B} = B - D_1 K$ are (nxn)-matrices. Clearly that stability of the closed-loop system (81) can be easily analyzed by using obtained above stability criterions

Example 5: Consider the stabilization of first order time-delay system:

$$\dot{x}(t) = -ax(t) - bx(t-h) + cu(t) \tag{6.1.82}$$

where a,b and c are constant scalars, by employing following memoryless control

$$u(t) = kx(t) \tag{6.1.83}$$

where k is a design parameter.

Then closed-loop system is given by

$$\dot{x}(t) = -(a - kc)x(t) - bx(t-h) \tag{6.1.84}$$

Stability conditions (6.1.27b) of Theorem 4 for (6.1.84) are similar to (6.1.62) for h>1.

Published by WSEAS Press
www.wseas.org
ISBN: 978-960-474-050-5
ISSN: 1790-5117

$$H = \begin{bmatrix} 2(a - kc + b) - \rho h - \mu h & (a - kc)b & b^2 \\ (a - kc)b & \frac{1}{h}\mu & 0 \\ b^2 & 0 & \frac{1}{h}\rho \end{bmatrix} > 0 \qquad (6.1.85a)$$

or

$$|H_1| = 2(a - kc + b) - \rho h - \mu h > 0, \quad \mu > 0, \quad \rho > 0$$

$$|H_2| = [2(a - kc + b) - \rho h - \mu h]\frac{1}{h}\mu - (a - kc)^2 b^2 > 0 \qquad (6.1.85b)$$

$$|H_3| = |H| = [2(a - kc + b) - \rho h - \mu h]\frac{1}{h^2}\mu\rho - \frac{1}{h}\mu b^4 - \frac{1}{h}(a - kc)^2 b^2 > 0$$

Thus, closed-loop system (6.1.84) is asymptotically stable if (6.1.85) hold.
If we consider a case where h is unknown but bounded, then the upper bound of h can be computed as follows for h>1.

Select $\mu = \rho$, then from (6.1.85b) $2(a - kc + b) > 2\mu h > 0$ and $\mu < \frac{a - kc + b}{h}$ where $a - kc + b > 0$.

$$|H_2| = 2(a - kc + b)\frac{\mu}{h} - 2\mu^2 - (a - kc)^2 b^2$$

and $\frac{\partial |H_2|}{\partial \mu} = 2(a - kc + b)\frac{1}{h} - 4\mu = 0$

hence $\mu = \frac{a - kc + b}{2h}$ (6.1.86)

Then $\max|H_2| = \frac{(a - kc + b)^2 - 2h^2(a - kc)^2 b^2}{2h^2} > 0$

hence

$h < \frac{1}{\sqrt{2}}\frac{a - kc + b}{(a - kc)b}$ and the upper bound is found as

$$\bar{h} = \frac{1}{\sqrt{2}}\frac{a - kc + b}{(a - kc)b} \qquad (6.1.87)$$

Thus, closed-loop system (6.1.84) is asymptotically stable for any $0 < h \le \bar{h}$ if (6.1.87) hold. Note that, design parameter k can be selected such that the upper bound $\bar{h}_2$ for (6.1.87) greater than that $\bar{h}_1$ in (6.1.72), i.e. $\bar{h}_2 > \bar{h}_1$.

6.1.6 Conclusions

We have derived some improved delay-dependent stability conditions for linear time–delay systems by using Leibniz-Newton formula and augmented, special augmented Lyapunov-Krasovskii functionals. The stability results are depended on the size of the delay term and are given in terms of quadratic forms of state and some matrix inequalities, which are more informative and accurate. Four simple examples are considered systematically to illustrate and comparison analysis of derived stability conditions. The upper bound of delay term is computed by solving of quasi-convex optimization problem. Stabilization by memoryless control is considered as fifth example.

6.2 Delay-dependent stabilization of input-delayed systems by linear control: a new design methodology

A new design approach based on Lagrange mean value theorem is used for the first time for the stabilization of multivariable input-delayed system by linear controller. The delay–dependent asymptotical stability conditions are derived by using augmented Lyapunov-Krasovskii functionals and formulated in terms of conventional Lyapunov matrix equations and some simple matrix inequalities. Proposed design approach is extended to robust stabilization of multi-variable input

Published by WSEAS Press
www.wseas.org
ISBN: 978-960-474-050-5
ISSN: 1790-5117

delayed systems with unmatched parameter uncertainties. The maximum upper bound of delay size is computed by using simple optimization algorithm. A liquid monopropellant rocket motor with a pressure feeding system is considered as a numerical design example. Design example shows the effectiveness of our proposed design approach.

6.2.1 Introduction

Time-delay effect is frequently encountered in oil-chemical systems, metallurgy and machine-tool process control, nuclear reactors, bio-technical systems missile-guidance and aircraft control systems, aerospace remote control and communication control systems, etc. The presence of delay effect complicates the analysis and design of control systems. Moreover, time-delay effects in the state vector, especially in the control input degrade the control performances and make the closed–loop stabilization problem challenging. For better understanding of time-delay effect properties let us briefly analyze the existing design methodologies. There are three basic control design methodologies for the stabilization of input delayed systems:

1) Smith predictor method 2) Reduction method

3) Memoryless control approach.

A common design method of input-delayed systems is well known Smith predictor control to cancel the effect of time-delay. Smith predictor is a popular and very effective long delay compensator for stable processes. The main advantage of the Smith predictor control method is that, the time-delay is eliminated from the characteristic equation of the closed-loop system. Classical Smith predictor was suggested by Smith [26], [27]. Modified Smith predictor schemes have been advanced by Marshall [28], Aleviskas and Seborg [29], Watanabe and Ito [30], Watanabe, Ishiyama and Ito [31], Al-Sunni and Al-Nemer [32], Majhi and Atherton [33], etc.

Note that Smith Predictor removes only the time–delay from closed–loop while it is remained in feed-forward path. Therefore, it is also an input-delayed system. An extension of the Smith predictor method for the MIMO systems with state and input delays is considered by Alevisaxis and Seborg [29]. The control algorithm in a Smith Predictor is normally a PI-controller. The D–part normally is not used since the prediction is performed by the dead–time compensation. Prediction through derivation is not suitable when the process contains a long dead– time. Replacing a PID-controller with a Smith predictor gives a drastic increase in operational complexity. This is the main reason why most processes with long time–delay are still controlled by PI-controllers. A modified Smith predictor based on industrial PI-controller is designed by Hagglund [34]. A modified Smith predictor and controller for unstable processes with time–delay are developed by DePaor [35]. Modified Smith predictor control for multivariable systems with delays and unmeasurable disturbances is extended by Watanabe, Ishiyama and Ito [31]. Modified Smith predictor and controller design procedure for unstable processes is proposed by Majhi and Atherton [33]. A Smith predictor fuzzy logic based PI-controller design for processes with long dead–time is proposed by Al-Sunni and Al-Nemer [32].

The second important control design method of input–delayed systems is the reduction method that was suggested by Kwon and Pearson [36].

This control strategy has been shown to overcome some of inherent problems of the conventional Smith predictor method. For example, unstable system can be stabilized and the effects of the initial conditions are taken into consideration. The reduction method, however, suffers from a weakness that the complete reduction to a delay free system is only possible with an exact model of the system. Reduction method is extended to time–varying system with distributed delays by Arstein [37]. A new robust stabilizing controller for multiple input–delayed system with parametric uncertainties by using a modified reduction method is proposed by Moon, Park and Kwon [38]. However, an industrial implementation of reduction method controllers is much complicated than conventional method.

The third design approach to stabilization of input-delayed systems is so-called memoryless control method, which is similar to the conventional linear control method. Such controllers have feedback of the current state only, are designed to delay–independent stabilization of input–delayed systems by using Lyapunov–Krasovskii functional method, for example, see Choi and Chung [38], Kim, Jeung and Park [40], Su, Chu and Wang [41], etc. However, this approach is conservative when the actual size of the delay is small. In fact, information on the size of the delay is often available in many processes. Hence, by using delay information and past control history as well as the current state delay–dependent controllers may provide much better performance than memoryless controllers.

Published by WSEAS Press
www.wseas.org
ISBN: 978-960-474-050-5
ISSN: 1790-5117

In analysis and design of time-delay systems, in general, the Lyapunov-Krasovskii functional method is commonly used. Recent advances in time-delay systems are presented by Richard [42], Fridman and Shaked [43], Jafarov [44], Niculescu and Gu [45], Niculescu [46], Mahmoud [47], Gu, Kharitonov and Chen [48], Boukas and Liu [49]. Some sufficient delay-dependent stability conditions for linear delay perturbed systems are derived using exact Lyapunov-Krasovskii functionals by Kharitonov and Niculescu [50]. Several new LMI delay-dependent robust stability results for linear time-delay systems with unknown time-invariant delays by using Padé approximation are presented by Zhang, Knospe and Tsiotras [51]. Both delay-independent and delay-dependent robust stability LMI's from conditions for linear time-delay systems with unknown delays by using appropriately selected Lyapunov-Krasovskii functionals are systematically investigated by Zhang, Knospe and Tsiotras in another paper [52]. Stability of the internet network rate control with diverse delays based on Nyquist criterion is considered by Tian and Yang [53]. Improved delay-dependent stability conditions for time-delay systems in terms of strict LMI's avoiding cross terms are developed by Xu and Lam [54]. A new state transformation is introduced to exhibit the delay-dependent stability condition for time-delay systems by Mahmoud and Ismail [55]. Determining controllable sets from a time-delay description is given by Rhodes and Morari [56].
Resuming the brief analysis of references concerning the existing design approaches, it can be concluded that time-delay systems are intensively investigated recently by researchers in light of the above mentioned three directions. However, a new direction to stability analysis and controller design of time-delay systems is not developed. In this paper, we have attempted to present for discussion a principle new design approach to analysis and design of time-delay systems. Introduced new design approach may open a new direction in this field. Proposed design approach based on Lagrange mean value theorem is used for the first time for the stabilization of multivariable input delayed system. The delay–dependent asymptotical stability conditions are derived by using augmented Lyapunov-Krasovskii functionals and formulated in terms of conventional Lyapunov matrix equations and some simple matrix inequalities. Proposed design approach is extended to robust stabilization of multi-variable input delayed systems with unmatched parameter uncertainties. The maximum upper bound of delay size is computed by using simple optimization algorithm. A liquid monopropellant rocket motor with a pressure feeding system is considered as a numerical design example. Design example shows the effectiveness of our proposed design approach.

6.2.2 Delay-dependent stabilization by linear control

Let us consider the following control input-delayed multivariable system of the form:

$$\begin{aligned} \dot{x}(t) &= Ax(t) + Bu(t-h), \quad t > 0 \\ u(t) &= \phi(t), \qquad\qquad -h \le t \le 0 \end{aligned} \tag{6.2.1}$$

where $x(t)$ is the measurable state n-vector, $u(t)$ is the control input m–vector, in general $m \le n$, A is the unstable $(n \times n)$- matrix and B is the $(n \times m)$- matrix of full rank, $\phi(t)$ is known initial control function on interval $[-h,0]$, $h > 0$ is a constant time–delay. If we consider a case where h is an unknown, then we assume that h is bounded $0 \le h < \bar{h}$.
We assume that time–delay system is completely state controllable [57].
This design method is based on the Lagrange mean value theorem familiar from classical Calculus [58], [59]. Remember that Lagrange mean value theorem is stated as follows:

$$\frac{f(b) - f(a)}{b - a} = f'(\xi), \quad a < \xi < b \tag{6.2.2}$$

where $f(x)$ is a continuous function at every point of the closed interval [a, b] and differentiable at every point of its interior (a, b) or in terms of delayed control input

$$u(t-h) = u(t) - h\dot{u}(\theta) \tag{6.2.3}$$

where θ is a point in $t - h < \theta < t$.
After introducing the θ parameter, the constructive delay-dependent asymptotical stability and robustly asymptotically stable conditions can be derived by using the augmented Lyapunov-Krasovskii functionals.
Now, after preparing the necessary background we can present a new continuous control design methodology for input-delayed systems with known or unknown but bounded delays.

Published by WSEAS Press
www.wseas.org
ISBN: 978-960-474-050-5
ISSN: 1790-5117

Substituting (3) into (1), the input-delayed system can be transformed to following system:

$$\dot{x}(t) = Ax(t) + Bu(t) - Bh\dot{u}(\theta) \tag{6.2.4}$$

Now we can utilize the conventional linear controller

$$u(t) = -Gx(t) \tag{6.2.5}$$

where G is the gain $(m \times n)$ matrix to be selected. Then,

$$\dot{x}(t) = (A - BG)x(t) + hBG\dot{x}(\theta) \tag{6.2.6}$$

where

$$\dot{x}(\theta) = Ax(\theta) + Bu(\theta - h) = Ax(\theta) - BGx(\theta - h) \tag{6.2.7}$$

since $\quad u(\theta - h) = -Gx(\theta - h) \qquad (6.2.8)$

Hence, we have the following transformed state delayed multivariable system

$$\dot{x}(t) = \bar{A}x(t) + hBGAx(\theta) - h(BG)^2 x(\theta - h) \tag{6.2.9}$$

where $\bar{A} = A - BG$. G can be selected for example by pole placement, such that $\bar{A}$ has desirable eigenvalues.

As seen from (6.2.9), the state equation depends on:

1) current state $x(t)$, 2) near past history of the state $x(\theta)$, 3) far past history of the state $x(\theta - h)$.

Therefore, the problem of stabilization of system (6.2.9) is not simple.

Now, we need to make the following assumption.

Assumption 1: Time-delay parameter θ is a time-dependent function and norm-bounded such that

$$0 < 1 - \eta \le \dot{\theta}(t) \le \eta < 1 \tag{6.2.10}$$

where η is a scalar.

Note that Assumption 1 is conventional and is commonly used by many authors, for example, by Ikeda and Ashida [60], Su and Chu [61], Su, Ji and Chu [62], Wu, He, She and Liu [63], Kim [64] etc.

Stability results for transformed time-delay system (6.2.9) by using augmented Lyapunov–Krasovskii functionals can be formulated as follows.

Theorem 1: Suppose that Assumption 1 holds. Then the transformed time-delay system (6.2.9) driven by linear controller (6.2.5) is delay-dependent asymptotically stable, if there are design parameters G and positive definite symmetric matrices P, R and T such that the following conditions are satisfied:

$$H = \begin{bmatrix} -Q & hD & -hC & 0 \\ hD^T & \eta R - (1-\eta)S & 0 & 0 \\ -hC^T & 0 & -(1-\eta)R & 0 \\ 0 & 0 & 0 & -T \end{bmatrix} < 0 \tag{6.2.11}$$

$$P\bar{A} + \bar{A}^T P + S + T = -Q < 0 \tag{6.2.12}$$

$$0 < R < \frac{(1-\eta)}{\eta} S \ ; \tag{6.2.13}$$

where $D = PBGA$ and $C = P(BG)^2$.

Proof: Choose augmented Lyapunov–Krasovskii functionals candidate as follows:

$$V(x(t), x(\theta), x(\theta - h), x(t-h)) = x^T(t)Px(t) \tag{6.2.14}$$
$$+ \int_{\theta-h}^{\theta} x^T(\zeta)Rx(\zeta)d\zeta + \int_{\theta}^{t} x^T(\xi)Sx(\xi)d\xi + \int_{t-h}^{t} x^T(\varphi)Tx(\varphi)d\varphi$$

where P, R, S and T are some positive definite symmetric matrices.

The time derivative of (6.2.14) along the state trajectory of (6.2.9) can be calculated as follows:

$$\begin{aligned} \dot{V} &= x^T(t)P\dot{x}(t) + \dot{x}^T(t)Px(t) + \dot{\theta}(t)\left[x^T(\theta)Rx(\theta) - x^T(\theta - h)Rx(\theta - h)\right] \\ &+ x^T(t)Sx(t) - \dot{\theta}(t)x^T(\theta)Sx(\theta) + x^T(t)Tx(t) - x^T(t-h)Tx(t-h) \\ &= x^T(t)(P\bar{A} + \bar{A}^T P)x(t) + 2hx^T(t)PBGAx(\theta) - 2hx^T(t)P(BG)^2 x(\theta - h) \\ &+ \dot{\theta}(t)x^T(\theta)(R - S)x(\theta) - \dot{\theta}(t)x^T(\theta - h)Rx(\theta - h) + x^T(t)(S + T)x(t) - x^T(t-h)Tx(t-h) \end{aligned} \tag{6.2.15}$$

Published by WSEAS Press
www.wseas.org
ISBN: 978-960-474-050-5
ISSN: 1790-5117

Since $0 < 1-\eta \le \dot{\theta}(t) \le \eta < 1$

Then,

$$\dot{V} \le x^T(t)(P\bar{A} + \bar{A}^T P + S + T)x(t) + 2hx^T(t)PBGAx(\theta) - 2hx^T(t)P(BG)^2 x(\theta - h)$$
$$+ \eta x^T(\theta)Rx(\theta) - (1-\eta)x^T(\theta)Sx(\theta) - (1-\eta)x^T(\theta - h)Rx(\theta - h) - x^T(t-h)Tx(t-h)$$
$$= \begin{bmatrix} x(t) \\ x(\theta) \\ x(\theta - h) \\ x(t-h) \end{bmatrix}^T \begin{bmatrix} -Q & hD & -hC & 0 \\ hD^T & \eta R - (1-\eta)S & 0 & 0 \\ -hC^T & 0 & -(1-\eta)R & 0 \\ 0 & 0 & 0 & -T \end{bmatrix} \begin{bmatrix} x(t) \\ x(\theta) \\ x(\theta - h) \\ x(t-h) \end{bmatrix} = z^T(t)Hz(t) < -\lambda_{\min}(H)\|z(t)\|^2 < 0 \qquad (6.2.16)$$

where $z(t) = [x(t) \;\; x(\theta(\;\; x(\theta - h) \;\; x(t-h)]^T$, $D = PBGA$ and $C = P(BG)^2$, if conditions (6.2.11), (6.2.12) and (6.2.13) are satisfied.

Note that, matrix H has its own quadratic structure $H = MH_1M^T$, where

$$H_1 = \begin{bmatrix} -Q & 0 & 0 & 0 \\ 0 & \eta R - (1-\eta)S & 0 & 0 \\ 0 & 0 & -(1-\eta)R & 0 \\ 0 & 0 & 0 & -T \end{bmatrix}, \quad M = \begin{bmatrix} I & hD[\eta R - (1-\eta)S]^{-1} & hC[(1-\eta)R]^{-1} & 0 \\ 0 & I & 0 & 0 \\ 0 & 0 & I & 0 \\ 0 & 0 & 0 & I \end{bmatrix}$$

Since M is a nonsingular and $H_1 < 0$ because its leading principle elements are always negative then $H < 0$. Therefore, condition (6.2.11) is feasible. Thus, the transformed time-delay system (6.2.9) with known delay is delay-dependent asymptotically stable.

If we consider a case where the time-delay term is unknown but bounded $0 < h < \bar{h}$ then we can solve the following convex optimization problem:

OP: maximize h

Subject to conditions (6.2.11)-(6.2.13)

and $P, R, S, T > 0$ (6.2.17)

which is a quasi – convex optimization problem. Hence it is possible to compute the maximum upper bound $\bar{h}$ using efficient convex optimization algorithms by Boyd, Ghaoui, Feron, and Balakishnan [65], etc.

Theorem 1 is proven.

6.2.3 Robust stabilization of input-delayed systems with parameter uncertainties

The design approach advanced in section 2 can be extended to robust stabilization of input-delayed systems with parameter uncertainties. State equations of this class of systems can be presented as follows:

$$\dot{x}(t) = (A + \Delta A(\sigma))x(t) + Bu(t-h)$$
$$u(t) = \phi(t), \qquad -h \le t < 0 \qquad (6.2.18)$$

where in addition to (6.2.8) $\Delta A(\sigma)$ are the parameter uncertainties. It is assumed that $\max\|\Delta A(\sigma)\| \le \alpha$, σ is an uncertain element.

Substituting (6.2.3) with (6.2.5) into (6.2.18) we have:

$$\dot{x}(t) = \bar{A}x(t) + \Delta A(\sigma)x(t) + hBGAx(\theta) + hBG\Delta A(\sigma)x(\theta) - h(BG)^2 x(\theta - h) \qquad (6.2.19)$$

Now, delay–dependent robust stability conditions for transformed time-delayed system with parameter uncertainties can be formulated as follows.

Theorem 2: Suppose that Assumption 1 holds. Then, the transformed time–delay system with parameter uncertainties (6.2.19) driven by linear controller (6.2.5) is robustly asymptotically stable, if there are the design parameters G and positive definite symmetric matrices P, R, T and S such that the following conditions are satisfied:

Published by WSEAS Press
www.wseas.org
ISBN: 978-960-474-050-5
ISSN: 1790-5117

$$H=\begin{bmatrix} -Q & hD+\alpha\lambda_{\max}(PBG)I & -hC & 0 \\ hD^T+\alpha\lambda_{\max}(PBG)I & \eta R-(1-\eta)S & 0 & 0 \\ -hC^T & 0 & -(1-\eta)R & 0 \\ 0 & 0 & 0 & -T \end{bmatrix}<0 \tag{6.2.20}$$

$$P\overline{A}+\overline{A}^T P+S+T+\alpha\lambda_{\max}(P)I=-Q<0 \tag{6.2.21}$$

$$0<R<\frac{(1-\eta)}{\eta}S \tag{6.2.22}$$

where $D=PBGA$ and $C=P(BG)^2$.

Proof: Again consider an extended Lyapunov–Krasovskii functional of the form (6.2.14).
The time derivative of (6.2.14) along (6.2.19) is given by:

$$\begin{aligned}\dot{V}&=x^T(t)(P\overline{A}+\overline{A}^T P)x(t)+2x^T(t)P\Delta A(\sigma)x(t)+2hx^T(t)PBGAx(\theta)\\&+2hx^T(t)PBG\Delta A(\sigma)x(\theta)-2hx^T(t)P(BG)^2x(\theta-h)+\dot{\theta}(t)x^T(\theta)(R-S)x(\theta)\\&-\dot{\theta}(t)x^T(\theta-h)Rx(\theta-h)+x^T(t)(S+T)x(t)-x^T(t-h)Tx(t-h)\end{aligned} \tag{6.2.23}$$

Since

$$0<1-\eta\le\dot{\theta}(t)\le\eta<1 \tag{6.2.24}$$

$$x^T(t)P\Delta A(\sigma)x(t)\le\alpha\lambda_{\max}(P)x^T(t)x(t) \tag{6.2.25}$$

$$x^T(t)PBG\Delta A(\sigma)x(\theta)\le\alpha\lambda_{\max}(PBG)x^T(t)x(t) \tag{6.2.26}$$

Then (6.2.23) can be evaluated as follows:

$$=\begin{bmatrix} x(t) \\ x(\theta) \\ x(\theta-h) \\ x(t-h) \end{bmatrix}^T \begin{bmatrix} -Q & hD+\alpha\lambda_{\max}(PBG)I & -hC & 0 \\ hD^T+\alpha\lambda_{\max}(PBG)I & \eta R-(1-\eta)S & 0 & 0 \\ -hC^T & 0 & -(1-\eta)R & 0 \\ 0 & 0 & 0 & -T \end{bmatrix} \begin{bmatrix} x(t) \\ x(\theta) \\ x(\theta-h) \\ x(t-h) \end{bmatrix}=$$

$$z^T(t)Hz(t)<-\lambda_{\min}(H)\|z(t)\|^2<0 \tag{6.2.27}$$

where $z(t)=[x(t)\ \ x(\theta(\ \ x(\theta-h)\ \ x(t-h)]^T$, if the conditions (6.2.20), (6.2.21) and (6.2.22) are satisfied.
Note that, matrix H has its own quadratic structure $H=MH_1M^T$, where

$$H_1=\begin{bmatrix} -Q & 0 & 0 & 0 \\ 0 & \eta R-(1-\eta)S & 0 & 0 \\ 0 & 0 & -(1-\eta)R & 0 \\ 0 & 0 & 0 & -T \end{bmatrix},\ M=\begin{bmatrix} I & \overline{D}[\eta R-(1-\eta)S]^{-1} & hC[(1-\eta)R]^{-1} & 0 \\ 0 & I & 0 & 0 \\ 0 & 0 & I & 0 \\ 0 & 0 & 0 & I \end{bmatrix}$$

where $\overline{D}=hD+\alpha\lambda_{\max}(PBG)I$

Since M is a nonsingular matrix and $H_1<0$ because its leading principle elements are always negative then $H<0$. Therefore, condition (6.2.20) is feasible. Thus, the transformed time-delay system (6.2.19) with known delay is delay-dependent asymptotically stable.

If we consider a case where time-delay term is unknown but bounded $0<h<\overline{h}$ then we can solve the following convex optimization problem:

OP: maximize h
Subject to conditions (6.2.20)-(6.2.22)
and $P, R, S, T>0$ (6.2.28)

which is a quasi – convex optimization problem. Hence it is possible to compute the maximum upper bound $\overline{h}$ using efficient convex optimization algorithms by Boyd, Ghaoui, Feron, and Balakishnan [65], etc. Theorem 2 is proven.

6.2.4 Numerical example 1: rocket motor control

Let us consider a liquid monopropellant rocket motor with a pressure feeding system, which is more practical and complex example. This system is not delay-independently stabilizable either. Original complete dynamics model of rocket motor is given by Fiagbedzi and Pearson (1986) [66]. A

Published by WSEAS Press
www.wseas.org
ISBN: 978-960-474-050-5
ISSN: 1790-5117

linearized version of the feeding system and combustion chamber equations assuming non-steady flow is taken from [65] and Moon, Park, Kwon and Lee (2001), [66]:

$$\dot{x}(t) = Ax(t) + A_1 x(t-h) + Bu(t) \tag{6.2.29}$$

where $x(t) = [\phi(t) \;\; \mu_1(t) \;\; \mu(t) \;\; \psi(t)]^T$; $\phi(t)$ is the non-dimensional instantaneous pressure in the combustion chamber, $\mu_1(t)$ is the non-dimensional instantaneous mass flow upstream of the capacitance, $\mu(t)$ is the non-dimensional instantaneous mass rate of injected propellant and $\psi(t)$ is the non-dimensional instantaneous pressure at the place in the feeding line. h is the reduced time lag in steady operations, $h \le 1$.

$$u(t) = \frac{(p_0 - p_1)}{2\Delta p} \tag{6.2.30}$$

is the non-dimensional pressure control input.

$$A = \begin{bmatrix} 0 & 0 & 0 & 0 \\ 0 & 0 & 0 & -1 \\ -1 & 0 & -1 & 1 \\ 0 & 1 & -1 & 0 \end{bmatrix}; \quad A_1 = \begin{bmatrix} -1 & 0 & 1 & 0 \\ 0 & 0 & 0 & 0 \\ 0 & 0 & 0 & 0 \\ 0 & 0 & 0 & 0 \end{bmatrix}; \quad B = \begin{bmatrix} 0 & 0 & 0 & 0 \\ 0 & 1 & 0 & 0 \\ 0 & 0 & 0 & 0 \\ 0 & 0 & 0 & 0 \end{bmatrix}$$

(6.2.31)

System Equation (6.2.29) can be converted to our input-delayed system form as follows. Substituting $u(t) = -Gx(t)$ into (6.2.29) we have

$$\dot{x}(t) = (A - BG)x(t) + A_1 x(t-h)$$

(6.2.32)

Linear controller (6.2.5) computational algorithm for input delayed system (6.2.1) with stability conditions (6.2.11), (6.2.12), (6.2.13) can be fulfilled by the following MATLAB programming steps:

```
clear; clc;
A      = [0 0 0 0; 0 0 0 -1;
          -1 0 -1 1; 0 1 -1 0];
A1     = [-1 0 1 0; 0 0 0 0;
          0 0 0 0; 0 0 0 0];
B      = [0 0 0 0; 0 1 0 0;
          0 0 0 0; 0 0 0 0];
Lamda  = eig(A);
Poles  = [-0.4+1.27i; -0.4-1.27i;
          -0.21; -.1];
G      = place(A,A1,Poles);
aa     = 6.26;
h      = 0.244;
eta    = 0.005;
R      = 0.5*eye(4);
Q      = 0.9*eye(4);
S      = aa*(eta*R)/(1-eta);
Q1     = eye(4);
T      = Q1 - aa*S - Q;
eQ1    = aa*S + T + Q;
Ahat   = A - (B+A1)*G;
P      = lyap(eQ1,Ahat);
LamdaP = eig(P);
D      = P*A1*G*A;
C      = P*(A1*G*A1*G);
A1*G;
o0     = eye(4)-eye(4);
H      = [-Q h*D -h*C o0;
          h*D' eta*R-(1-eta)*S o0 o0;
          -h*C' o0 -(1-eta)*R o0;
          o0 o0 o0 -T];
Heig   = eig(H)
```

Computational results are

Published by WSEAS Press
www.wseas.org
ISBN: 978-960-474-050-5
ISSN: 1790-5117

- $eig(A)=\begin{bmatrix} -0.2151+1.3071i \\ -0.2151-1.3071i \\ -0.5698 \\ 0 \end{bmatrix}$, $Poles=\begin{bmatrix} -0.4000+1.2700i \\ -0.4000-1.2700i \\ -0.2100 \\ -0.1000 \end{bmatrix}$, $G=\begin{bmatrix} -0.0550 & -0.0023 & -0.0340 & 0.3268 \\ 0 & 0 & 0 & 0 \\ 0.0550 & 0.0023 & 0.0340 & -0.3268 \\ 0 & 0 & 0 & 0 \end{bmatrix}$
- $aa=6.26$
- $h_{\max}=0.2440$ sec.
- $\eta=0.0050$
- $R=\begin{bmatrix} 0.5000 & 0 & 0 & 0 \\ 0 & 0.5000 & 0 & 0 \\ 0 & 0 & 0.5000 & 0 \\ 0 & 0 & 0 & 0.5000 \end{bmatrix}$, $S=\begin{bmatrix} 0.0157 & 0 & 0 & 0 \\ 0 & 0.0157 & 0 & 0 \\ 0 & 0 & 0.0157 & 0 \\ 0 & 0 & 0 & 0.0157 \end{bmatrix}$, $Q=\begin{bmatrix} 0.9000 & 0 & 0 & 0 \\ 0 & 0.9000 & 0 & 0 \\ 0 & 0 & 0.9000 & 0 \\ 0 & 0 & 0 & 0.9000 \end{bmatrix}$
- $T=\begin{bmatrix} 0.0015 & 0 & 0 & 0 \\ 0 & 0.0015 & 0 & 0 \\ 0 & 0 & 0.0015 & 0 \\ 0 & 0 & 0 & 0.0015 \end{bmatrix}$, $Q_1=\begin{bmatrix} 1 & 0 & 0 & 0 \\ 0 & 1 & 0 & 0 \\ 0 & 0 & 1 & 0 \\ 0 & 0 & 0 & 1 \end{bmatrix}$, $P=\begin{bmatrix} 0.0550 & 0.0023 & 0.0340 & -0.3268 \\ 0 & 0 & 0 & 0.5000 \\ 0.5000 & 0 & 0.5000 & -0.5000 \\ 0 & -0.5000 & 0.5000 & 0 \end{bmatrix}$
- $eig(P)=\begin{bmatrix} 0.2000+0.6350i \\ 0.2000-0.6350i \\ 0.0500 \\ 0.1050 \end{bmatrix}$, $D=\begin{bmatrix} -0.0037 & -0.0359 & 0.0322 & 0.0035 \\ 0 & 0 & 0 & 0 \\ -0.0340 & -0.3268 & 0.2928 & 0.0317 \\ 0 & 0 & 0 & 0 \end{bmatrix}$,
- $C=\begin{bmatrix} 0.0007 & 0.0000 & 0.0004 & -0.0040 \\ 0 & 0 & 0 & 0 \\ 0.0061 & 0.0003 & 0.0037 & -0.0359 \\ 0 & 0 & 0 & 0 \end{bmatrix}$, $A_1*G=\begin{bmatrix} 0.1100 & 0.0047 & 0.0681 & -0.6536 \\ 0 & 0 & 0 & 0 \\ 0 & 0 & 0 & 0 \\ 0 & 0 & 0 & 0 \end{bmatrix}$
- $H=\begin{bmatrix}
-0.9000 & 0 & 0 & 0 & -0.0009 & -0.0088 & 0.0079 & 0.0009 & -0.0002 & -0.0000 & -0.0001 & 0.0010 & 0 & 0 & 0 \\
0 & -0.9000 & 0 & 0 & 0 & 0 & 0 & 0 & 0 & 0 & 0 & 0 & 0 & 0 & 0 \\
0 & 0 & -0.9000 & 0 & -0.0083 & -0.0797 & 0.0714 & 0.0077 & -0.0015 & -0.0001 & -0.0009 & 0.0088 & 0 & 0 & 0 \\
0 & 0 & 0 & -0.9000 & 0 & 0 & 0 & 0 & 0 & 0 & 0 & 0 & 0 & 0 & 0 \\
-0.0009 & 0 & -0.0083 & 0 & -0.0132 & 0 & 0 & 0 & 0 & 0 & 0 & 0 & 0 & 0 & 0 \\
-0.0088 & 0 & -0.0797 & 0 & 0 & -0.0132 & 0 & 0 & 0 & 0 & 0 & 0 & 0 & 0 & 0 \\
0.0079 & 0 & 0.0714 & 0 & 0 & 0 & -0.0132 & 0 & 0 & 0 & 0 & 0 & 0 & 0 & 0 \\
0.0009 & 0 & 0.0077 & 0 & 0 & 0 & 0 & -0.0132 & 0 & 0 & 0 & 0 & 0 & 0 & 0 \\
-0.0002 & 0 & -0.0015 & 0 & 0 & 0 & 0 & 0 & -0.4975 & 0 & 0 & 0 & 0 & 0 & 0 \\
-0.0000 & 0 & -0.0001 & 0 & 0 & 0 & 0 & 0 & 0 & -0.4975 & 0 & 0 & 0 & 0 & 0 \\
-0.0001 & 0 & -0.0009 & 0 & 0 & 0 & 0 & 0 & 0 & 0 & -0.4975 & 0 & 0 & 0 & 0 \\
0.0010 & 0 & 0.0088 & 0 & 0 & 0 & 0 & 0 & 0 & 0 & 0 & -0.4975 & 0 & 0 & 0 \\
0 & 0 & 0 & 0 & 0 & 0 & 0 & 0 & 0 & 0 & 0 & 0 & -0.0015 & 0 & 0 \\
0 & 0 & 0 & 0 & 0 & 0 & 0 & 0 & 0 & 0 & 0 & 0 & 0 & -0.0015 & 0 \\
0 & 0 & 0 & 0 & 0 & 0 & 0 & 0 & 0 & 0 & 0 & 0 & 0 & 0 & -0.0015 \\
0 & 0 & 0 & 0 & 0 & 0 & 0 & 0 & 0 & 0 & 0 & 0 & 0 & 0 & -0.0015
\end{bmatrix}$
- $eig(H)=[-0.9132\ -0.9\ -0.9\ -0.9\ -0.4975\ -0.4975\ -0.4975\ -0.4973\ -0.0132\ -0.0131\ -0.0131\ -0.0015\ -0.0015\ -0.0015\ -0.0015\ -0.000]$

6.2.5 Conclusions

In this paper, a new design approach based on Lagrange mean value theorem is used for the first time for the stabilization of multivariable input delayed system by linear controller. The delay–dependent asymptotical stability conditions are derived by using augmented Lyapunov-Krasovskii functionals and formulated in terms of conventional Lyapunov matrix equations and some simple matrix inequalities. Proposed design approach is extended to robust stabilization of multi-variable input delayed systems with unmatched parameter uncertainties. The maximum upper bound of delay size is computed by using simple optimization algorithm. A liquid monopropellant rocket motor with a

Published by WSEAS Press
www.wseas.org
ISBN: 978-960-474-050-5
ISSN: 1790-5117

pressure feeding system is considered as a numerical design example. Design example shows the effectiveness of our proposed design approach.

6.3 Delay-dependent stabilization of single input-delayed systems by continuous sliding mode control: a new design methodology

The Smith predictor method, reduction method and reduction method combined with classical discontinuous sliding mode control approaches are discussed and presented as some preliminary results. A new continuous sliding mode control design methodology based on Lagrange mean value theorem is proposed for stabilization of single input delayed systems. The Lagrange mean value theorem as a basic theorem of calculus is used for the design of linear sliding mode time-delay controller for the first time. This controller satisfies the sliding condition using a Zhou and Fisher type continuous control law eliminating the chattering effect. The constructive delay-dependent asymptotically stable sliding conditions are obtained by using the augmented Lyapunov-Krasovskii functionals and formulated in terms of simple (4×4)-matrix inequality with scalar elements. Developed design approach can be extended to robust stabilization of sliding system with unknown but bounded input delay. These contributions are the main results of the paper. Four analytical and numerical design examples are considered to illustrate the various design approaches. The maximum upper bounds of delay size can be found by using simple optimization algorithms. Helicopter hover control is considered as fifth design example for illustrating the performances of smooth sliding mode approach and Smith predictor control. Unstable helicopter dynamics are successfully stabilized by using linear sliding mode time-delay controller. For example, settling time is about 20 sec. Smith predictor control result, also, is very well, because for considered example model parameters are known. Therefore, simulation results confirmed the effectiveness of proposed design methodology. Apparently, the proposed method has a great potential in design of time-delayed controllers.

6.3.1 Introduction

Time-delay effect is frequently encountered in oil-chemical systems, metallurgy and machine-tool process control, nuclear reactors, bio-technical systems missile-guidance and aircraft control systems, aerospace remote control and communication control systems, etc. The presence of delay effect complicates the analysis and design of control systems. Moreover, time delay effects in state vector, especially in control input degrades the control performances and make the closed–loop stabilization problem challenging. A common design method of input-delayed systems is well known Smith predictor control to cancel the effect of time-delay. Smith predictor is a popular and very effective long delay compensator for stable processes. The main advantage of the Smith predictor control method is that, the time-delay is eliminated from the characteristic equation of the closed-loop system. Classical Smith predictor was suggested by Smith [68], [69]. Modified Smith predictor scheme's have been advanced by Marshall [70], Aleviskas and Seborg [71], Watanabe and Ito [72], [73], Al-Sunni and Al-Neymer [74], Majhi and Atherton [75].

The other important control design method of input-delayed systems is the reduction method that was suggested by Kwon and Pearson [76].

Recently several new variable structure control design methods for stabilization of various classes of systems without time-delay are developed, for example by Wang, Lee and Juang [77], Lee and Xu [78], Cao and Xu [79], [80], Choi [81], Edwards, Spurgeon and Hebden [82], Sabanovic, Fridman and Spurgeon [83], Jafarov [84]-[86], Yeh, Chien and Fu [87], Singh, Steinberg and Page [88], Koshkouei and Zinober [89]. But, there is no a large number of papers concerning the problem of stabilization of time-delay systems by variable structure control, for example see Shyu and Yan [90], Yan [91], Luo, De La Sen and Rodellar [92], Gouaisbaut, Dambrine and Richard [93], Richard [94], Perruquetti and Barbot [95], Jafarov [96], [97], Li and De Carlo [98], Gouaisbaut, Blango and Richard [99], Koshkouei and Zinober [100] etc. In analysis and design of time-delay systems by sliding mode control the Lyapunov-Krasovskii functional method is commonly used. Recent advances in time-delay systems are presented by Richard [94], Fridman and Shaked [101], Jafarov [102], Niculescu and Gu [103], Niculescu [104], Mahmoud [105], Gu, Kharitonov and Chen [106], Boukas and Liu [107]. Some sufficient delay-dependent stability conditions for linear delay perturbed systems are derived using exact Lyapunov-Krasovskii functionals by Kharitonov and Niculescu [108]. Several new LMI delay-dependent robust stability results for linear time-delay systems with unknown time-invariant delays by using Padé approximation are presented by Zhang, Knospe and Tsiotras [109]. Both delay-independent and delay-dependent robust stability LMI's from conditions

Published by WSEAS Press
www.wseas.org
ISBN: 978-960-474-050-5
ISSN: 1790-5117

for linear time-delay systems with unknown delays by using appropriately selected Lyapunov-Krasovskii functionals are systematically investigated by Zhang, Knospe and Tsiotras in another paper [110]. Stability of the internet network rate control with diverse delays based on Nyquist criterion is considered by Tian and Yang [111]. Improved delay-dependent stability conditions for time-delay systems in terms of strict LMI's avoiding cross terms are developed by Xu and Lam [112]. A new state transformation is introduced to exhibit the delay-dependent stability condition for time-delay systems by Mahmoud and Ismail [113].

Variable structure control is often used to handle the worst-case control environment: parametric perturbations, external disturbances with knowledge of only the upper bounds etc. Sometimes we may come up with more appropriate control approaches such as incorporating VSC with linear control, time-delay control etc. It is well known that classical sliding mode control uses a discontinuous control action to drive the state to the origin along the reaching and sliding paths and is insensitive to parametric uncertainties and external disturbances. However, the control chattering due to the discontinuity in control law sometimes is undesirable. The continuous sliding mode control approach satisfies the sliding conditions using a continuous control law without requiring discontinuous switching in the controller. Therefore, it retains the advantages of sliding control but without the chattering phenomena. Such approach is used by Zhou and Fisher [114], Shtessel and Buffingtonn [115] etc. Continuous sliding mode control concept is discussed in details and its comparison analysis with the conventional discontinuous sliding mode control by Zhou and Fisher [114].

Note that VSC cannot be directly applied to the control of input-delayed system. Feng, Mian and Weibing [116], Hu, Basker and Crisalle [117] have been successfully used the reduction method combined with variable structure control for stabilization of certain and uncertain multivariable input-delayed systems with known delays.

In this topic, the Smith predictor method, reduction method and reduction method combined with classical discontinuous sliding mode control approaches are discussed and presented as some preliminary results. A new sliding mode control design methodology for the single input delayed systems with known or unknown but bounded delays is developed. This design method is based on the Lagrange mean value theorem, which is used for the first time for the stabilization of input-delayed systems. Proposed linear sliding mode time-delay controller also satisfies the sliding condition, but in contrast to classical variable structure control, uses Zhou and Fisher type of continuous control law without requiring discontinuous switching in the controller. Therefore, undesired control chattering in this case is avoided.

The constructive delay-dependent asymptotical stability and robustly stable sliding conditions are obtained by using the Lyapunov-Krasovskii functional method and formulated in terms of some matrix inequalities. Hence, it is possible also to compute the maximum upper bound of the allowable time-delay $\bar{h}$ using efficient convex optimization algorithms. Four analytical and numerical design examples are considered for illustrating the various design approaches. The maximum upper bound of delay size is computed by using simple optimization algorithm. Helicopter hover control is considered as fifth design example for illustrating the performances of smooth sliding mode approach and Smith predictor control. Unstable helicopter dynamics is successfully stabilized by using linear sliding mode time-delay controller. For example, settling time is about 20 sec. Smith predictor control result, also, is very well, because for considered example model parameters are known. Therefore, simulation results confirmed the effectiveness of the proposed design methodology.

6.3.1 Preliminary results and problem statement

For the better understanding the Smith predictor control, reduction method and reduction method combined with variable structure control design approaches let us consider the following single input-delayed system

$$\dot{x}(t) = Ax(t) + bu(t-h) \tag{6.3.1}$$

where $x(t)$ is the measurable n-state vector, u(t) is the scalar control input, A is a constant real ($n \times n$) matrix, b is the constant n-vector, $h > 0$ is a time-delay.

Smith predictor method: Modified Smith predictor control scheme represented in state-space equation form is shown in Figure 1 where $r(t)$ is the reference vector, $\Delta x(t)$ is the state error vector. From Figure 1, the state-space equation of controlled system can be presented as follows:

Published by WSEAS Press
www.wseas.org
ISBN: 978-960-474-050-5
ISSN: 1790-5117

$$\dot{x}(t) = Ax(t) + bu(t) + bk^T r(t-h) \tag{6.3.2}$$

where it is assumed that the model parameters A_m, b_m, h_m exactly coincide with the process parameters A, b and h. Therefore, the time-delay is moved outside the minor loop, which means that the design problem can be considered for delay free system.

Thus, for example a linear controller:

$$u(t) = -k^T x(t) \tag{6.3.3}$$

where k is the gain n-vector parameter, can be designed by using one of the known design methods, for example by pole placement method. Then, the closed-loop delay-free system with desirable poles is given by

$$\dot{x}(t) = (A - bk^T)x(t) \tag{6.3.4}$$

Note that the time response of closed-loop system (6.3.2) depends on delayed input reference function r(t-h). Therefore, Smith predictor moved the time-delay from minor loop to major loop. Moreover, the Smith predictor needs to exact model of the process and it is sensitive to parameter variations. Details of advantages and disadvantages of Smith predictor design methods are discussed in above-mentioned references [70]-[75].

Reduction method: In according to this method, if an unknown delay term is constant but bounded $0 < h < \bar{h}$, then delay-dependent stability conditions can be derived by using the following linear state transformation [76]:

$$z(t) = x(t) + \int_{t-h}^{t} e^{A(t-h-\theta)} b_1 u(\theta) d\theta \tag{6.3.5}$$

for input-delayed system:

$$\dot{x}(t) = Ax(t) + b_0 u(t) + b_1 u(t-h) \tag{6.3.6}$$

where b_0 and b_1 are the constant vectors.

Then, (6.3.6) can be reduced to following delay-free system:

$$\dot{z}(t) = Az(t) + (b_0 + e^{-Ah} b_1)u(t) = Az(t) + \bar{b}u(t) \tag{6.3.7}$$

where $\bar{b} = b_0 + e^{-Ah} b_1$.

This system can be stabilized by using delayed controller:

$$u(t) = -k^T z(t) \tag{6.3.8}$$

Choose a Lyapunov function candidate as:

$$V(z(t)) = z^T(t) P z(t) \tag{6.3.9}$$

where P is a positive definite symmetric matrix to be selected.

Then the time-derivative (6.3.9) for (6.3.7), (6.3.8) can be found as:

$$\dot{V} = z^T(t)[P(A - \bar{b}k^T) + (A - \bar{b}k^T)^T P]z(t) = -z^T(t) Q z(t) < 0 \tag{6.3.10}$$

if the following Lyapunov matrix equation holds:

$$P(A - \bar{b}k^T) + (A - \bar{b}k^T)^T P = -Q < 0 \tag{6.3.11}$$

where Q is a positive definite symmetric matrix.

Thus, controller (6.3.8) stabilizes (6.3.7) if the condition (6.3.11) holds. If we consider a case where delay term is uncertain but bounded $0 < h < \bar{h}$ then we can solve the following convex optimization problem:

OP: maximize h
Subject to LMI (6.3.11) (6.3.12)
and P>0

which is a quasi-convex optimization problem. Hence it is possible to compute the maximum upper bound $\bar{h}$ using efficient convex optimization algorithms by Boid, Ghaoui, Feron and Balakrishnan [118].

In order to compute the maximum upper bound $\bar{h}$ let us consider the following simple example.

Example 1: Consider the first order input-delayed system

Published by WSEAS Press
www.wseas.org
ISBN: 978-960-474-050-5
ISSN: 1790-5117

$$\dot{x}(t) + ax(t) = bu(t-h) \tag{6.3.13}$$

where a and b are some constant scalars.
By using a linear state transformation:

$$z(t) = x(t) + \int_{t-h}^{t} e^{-a(t-h-\theta)} bu(\theta) d\theta \tag{6.3.14}$$

input-delayed system (6.3.13) reduces to:

$$\dot{z}(t) = -az(t) + e^{ah} bu(t) \tag{6.3.15}$$

which can be stabilized by linear delayed controller

$$u(t) = kz(t) \tag{6.3.16}$$

Choosing a Lyapunov function as

$$V = \frac{1}{2} z^2(t) \tag{6.3.17}$$

the time-derivative of (6.3.17) for (6.3.15) can be found as

$$\dot{V} = -(a - e^{ah} bk) z^2(t) \tag{6.3.18}$$

Hence, the stability condition for (6.3.15) and (6.3.16) with known delay h>0 is trivial:

$$a - e^{ah} bk > 0 \tag{6.3.19}$$

If we consider a case where h is unknown but bounded $0 < h < \bar{h}$ then the upper bound can be obtained from (6.3.19) as follows

$$\bar{h} = \frac{\ln \frac{a}{bk}}{a} \tag{6.3.20}$$

Thus, transformed system (6.3.15) is robustly stable for any $0 < h < \bar{h}$ with maximum upper bound $\bar{h}$ (6.3.20).

Reduction method combined with discontinuous VSC: Now, let us demonstrate how this idea can be used for the control of single input-delayed system of form (6.3.6) with matched external disturbances:

$$\dot{x}(t) = Ax(t) + b_0 u(t) + b_1 u(t-h) + f(t) \tag{6.3.21}$$

where $f(t)$ is an unknown but norm-bounded and matched external disturbance:

$$f(t) = \bar{b}\bar{f}(t); \qquad \left|\bar{f}(t)\right| \le f_0 \tag{6.3.22}$$

$\bar{f}(t)$ is a scalar function, f_0 is a given scalar.
By using reduction method input-delayed system (6.3.21) can be transformed to the delay free system (6.3.23).

$$\dot{z}(t) = Az(t) + \bar{b}u(t) + \bar{b}\bar{f}(t) \tag{6.3.23}$$

Then, we can utilize the following simple classical discontinuous sliding mode control

$$u(t) = -k^T z(t) - \delta sign(s(t)) \tag{6.3.24}$$

$$s(t) = c^T z(t) \tag{6.3.25}$$

where $s(t)$ is the switching function, c is a design n-vector, k is a relay gain vector, δ is a scalar to be determined. The sufficient conditions for the existence of the sliding mode are formulated in the following theorem.

Theorem 1: Suppose that the matching condition (6.3.22) holds. Then an asymptotically stable sliding mode can always be generated on the sliding manifold $s(t) = 0$ (6.3.25) defined for the transformed system (6.3.23) driven by variable structure controller (6.3.24) if the following conditions are satisfied:

$$c^T \left(A - \bar{b}k^T\right) = \lambda_L c^T \tag{6.3.26}$$

$$c^T \bar{b}(\delta - f_0) > 0 \tag{6.3.27}$$

where λ_L is one of the left eigenvalues of the stable closed loop system matrix $\left(A - \bar{b}k^T\right)$.

Proof: The time derivative of the Lyapunov function candidate

Published by WSEAS Press
www.wseas.org
ISBN: 978-960-474-050-5
ISSN: 1790-5117

$$V(s(t)) = \frac{1}{2}s^2(t) \tag{6.3.28}$$

along the trajectory of the system (6.3.23) can be calculated as follows:

$$\dot{V} = s(t)\dot{s}(t) = s(t)c^T\dot{z}(t) = s(t)[c^T Az(t) - c^T\bar{b}k^T z(t) - c^T\bar{b}\delta sign(s(t)) + c^T\overline{bf}(t)]$$
$$= s(t)c^T\left(A - \bar{b}k^T\right)z(t) - c^T\bar{b}\delta|s(t)| + c^T\overline{bf}(t)s(t) \tag{6.3.29}$$

Now we can present the switching vector c^T corresponding to one of the left eigenvector of the closed loop system matrix $\left(A - \bar{b}k^T\right)$ as stated in (6.3.26).

Note that, design of the plane $s(t) = c^T z(t) = 0$ does not imply assigning the eigenvalue λ_L; it appears in proof of the theorem only and may take an arbitrary value as pointed by Ackermann and Utkin [119]. Then (6.3.29) reduces to:

$$\dot{V}(t) \le \lambda_L s^2(t) - c^T\bar{b}(\delta - f_o)|s(t)| \tag{6.3.30}$$

or

$$s(t)\dot{s}(t) < -\mu_1|s(t)| < 0 \tag{6.3.31}$$

since $\lambda_L s^2(t) < 0$; where $\mu_1 = c^T\bar{b}(\delta - f_o)$ is a positive constant. Then, reaching time can be evaluated approximately as:

$$t_s \le \frac{|s(0)|}{\mu_1} \tag{6.3.32}$$

Therefore, the sliding surface is reached in finite time. In other words, the controller exists and makes the manifold $s(t) = 0$ asymptotically stable and globally attractive in finite time. This ends the proof.

If we consider a case where time-delay is uncertain but bounded $0 < h < \bar{h}$ then we can solve the following convex optimization problem:

OP: maximize h

Subject to conditions (6.3.26), (6.3.27) (6.3.33)

In order to compute the maximum upper bound $\bar{h}$ let us consider the following simple example.

Example 2: Again consider simple input-delayed system (6.3.13) transformed to (6.3.15). Define the classical relay controller and switching function as:

$$u(t) = ksign(s(t)) \tag{6.3.34}$$

$$s(t) = cz(t) \tag{6.3.35}$$

where k and c are design constants.

Closed-loop system can be written as

$$\dot{z}(t) = -az(t) + e^{ah}bksign(s(t)) \tag{6.3.36}$$

Sliding condition for (6.3.36) is given by

$$s(t)\dot{s}(t) = -as^2(t) + e^{ah}cbk|s(t)| < (e^{ah}cbk - a)s^2(t) < 0 \tag{6.3.37}$$

if $e^{ah}cbk - a < 0$. (6.3.38)

Hence the maximum upper bound $\bar{h}$ can be obtained as:

$$\bar{h} = \frac{\ln\frac{a}{cbk}}{a} \tag{6.3.39}$$

and, (6.3.36) is robustly stable for any $0 < h < \bar{h}$ with the upper bound (6.3.39).

Thus, summarizing above mentioned design approaches we can conclude that these methods are very useful for many cases, but they cannot be directly used to treat the input-delayed systems. Therefore, a question arises whether it is possible to consider direct design of input-delayed system.

In this section, a new sliding mode control design methodology for the single input-delayed systems with known or unknown but bounded delays is proposed. This design method is based on the Lagrange mean value theorem.

Remember that Lagrange mean value theorem [120], [121] is stated as follows

Published by WSEAS Press
www.wseas.org
ISBN: 978-960-474-050-5
ISSN: 1790-5117

$$\frac{f(b)-f(a)}{b-a} = f'(\xi), \quad a < \xi < b \tag{6.3.40}$$

where $f(x)$ is a continuous at every point of the closed interval [a, b] and differentiable at every point of its interior (a, b) or in terms of delayed control input

$$u(t-h) = u(t) - h\dot{u}(\theta) \tag{6.3.41}$$

where θ is a point in $t-h<\theta<t$.

After introducing the θ parameter, the constructive delay-dependent asymptotical stability and robustly stable sliding conditions can be derived by using the augmented Lyapunov-Krasovskii functionals method. Hence, it is possible to compute the maximum upper bound of the allowable time-delay $\bar{h}$ using efficient convex optimization algorithms. Analytical and numerical design examples are considered to illustrate our design approach. The maximum upper bound of delay size is computed by using simple optimization algorithm. Note that such direct combined design methodology is introduced to the control theory for the first time.

6.3.3 Main results: a new design methodology

Now, after preparing the necessary background we can present a new continuous sliding mode control design methodology for input-delayed systems with known or unknown but bounded delays.

Again consider single-input delayed system (6.3.1) with known $h = const > 0$ or unknown but bounded delay $0 < h < \bar{h}$ and initial condition $u(t) = \phi(t)$ for $-h \le t \le 0$, where $\phi(t)$ is a known scalar function.

Select a Zhou and Fisher type of continuous sliding mode controller as

$$u(t) = -ks(t) \tag{6.3.42}$$

where k is a constant gain scalar to be designed. Assume that linear sliding mode is defined in n-dimensional state space by the following linear function:

$$s(t) = c^T x(t) \tag{6.3.43}$$

where c is a design n-vector to be selected. This linear control law must satisfy the sliding condition.

Using the Lagrange mean value theorem (6.3.41) let us represent input-delayed system (6.3.1) as follows

$$\begin{aligned}\dot{x}(t) &= Ax(t) + b[u(t) - h\dot{u}(\theta)] = Ax(t) - bks(t) - bh\dot{u}(\theta) = Ax(t) - bks(t) + kbh\dot{s}(\theta) \\ &= Ax(t) - bks(t) + kbhc^T\dot{x}(\theta) = Ax(t) - bks(t) + kbhc^T[Ax(\theta) - bks(\theta - h)] \\ &= Ax(t) - bks(t) + kbhc^T Ax(\theta) - k^2 hbc^T bs(\theta - h)]\end{aligned} \tag{6.3.44}$$

From (44) it is obvious that full delay term h already appears in transformed system. Now, our goal is to organize an asymptotically stable linear sliding mode on defined hyper plane $s(t) = 0$ (6.3.43). Stable sliding mode conditions are formulated in the following theorem. But, we need to make the following assumption.

Assumption 1: Time-delay parameter θ is a time-dependent function and norm-bounded such that

$$0 < 1 - \eta \le \dot{\theta}(t) \le \eta < 1 \tag{6.3.45}$$

where η is a scalar.

Note that time-delay Assumption 1 is conventional and is commonly used by many authors, for example, by Ikeda and Ashida [122], Su and Chu [123], Su, Ji and Chu [124], Wu, He, She and Liu [125], Kim [126] etc.

Theorem 2: Suppose that Assumption 1 holds. Then the transformed time-delay system (6.3.44) driven by continuous sliding mode controller (6.3.42), (6.3.43), is delay-dependent asymptotically stable relative to the manifold $s(t) = 0$ (6.3.43), if there are design parameters $k, \mathrm{c}, \alpha, \beta, \gamma$ and η such that the following sliding conditions are satisfied:

Published by WSEAS Press
www.wseas.org
ISBN: 978-960-474-050-5
ISSN: 1790-5117

$$H=\begin{bmatrix} \lambda-kc^T\mathrm{b}+\beta+\gamma & \frac{1}{2}khc^Tb\lambda & -\frac{1}{2}k^2h(c^Tb)^2 & 0 \\ \frac{1}{2}khc^Tb\lambda & \alpha\eta-(1-\eta)\beta & 0 & 0 \\ -\frac{1}{2}k^2h(c^Tb)^2 & 0 & -\alpha(1-\eta) & 0 \\ 0 & 0 & 0 & -\gamma \end{bmatrix}<0 \tag{6.3.46}$$

or

$$k>\frac{\lambda+\beta+\gamma}{c^Tb} \tag{6.3.47}$$

$$\alpha<\frac{1-\eta}{\eta}\beta \tag{6.3.48}$$

$$c^TA=\lambda c^T \tag{6.3.49}$$

where λ is any left or right eigenvalue of matrix A; α, β and γ are some positive adjustable scalars.

Proof: Choose an augmented Lyapunov-Krasovskii functionals as

$$V(s(t),s(\theta),s(\theta-h),s(t-h))=\frac{1}{2}s^2(t)+\alpha\int_{\theta-h}^{\theta}s^2(\zeta)d\zeta+\beta\int_{\theta}^{t}s^2(\xi)d\xi+\gamma\int_{t-h}^{t}s^2(\varphi)d\varphi \tag{6.3.50}$$

where α, β and γ are some positive adjustable scalars.

The time derivative of (6.3.50) along the state trajectory of (6.3.44) can be calculated as follows:

$$\begin{aligned}\dot{V}&=s(t)\dot{s}(t)+\dot{\theta}(t)\alpha(s^2(\theta)-s^2(\theta-h))+\beta s^2(t)-\dot{\theta}(t)\beta s^2(\theta)+\gamma s^2(t)-\gamma s^2(t-h)\\ &=s(t)[c^TAx(t)-kc^Tbs(t)+khc^Tbc^TAx(\theta)-k^2h(c^Tb)^2s(\theta-h)]+(\beta+\gamma)s^2(t)-\gamma s^2(t-h)\\ &\quad+\alpha\dot{\theta}(t)s^2(\theta)-\alpha(\theta)\dot{\theta}(t)s^2(\theta-h)-\beta\dot{\theta}(t)s^2(\theta)\end{aligned} \tag{6.3.51}$$

Since

$$\dot{\theta}(t)s^2(\theta)\le\eta s^2(\theta) \tag{6.3.52}$$

$$-\dot{\theta}(t)s^2(\theta-h)\le-(1-\eta)s^2(\theta-h) \tag{6.3.53}$$

and (6.3.49) hold, then (6.3.51) reduces to

$$\begin{aligned}\dot{V}&\le\lambda s^2(t)-kc^Tbs^2(t)+khc^Tb\lambda s(\theta)s(t)-k^2h(c^Tb)^2s(\theta-h)s(t)+(\beta+\gamma)s^2(t)\\ &-\gamma s^2(\theta-h)+\eta\alpha s^2(\theta)-(1-\eta)\alpha s^2(\theta-h)-(1-\eta)\beta s^2(\theta)-\gamma s^2(t-h)\\ &=(\lambda-kc^Tb+\beta+\gamma)s^2(t)+khc^Tb\lambda s(\theta)s(t)-k^2h(c^Tb)^2s(t)s(\theta-h)+(\eta\alpha-(1-\eta)\beta)s^2(\theta)\\ &-(1-\eta)\alpha s^2(\theta-h)-\gamma s^2(t-h)\\ &=\begin{bmatrix}s(t)\\ s(\theta)\\ s(\theta-h)\\ s(t-h)\end{bmatrix}^T\begin{bmatrix}\lambda-kc^T\mathrm{b}+\beta+\gamma & \frac{1}{2}khc^Tb\lambda & -\frac{1}{2}k^2h(c^Tb)^2 & 0\\ \frac{1}{2}khc^Tb\lambda & \alpha\eta-(1-\eta)\beta & 0 & 0\\ -\frac{1}{2}k^2h(c^Tb)^2 & 0 & -\alpha(1-\eta) & 0\\ 0 & 0 & 0 & -\gamma\end{bmatrix}\begin{bmatrix}s(t)\\ s(\theta)\\ s(\theta-h)\\ s(t-h)\end{bmatrix}\\ &=y^T(t)Hy(t)<-\lambda_{\min}(H)\|y(t)\|^2<0\end{aligned} \tag{6.3.54}$$

where $y(t)=[\ s(t)\quad s(\theta)\quad s(\theta-h)\quad s(t-h)]^T$

Note that matrix H has its own quadratic structure $H=MH_1M^T$

where

Published by WSEAS Press
www.wseas.org
ISBN: 978-960-474-050-5
ISSN: 1790-5117

$$H_1 = \begin{bmatrix} \lambda+\beta+\gamma-kc^Tb & 0 & 0 & 0 \\ 0 & \alpha\eta-(1-\eta)\beta & 0 & 0 \\ 0 & 0 & -\alpha(1-\eta) & 0 \\ 0 & 0 & 0 & -\gamma \end{bmatrix}, \quad M = \begin{bmatrix} 1 & \dfrac{0.5kh\lambda c^Tb}{\alpha\eta-(1-\eta)\beta} & \dfrac{0.5k^2h(c^Tb)^2}{\alpha(1-\eta)} & 0 \\ 0 & 1 & 0 & 0 \\ 0 & 0 & 1 & 0 \\ 0 & 0 & 0 & 1 \end{bmatrix}$$

Since M is a nonsingular and $H_1 < 0$ because its leading principle elements are always negative then $H < 0$. Therefore, condition (6.3.54) means that manifold $s(t) = 0$ is reached in finite time and the reaching time can be evaluated approximately as follows:

$$t_s \le \frac{\|y(0)\|}{\lambda_{\min}(H)} \tag{6.3.55}$$

Thus, the time-delay system (44) with known delay is delay-dependent asymptotically stable.

If we consider a case where the delay term is unknown but bounded $0 < h < \bar{h}$ then we can solve the following convex optimization problem:

OP: maximize h

Subject to conditions (6.3.46) (6.3.56)

This ends the proof of Theorem 2.

Let us consider a simple analytical example to illustrate our design approach

Example 3: Again consider the simple input-delayed system (6.3.13). Define a continuous sliding mode controller as follows.

$$u(t) = -ks(t) \tag{6.3.57}$$

$$s(t) = cx(t) \tag{6.3.58}$$

where k and c are the design scalars.

Substituting (41) with (57) and (58) into (13) we have

$$\begin{aligned} \dot{x}(t) &= -ax(t) + bu(t-h) = -ax(t) + bu(t) - bh\dot{u}(\theta) = -ax(t) - bks(t) + bhk\dot{s}(\theta) \\ &= -ax(t) - bks(t) + bhkc\dot{x}(\theta) = -ax(t) - bks(t) - abhkcx(\theta) - b^2hk^2cs(\theta-h) \\ &= -ax(t) - bks(t) - abhks(\theta) - b^2hk^2cs(\theta-h) \end{aligned} \tag{6.3.59}$$

Then the time-derivative of (6.3.50) along (6.3.59) is given by

$$\begin{aligned} \dot{V} &= s(t)\dot{s}(t) + \dot{\theta}(t)\alpha\left[s^2(\theta) - s^2(\theta-h)\right] + \beta s^2(t) - \dot{\theta}(t)\beta s^2(\theta) + \gamma s^2(t) - \gamma s^2(t-h) \\ &= s(t)[-acx(t) - bkcs(t) - abchks(\theta) - b^2c^2hk^2s(\theta-h)] + \dot{\theta}(t)\alpha s^2(\theta) \\ &- \dot{\theta}(t)\alpha s^2(\theta-h) + \beta s^2(t) - \dot{\theta}(t)\beta s^2(\theta) + \gamma s^2(t) - \gamma s^2(t-h) \\ &\le \left(-a - bck + \beta + \gamma\right)s^2(t) - abchks(t)s(\theta) - b^2c^2hk^2s(t)s(\theta-h) \\ &+ \left(\alpha\eta + \beta(1-\eta)\right)s^2(\theta) - \alpha(1-\eta)s^2(\theta-h) - \gamma s^2(t-h) \end{aligned} \tag{6.3.60}$$

$$= \begin{bmatrix} s(t) \\ s(\theta) \\ s(\theta-h) \\ s(t-h) \end{bmatrix}^T \begin{bmatrix} -bck-a+\beta+\gamma & -\frac{1}{2}abchk & -\frac{1}{2}b^2c^2hk^2 & 0 \\ -\frac{1}{2}abchk & \alpha\eta-(1-\eta)\beta & 0 & 0 \\ -\frac{1}{2}b^2c^2hk^2 & 0 & -\alpha(1-\eta) & 0 \\ 0 & 0 & 0 & -\gamma \end{bmatrix} \begin{bmatrix} s(t) \\ s(\theta) \\ s(\theta-h) \\ s(t-h) \end{bmatrix}$$

$$= y^T(t)\overline{H}y(t) < -\lambda_{\min}(\overline{H})\|y(t)\|^2 < 0$$

or the following Sylvester's conditions hold:

$$|\overline{H}_1| = -bck - a + \beta + \gamma < 0 \text{ or } bck > -a + \beta + \gamma \quad \text{with } \beta + \gamma > 0 \tag{6.3.61}$$

$$|\overline{H}_2| = \left[-bck - a + \beta + \gamma\right]\left[\alpha\eta + \beta(1-\eta)\right] - \frac{1}{4}(abchk)^2 < 0 \tag{6.3.62}$$

$|\overline{H}_3| < 0$ and $|\overline{H}_4| < 0$ respectively,

then , time-delay system (6.3.59) with known h is delay-dependent asymptotically stable relative to the $s(t) = 0$.

Published by WSEAS Press
www.wseas.org
ISBN: 978-960-474-050-5
ISSN: 1790-5117

If we consider a case where h is unknown but bounded $0 < h < \overline{h}$ then the maximum upper bound can be calculated as follows.

From min $|H_2| < 0$ (6.3.62) we compute

$$\frac{\partial\left|\overline{H}_2\right|}{\partial k} = -abc\left[\alpha\eta + \beta(1-\eta)\right] - \frac{1}{2}(abch)^2 k = 0 \tag{6.3.63}$$

Hence, $\overline{h} = \sqrt{\dfrac{-2bc\left[\alpha\eta + \beta(1-\eta)\right]}{k(abc)^2}}$ (6.3.64)

with $\alpha\eta + \beta(1-\eta) < 0$, $bc > 0$.

Thus, time-delay system (6.3.59) with unknown but bounded delay term is robustly asymptotically stable relative to the $s(t) = 0$ with upper bound $\overline{h}$ (6.3.64).

Design Example 4: Helicopter hover control

The linearized longitudinal motion of helicopter near hover (Fig.2) can be modeled by the normalized linear third order system [127] with pilot time-delay h [128] as follows:

$$\begin{bmatrix} \dot{q} \\ \dot{\theta} \\ \dot{u} \end{bmatrix} = \begin{bmatrix} -0.4 & 0 & -0.01 \\ 1 & 0 & 0 \\ -1.4 & 9.8 & -0.02 \end{bmatrix} \begin{bmatrix} q \\ \theta \\ u \end{bmatrix} + \begin{bmatrix} 6.3 \\ 0 \\ 9.8 \end{bmatrix} \delta(t-h) \tag{6.3.65}$$

where

q is the pitch rate,

θ is the pitch angle of fuselage,

u is the horizontal velocity (standard aircraft notation),

δ is the rotor tilt angle (control variable),

h is the pilot's effective time- delay, for example, $h = 0.43$ s.

Continuous sliding mode controller is formed as (6.3.42):

$$u(t) = -ks(t) \tag{6.3.66}$$

where k is a scalar to be designed by (6.3.47) and sliding function is defined as (6.3.43):

$$s(t) = c_1 q + c_2\theta + c_3 u \tag{6.3.67}$$

where c_1, c_2, c_3 are design parameters to be determined.

Design procedure can be fulfilled with MATLAB programming (which is given in Appendix 1) by the following steps:

- $eig(A) = \begin{bmatrix} -0.6565 \\ 0.1183 + 0.3678\mathrm{i} \\ 0.1183 - 0.3678\mathrm{i} \end{bmatrix}$

A is unstable with one pear conjugate complex-roots.

- Calculate matrix (46):

$$H = \begin{bmatrix} -0.0313 & 0.0177 & -0.0034 & 0 \\ 0.0177 & -0.1640 & 0 & 0 \\ -0.0034 & 0 & -0.1820 & 0 \\ 0 & 0 & 0 & -0.3000 \end{bmatrix}, \quad eig(H) = \begin{bmatrix} -0.3000 \\ -0.1821 \\ -0.1663 \\ -0.0289 \end{bmatrix}$$

H is a negative definite matrix.

- c1 = -0.0389
- c2 = 0.0592
- c3 = -0.9975
- k = 0.0125
- h = 0.4300
- eta = 0.0900
- alpha = 0.2000
- beta =0.0200
- gamma = 0.3000
- hmax = 1.714

Published by WSEAS Press
www.wseas.org
ISBN: 978-960-474-050-5
ISSN: 1790-5117

- cTb = -10.0204

Thus all design parameters are calculated. Maximum upper bound of time delay, hmax = 1.714, is found from condition (6.3.46). A block diagram of continuous sliding mode controller for helicopter input delayed system (6.3.1), (6.3.42), (6.3.43) or (6.3.65), (6.3.66), (6.3.67) is shown in Fig. 3. This system is simulated by using MATLAB-Simulink. Continuous sliding mode controller is performed by linear Simulink blocks $s(t)$ and $u(t)$. Note that, these are not variable structure blocks, but linear blocks satisfying the sliding condition (6.3.54). Helicopter control performances are shown in Fig. 4, from which can be seen that unstable helicopter dynamics is successfully stabilized by using linear sliding mode controller. For example, settling time is about 20 sec. Reaching time is also about 20 sec. Therefore, simulation results confirmed the usefulness of the developed design methodology.

Example 5: Helicopter Smith predictor control

Now let us Smith predictor control (Fig.1) example for the same unstable helicopter dynamics (6.3.65). Multivariable block diagram is shown in Figure 5. Helicopter control system (6.3.2) and (6.3.3) with parameters (6.3.65) is simulated. Controller (6.3.3) gain parameter is calculated by using MATLAB programming command, which is given in Appendix 2:

Design parameters are calculated as follow:

e1 = -0.0389
e2 = 0.0592
e3 = -0.9975
P =
  -0.1555
  -0.2369
  -3.9899
K =
  0.6279 0.2531 0.0007

Simulation results are presented in Figure 6. From which can be seen that Smith Predictor control, also, successfully stabilizes the unstable helicopter dynamics, because the model parameters are known.

6.3.4 Conclusions

The Smith predictor method, reduction method and reduction method combined with classical discontinuous sliding mode control approaches are discussed and presented as some preliminary results. A new continuous sliding mode control design methodology based on Lagrange mean value theorem is proposed for stabilization of single input delayed systems. The Lagrange mean value theorem as a basic theorem of calculus is used for the design of linear sliding mode time-delay controller for the first time. This controller satisfies the sliding condition using a Zhou and Fisher type continuous control law eliminating the chattering effect. The constructive delay-dependent asymptotically stable sliding conditions are obtained by using the augmented Lyapunov-Krasovskii functionals and formulated in terms of simple (4×4)-matrix inequality with scalar elements. Developed design approach can be extended to robust stabilization of sliding system with unknown but bounded input delay. These contributions are the main results of the paper. Four analytical and numerical design examples are considered to illustrate the various design approaches. The maximum upper bounds of delay size are found by using simple optimization algorithms. Helicopter hover control is considered as fifth design example for illustrating the performances of smooth sliding mode approach and Smith predictor control. Unstable helicopter dynamics are successfully stabilized by using linear sliding mode time-delay controller. For example, settling time is about 20 sec. Smith predictor control result, also, is very well, because for considered example model parameters are known. Therefore, simulation results confirmed the effectiveness of the proposed design methodology. Apparently, the proposed method has a great potential in design of time-delayed controllers.

Appendix 1

```
clear; clc;
A = [-0.4 0 -0.01; 1 0 0;
     -1.4 9.8 -0.02];
```


Published by WSEAS Press
www.wseas.org
ISBN: 978-960-474-050-5
ISSN: 1790-5117

```
[V,D] = eig(A);
D     = diag(D)
% selection according to case a):
lamda_L = D(1)
c1    = V(1,1)
c2    = V(2,1)
c3    = V(3,1)
h     = 0.43
eta   = 0.09
alpha = 0.2
beta  = 0.2
gamma = 0.3
c_T   = [c1 c2 c3];
b     = [6.3; 0; 9.8];
k     = 0.8*(lamda_L+beta+gamma)/(c_T*b)
h_max = 1.714 % delay
cTb   = c_T*b
h11 = lamda_L-k*c_T*b+beta+gamma
h22 = alpha*eta-(1-eta)*beta
h33 =-alpha*(1-eta)
h44 = -gamma
H1 = [ lamda_L-k*c_T*b+beta+gamma;
       0.5*k*h*c_T*b*lamda_L;
      -0.5*k^2*h*(c_T*b)^2; 0];
H2 = [0.5*k*h*c_T*b*lamda_L;
      alpha*eta-(1-eta)*beta; 0; 0];
H3 = [-0.5*k^2*h*(c_T*b)^2; 0;
      -alpha*(1-eta); 0];
H4 = [0; 0; 0; -gamma];
H  = [H1 H2 H3 H4];
eig_H = eig(H)
```

Appendix 2

```
A=[-0.4 0 -0.01; 1 0 0; -1.4 9.8 -0.02];
b=[6.3; 0; 9.8];
[V,D]=eig(A);
e1=V(1,1);
e2=V(2,1);
e3=V(3,1);
P = [4*e1; -4*e2; 4*e3];
K = place(A,b,P)
```


Published by WSEAS Press
www.wseas.org
ISBN: 978-960-474-050-5
ISSN: 1790-5117

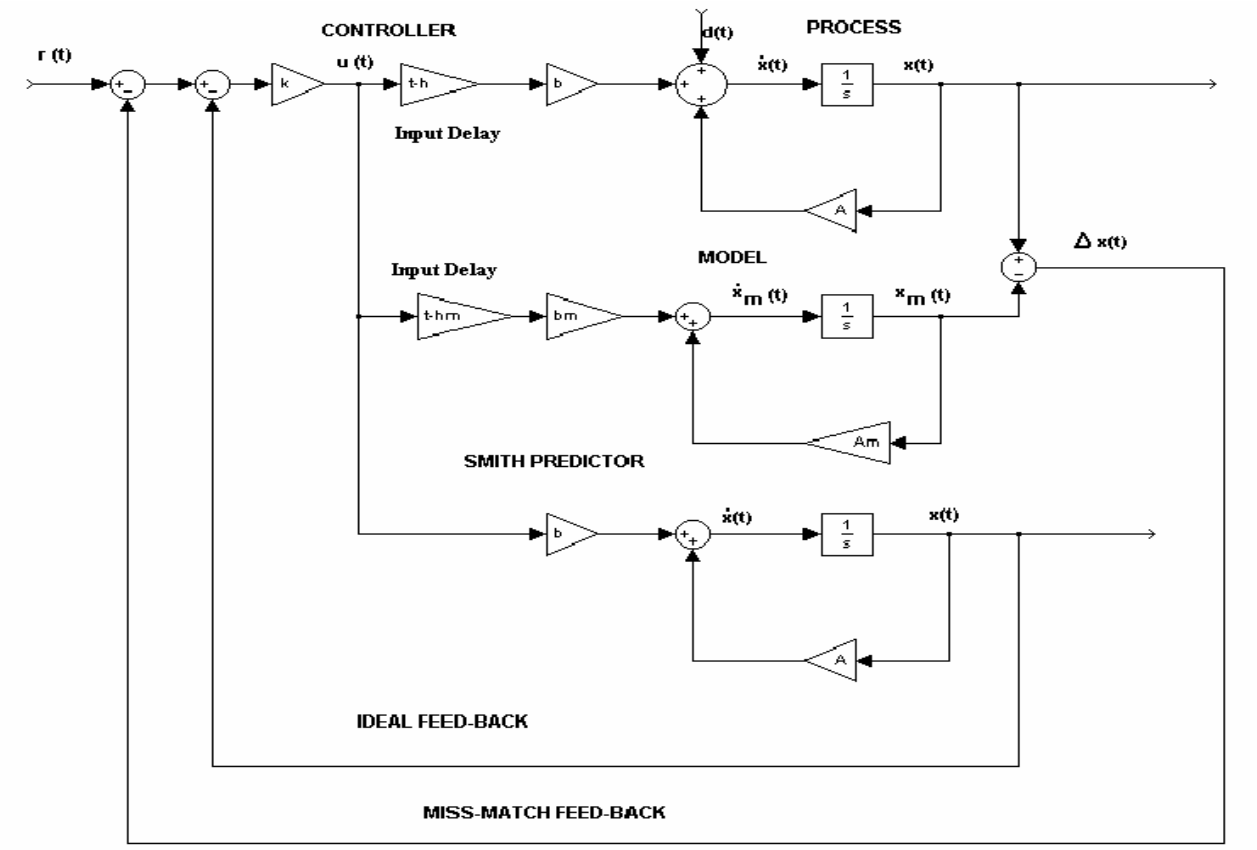

Figure 1. Modified Smith state space predictor control scheme

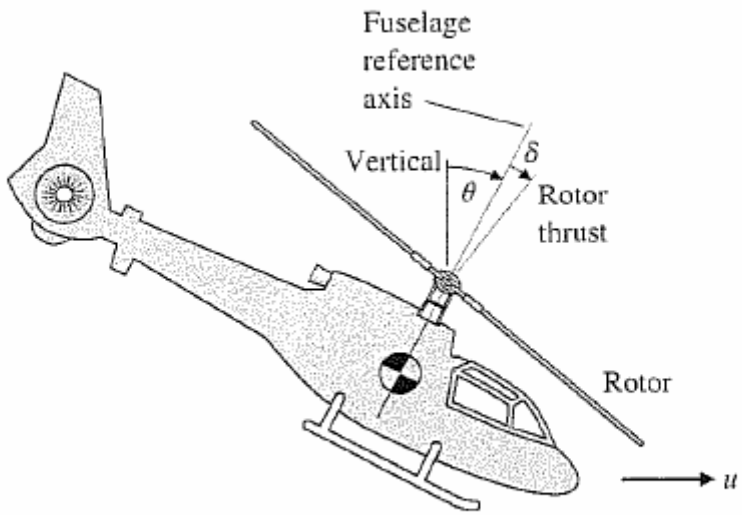

Figure 2. Helicopter.

Published by WSEAS Press
www.wseas.org
ISBN: 978-960-474-050-5
ISSN: 1790-5117

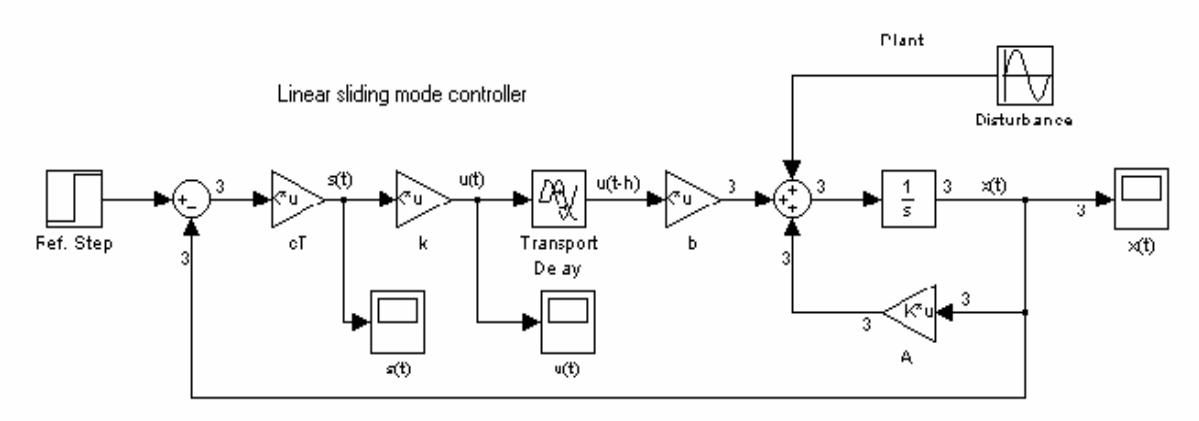

Figure 3. Block diagram of linear sliding mode controller for input-delayed system

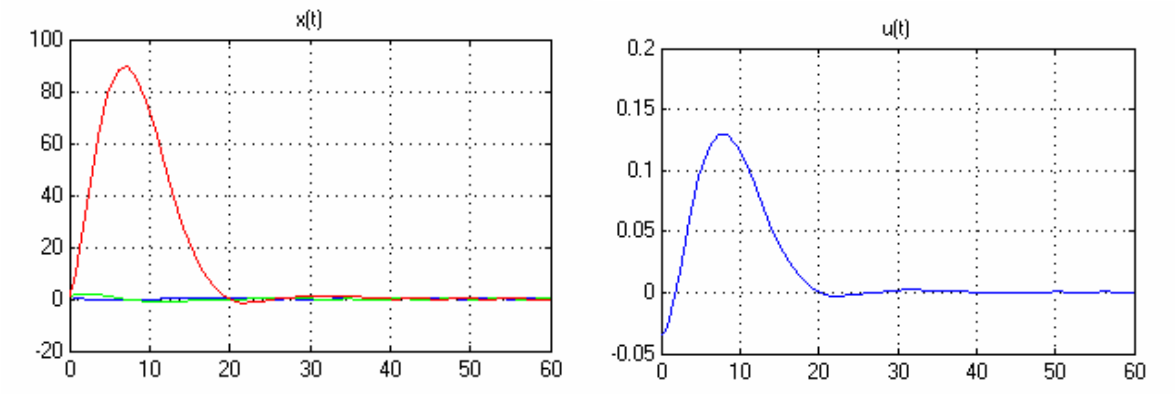

a) State time responses b) Linear sliding mode control function

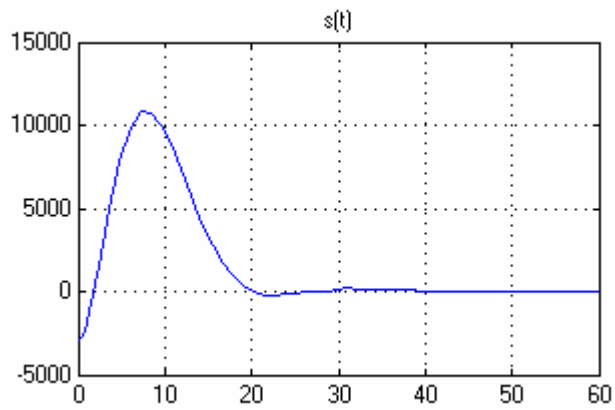

c) Sliding function

Figure 4. Smooth sliding mode control

Published by WSEAS Press
www.wseas.org
ISBN: 978-960-474-050-5
ISSN: 1790-5117

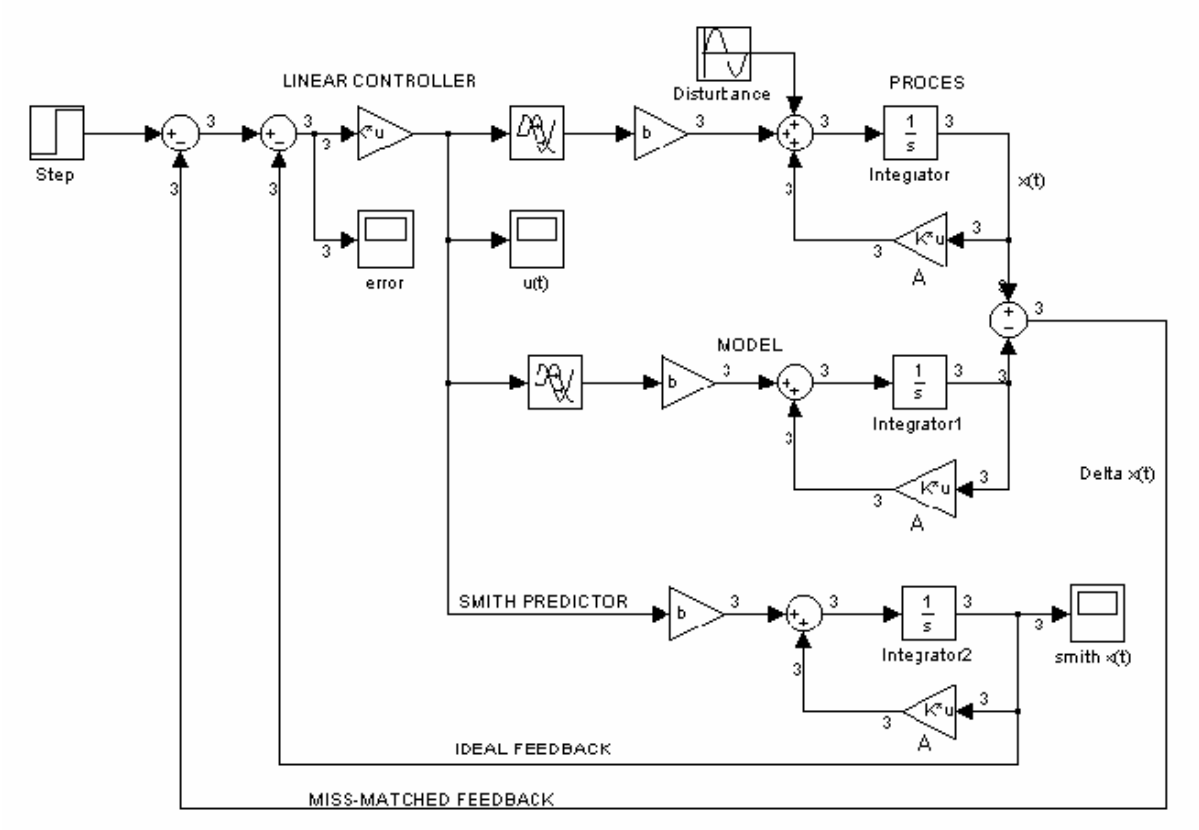

Figure 5. Smith predictor for helicopter control

x(t)

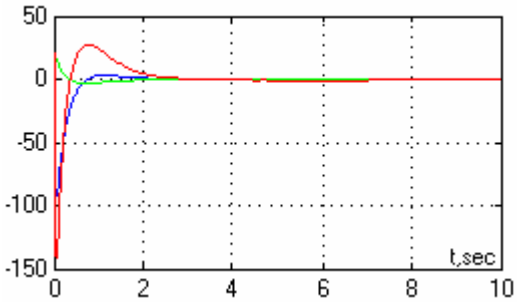

a) Smith predictor time response

Δx(t)

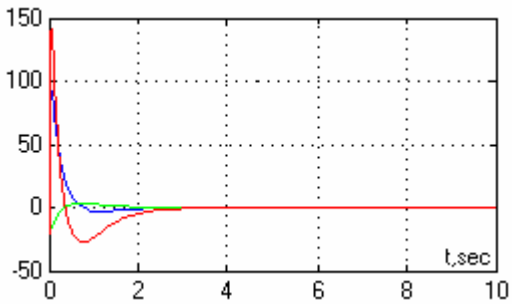

b) Feedback error time response

u(t)

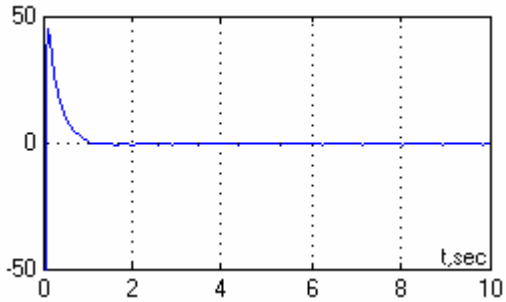

c) Smith control

Figure 6. Smith predictor control

Published by WSEAS Press
www.wseas.org
ISBN: 978-960-474-050-5
ISSN: 1790-5117

6.4 Robust stabilization of uncertain input-delayed systems by a new modified reduction method: an easy way

An easy way to robust stabilization of multivariable input-delayed systems with unmatched parameter uncertainties is considered. A new modified reduction method is developed to overcome some of inherent issues in the usage of the conventional reduction method. Then, the transformed delay-free system can be stabilized by proposed linear controller, which is designed by using only conventional Lyapunov V-function method. Global stability conditions are formulated in terms of algebraic Riccati equations and some matrix inequalities. For the comparison analysis, a simple memoryless linear controller for robust stabilization of original time-delay systems with unmatched parameter uncertainties is also designed by using a conventional Lyapunov-Krasovskii V-functional method. This analysis shows that the stability results of both approaches are coordinated. Two numerical examples with simulation results are given which show the effectiveness of our design approach.

6.4.1 Introduction

It is well known that major engineering systems for example, conventional ail-chemical process control, engine control and human-pilot control system contain a time-delay and parameter uncertainties which induced several known issues in design of robust systems. Therefore, the problem of robust stabilization of time-delay systems with parameter uncertainties still has received considerable attention by control researches.

An easy way of dealing input-delayed systems is to reduce them into delay-free ordinary systems by using well known reduction method (Kwon and Pearson, 1980) [183]. Then, the transformed linear delay-free systems can be analyzed by using a conventional Lyapunov V-function method and designed for example by pole-placement. This is an advantage of the reduction method. Remember that, unstable system also can be stabilized by reduction method. However, the reduction method suffers from a weakness that the complete reduction to a delay-free system only possible with an exact model parameters of the system. Hence, parameter uncertainties may sometimes cause problems in using the reduction method [184].

Robust stabilization problem for multiple input-delayed system with matched parameter uncertainties using the reduction method is considered by Moon, Park and Kwon (2001) [184]. However, an original time-delay system can not be completely reduced to a delay-free system due to existence of parameter uncertainties and some delay term. For this reason especially selected two Lyapunov-Krasovskii functionals are introduced to be considered. Then, global asymptotical stability conditions for transformed mixed time-delay system are formulated in terms of LMI's of new state variables z(t) and z(t-h) which can be solved using convex optimization methods. Clearly that this combined way is a long way, at least it is not an easy way, whereas Lyapunov-Krasovskii functional method itself is another useful way to robust stabilization of original time-delay systems with parameter uncertainties [185], [186], [187]. Some linear memoryless controllers for stabilization of time-delay systems with matched parameter uncertainties are designed by Choi and Chung (1995) [188], Kim, Jeung and Park (1996) [189], Su, Chu and Wang (1998) [190], Mahmoud and Muthairi (1999) [191] etc. using Lyapunov Krasovskii V-function method. Memoryless controllers have merit that they are easy to implement. In general, an overview of some recent advances and open problems in time-delay systems are given by Richard (2003) [192] and [193].

In this section, an easy way to robust stabilization of multivariable input-delayed systems with unmatched parameter uncertainties is considered. A new modified reduction method is developed to overcome some of inherent issues in the usage of the conventional reduction method. Then, the transformed delay-free system can be stabilized by proposed linear controller, which is designed using only conventional Lyapunov V-function method. Global stability conditions are formulated in terms of algebraic Riccati equations and some matrix inequalities. For the comparison analysis, s simple memoryless linear controller for robust stabilization of original time-delay systems with unmatched parameter uncertainties is also designed by using a conventional Lyapunov-Krasovskii V-functional method.

This analysis shows that the stability results of both approaches are coordinated. Two numerical examples with simulation results are given which show the effectiveness of our design approach.

6.4.2 Preliminaries and problem statement

Published by WSEAS Press
www.wseas.org
ISBN: 978-960-474-050-5
ISSN: 1790-5117

For better understanding the reduction method first let us consider a nominal input-delay system described by the following equation:

$$\dot{x}(t) = Ax(t) + B_0u(t) + B_1u(t-h)$$

(6.4.1)

with initial conditions $x(0) = x_0$ and $u(t) = \phi(t)$ for $-h \le t \le 0$, A and B are nominal constant matrices, $h > 0$ is a constant time-delay. The conventional reduction method proposed by Kwon and Pearson (1980) [183] suggests the following linear state transformation

$$z(t) = x(t) + \int_{t-h}^{t} e^{A(t-h-\theta)} B_1 u(\theta) d\theta$$

(6.4.2)

Then, input-delayed system (6.4.1) can be transformed to following delay-free ordinary system:

$$\dot{z}(t) = \dot{x}(t) + \frac{d}{dt}\int_{t-h}^{t} e^{A(t-h-\theta)} B_1 u(\theta) d\theta$$

$$= Ax(t) + B_0u(t) + B_1u(t-h) + e^{A(t-h-\theta)} B_1 u(\theta)\,|_{t-h}^{t} + A\int_{t-h}^{t} e^{A(t-h-\theta)} B_1 u(\theta) d\theta$$

$$= Ax(t) + B_0u(t) + B_1u(t-h) + e^{-Ah} B_1 u(t) - B_1u(t-h) + A\int_{t-h}^{t} e^{A(t-h-\theta)} B_1 u(\theta) d\theta$$

$$= Az(t) + (B_0 + e^{-Ah} B_1)u(t)$$

(6.4.3)

or $\dot{z}(t) = Az(t) + Bu(t)$

(6.4.4)

where

$$B = B_0 + e^{-Ah} B_1$$

(6.4.5)

Then a linear controller

$$u(t) = -Kz(t)$$

(6.4.6)

can be used for stabilization of complete delay-free system (6.4.3). The gain matrix K can be freely chosen using any design method for example pole placement. This approach is extended for stabilization of input-delayed system with matched parameter uncertainties by Moon, Park and Kwon, (2001) [184]. However, as mentioned in Section 1 the transformed system again is obtained in terms of old and new state variables x(t), z(t), because of existence of parameter uncertainties. Moreover, the transformed system is a time-delay system. For avoiding these difficulties two special selected Lyapunov-Krasovskii functional combined with inner-product inequality and integral inner product inequality (Noldus, 1985) [194] are used. The stability results are formulated in terms of LMI's of new state variables z(t), z(t-h). This approach is a long way. Thus, a question arises that whether exist a new modified state transformation similar to (6.4.2) which can be reduced the original input-delayed system with parameter uncertainties to complete delay-free system. A main goal of this paper is to find a new linear state transformation for above-mentioned class of systems after that a robust linear controller can be designed by using easy and convenient methods.

6.4.3 A modified reduction method

Consider the following input-delayed system with parameter uncertainties

$$\dot{x}(t) = (A + \Delta A(\sigma))x(t) + B_0u(t) + B_1u(t-h) \qquad (6.4.7)$$

where in addition to (1) $\Delta A(\sigma)$ is a parameter uncertainty. It is assumed that

$$\max_{\sigma}\|\Delta A(\sigma)\| = \max_{\sigma}\sqrt{\lambda_{\max}(\Delta A^T(\sigma)\Delta A(\sigma))} = \alpha \qquad (6.4.8)$$

Our goal is to design a linear controller such that robustly stabilizes the transformed input-delayed system for all admissible uncertainties.

Let us consider a modified linear state transformation

Published by WSEAS Press
www.wseas.org
ISBN: 978-960-474-050-5
ISSN: 1790-5117

$$z(t) = x(t) + \int_{t-h}^{t} e^{(A+\max_{\sigma}\|\Delta A(\sigma)\| I_n)(t-h-\theta)} B_1 u(\theta) d\theta \tag{6.4.9}$$

which is the key point of this method. Then, in according to (6.4.3), the input-delayed system (6.4.7) can be transformed to following mixed delay-free system:

$$\dot{z}(t) = (A + \Delta A(\sigma))x(t) + B_0 u(t) + B_1 u(t-h) + e^{(A+\alpha I_n)(t-h-\theta)} B_1 u(\theta)\,|_{t-h}^{t} + (A + \alpha I_n) \int_{t-h}^{t} e^{(A+\alpha I_n)(t-h-\theta)} B_1 u(\theta) d\theta$$

$$= (A + \Delta A(\sigma))x(t) + B_0 u(t) + B_1 u(t-h) + e^{-(A+\alpha I_n)h} B_1 u(t) - B_1 u(t-h) + (A + \alpha I_n) \int_{t-h}^{t} e^{(A+\alpha I_n)(t-h-\theta)} B_1 u(\theta) d\theta$$

$$= A\left[x(t) + \int_{t-h}^{t} e^{(A+\alpha I_n)(t-h-\theta)} B_1 u(\theta) d\theta \right] + \left[B_0 + e^{-(A+\alpha I_n)h} B_1 \right] u(t) + \Delta A(\sigma) x(t) + \alpha \int_{t-h}^{t} e^{(A+\alpha I_n)(t-h-\theta)} B_1 u(\theta) d\theta$$

$$\dot{z}(t) = Az(t) + Bu(t) + \Delta A(\sigma) x(t) + \alpha \int_{t-h}^{t} e^{(A+\alpha I_n)(t-h-\theta)} B_1 u(\theta) d\theta$$

(6.4.10)

where $B = B_0 + e^{-(A+\alpha I_n)h} B_1$

Let us select the linear controller as follows:

$$u(t) = -kB^T P z(t)$$

(6.4.11)

where P is a symmetric positive-definite matrix, k is a scalar gain to be selected.

The stabilization conditions are presented in the following theorem.

Theorem 1: The mixed delay-free system (6.4.10) driven by linear controller (6.4.11) is robustly globally asymptotically stable, if there exist positive definite matrices P, Q, R and a scalar gain k such that the following algebraic Riccati equation has a positive definite solution

$$A^T P + PA - 2kPBB^T P = -Q, \; Q = Q^T > 0$$

(6.4.12a)

and holds $Q - 3\alpha\lambda_{\max}(P) I_n = R_1, \; R_1 = R_1^{\,T} > 0$

(6.4.12b)

or collecting in one equation

$$A^T P + PA - 2kPBB^T P + 3\alpha\lambda_{\max}(P) I_n = -R_1$$

(6.4.12c)

Proof: Choose a Lyapunov function candidate as follows

$$V(z(t)) = z^T(t) P z(t)$$

(6.4.13)

where P is a symmetric positive definite matrix.

The time derivative of (6.4.13) along (6.4.10) is given by

$$\dot{V} = z^T(t)(A^T P + PA) z(t) + 2z^T(t) P [\Delta A(\sigma) x(t) + \max_{\sigma}\|\Delta A(\sigma)\| \int_{t-h}^{t} e^{(A+\alpha I_n)(t-h-\theta)} B_1 u(\theta) d\theta]$$

$$-2kz^T(t) PBB^T P z(t) = z^T(t)(A^T P + PA - 2kPBB^T P) z(t) + 2z^T(t) P\, \Delta A(\sigma) x(t) \tag{6.4.14}$$

$$+ 2z^T(t) P \max_{\sigma}\|\Delta A(\sigma)\| \int_{t-h}^{t} e^{(A+\alpha I_n)(t-h-\theta)} B_1 u(\theta) d\theta$$

Since the following very well known Schwarz's inequalities hold

$$2z^T(t) P\, \Delta A(\sigma) x(t) \le 2\lambda_{\max}(P) \max_{\sigma}\|\Delta A(\sigma)\| \|z(t)\| \|x(t)\| \tag{6.4.15}$$

$$2z^T(t) P \max_{\sigma}\|\Delta A(\sigma)\| \int_{t-h}^{t} e^{(A+\alpha I_n)(t-h-\theta)} B_1 u(\theta) d\theta$$

Published by WSEAS Press
www.wseas.org
ISBN: 978-960-474-050-5
ISSN: 1790-5117

$$\leq 2\lambda_{\max}(P)\max_{\sigma}\|\Delta A(\sigma)\|\|z(t)\|\left\|\int_{t-h}^{t} e^{(A+\alpha I_n)(t-h-\theta)}B_1u(\theta)d\theta\right\| \tag{6.4.16}$$

Then, using notation (6.4.12a) and rearranging (6.4.14) we have

$$\dot{V}(z(t)) \leq -z^T(t)Qz(t) + 2\lambda_{\max}(P)\max_{\sigma}\|\Delta A(\sigma)\|\|z(t)\|\|x(t)\|$$
$$+ 2\lambda_{\max}(P)\max_{\sigma}\|\Delta A(\sigma)\|\|z(t)\|\left\|\int_{t-h}^{t} e^{(A+\alpha I_n)(t-h-\theta)}B_1u(\theta)d\theta\right\| \tag{6.4.17}$$

Since $\quad 2ab \leq a^2 + b^2$ (6.4.18)

where a and b are some scalars.

Therefore

$$2\|z(t)\|\|x(t)\| \leq \|z(t)\|^2 + \|x(t)\|^2 = z^T(t)z(t) + x^T(t)x(t) \tag{6.4.19}$$

$$2\|z(t)\|\left\|\int_{t-h}^{t} e^{(A+\alpha I_n)(t-h-\theta)}B_1u(\theta)d\theta\right\| \leq z^T(t)z(t)$$
$$+\left[\int_{t-h}^{t} e^{(A+\alpha I_n)(t-h-\theta)}B_1u(\theta)d\theta\right]^T\left[\int_{t-h}^{t} e^{(A+\alpha I_n)(t-h-\theta)}B_1u(\theta)d\theta\right] \tag{6.4.20}$$

Then,

$$\dot{V}(z(t)) \leq -z^T(t)Qz(t) + \alpha\lambda_{\max}(P)\left[z^T(t)z(t) + x^T(t)x(t)\right] + \alpha\lambda_{\max}(P)\left[z^T(t)z(t)\right.$$
$$\left.+\left[\int_{t-h}^{t} e^{(A+\alpha I_n)(t-h-\theta)}B_1u(\theta)d\theta\right]^T\left[\int_{t-h}^{t} e^{(A+\alpha I_n)(t-h-\theta)}B_1u(\theta)d\theta\right]\right]$$
$$= -z^T(t)Qz(t) + 2\alpha\lambda_{\max}(P)z^T(t)z(t) + \alpha\lambda_{\max}(P)\left[x^T(t)x(t)\right. \tag{6.4.21}$$
$$\left.+\left[\int_{t-h}^{t} e^{(A+\alpha I_n)(t-h-\theta)}B_1u(\theta)d\theta\right]^T\left[\int_{t-h}^{t} e^{(A+\alpha I_n)(t-h-\theta)}B_1u(\theta)d\theta\right]\right]$$

Moreover,

$$v^Tv + w^Tw \leq (v+w)^T(v+w) \quad \text{for} \quad v+w \neq 0$$

where v and w are some vectors.

Therefore,

$$x^T(t)x(t) + \left[\int_{t-h}^{t} e^{(A+\alpha I_n)(t-h-\theta)}B_1u(\theta)d\theta\right]^T\left[\int_{t-h}^{t} e^{(A+\alpha I_n)(t-h-\theta)}B_1u(\theta)d\theta\right]$$
$$\leq \left[x(t) + \int_{t-h}^{t} e^{(A+\alpha I_n)(t-h-\theta)}B_1u(\theta)d\theta\right]^T\left[x(t) + \int_{t-h}^{t} e^{(A+\alpha I_n)(t-h-\theta)}B_1u(\theta)d\theta\right] = z^T(t)z(t) \tag{6.4.23}$$

Then, (6.4.21) reduces to:

$$\dot{V}(z(t)) \leq -z^T(t)Qz(t) + 2\alpha\lambda_{\max}(P)z^T(t)z(t) + \alpha\lambda_{\max}(P)z^T(t)z(t)$$
$$= -z^T(t)\left[Q - 3\alpha\lambda_{\max}(P)\right]z(t) = -z^T(t)R_1z(t) < 0 \tag{6.4.24}$$

if satisfied (6.4.12a) and (6.4.12b) or (6.4.12c).

Therefore, mixed delay-free system (6.4.10), (6.4.11) is robustly globally asymptotically stable. Theorem 1 is proved. Now, let us consider an alternative proof of Theorem 1.

Second proof: From (6.4.9):

$$\int_{t-h}^{t} e^{(A+\max_{\sigma}\|\Delta A(\sigma)\|I_n)(t-h-\theta)}B_1u(\theta)d\theta = z(t) - x(t) \tag{6.4.25}$$

Then, (14) can be rewritten as follows:

$$\dot{V} = -z^T(t)Qz(t) + 2z^T(t)P\,\Delta A(\sigma)x(t) + 2z^T(t)P\max_{\sigma}\|\Delta A(\sigma)\|\big(z(t) - x(t)\big) \tag{6.4.26}$$

Published by WSEAS Press
www.wseas.org
ISBN: 978-960-474-050-5
ISSN: 1790-5117

$$\leq -z^T(t)Qz(t) + 2\alpha\lambda_{\max}(P)\|z(t)\|\|x(t)\| + 2\alpha z^T(t)P(z(t)-x(t))$$

Since,

$$z^T(t)P(z-x) \leq \lambda_{\max}(P)\|z\|\|\|z\|-\|x\|\| \leq \lambda_{\max}(P)\|z\|\|z-x\| \tag{6.4.27}$$

because [195]: $0 < \|\|z\|-\|x\|\| \leq \|z-x\|$ (6.4.28)

Then, (26) reduces to:

$$\begin{aligned}\dot{V} &\leq -z^T(t)Qz(t) + 2\alpha\lambda_{\max}(P)\|z(t)\|\|x(t)\| + 2\alpha\lambda_{\max}(P)\|z(t)\|^2 - 2\alpha\lambda_{\max}(P)\|z(t)\|\|x(t)\| \\ &= -z^T(t)[Q - 2\alpha\lambda_{\max}(P)I_n]z(t) = -z^T(t)R_2 z(t) < 0\end{aligned} \tag{6.4.29}$$

where

$$R_2 = Q - 2\alpha\lambda_{\max}(P)I_n \quad \text{and} \quad R_2 > R_1 > 0 \tag{6.4.30}$$

Hence system (6.4.10), (6.4.11) is robustly globally asymptotically stable. Therefore, an easy way is fixed soundly because the results of two different ways coincide.

6.4.4 Comparison analysis: Lyapunov-Krasovskii functional approach

New, for the comparison analysis let us consider the robust memoryless stabilization of the original input-delayed system (6.4.7) by using conventional Lyapunov-Krasovskii functional method. For which let us select a linear controller as

$$u(t) - \kappa B_0^T Px(t) \tag{6.4.31}$$

Then, robust stability conditions can be presented as follows.

Theorem 2: The input-delayed system (6.4.7) with unmatched parameter perturbations driven by memoryless linear controller (6.4.31) is robustly globally asymptotically stable, if the following conditions are satisfied:

$$A^T P + PA - 2\kappa PB_0 B_0^T P + 2\alpha\lambda_{\max}(P)I_n + R = -R_3 \tag{6.4.32}$$

$$H = \begin{bmatrix} R_3 & \kappa PB_1 B_0^T P \\ \kappa PB_1 B_0^T P & R \end{bmatrix} > 0 \tag{6.4.33a}$$

or its Schur complement

$$R_3 - \kappa^2 PB_1 B_0^T PR^{-1} PB_1 B_0^T P > 0 \tag{6.4.33b}$$

where P, R and R_3 are positive definite symmetric matrices.

Proof: Choose a Lyapunov-Krasovskii functional candidate as follows:

$$V(x(t)) = x^T(t)Px(t) + \int_{t-h}^{t} x^T(\theta)Rx(\theta)d\theta \tag{6.4.34}$$

where P and R are positive definite symmetric matrices to be selected.

Then, the time-derivative of (6.4.34) along (6.4.7), (6.4.31) can be calculated as follows:

$$\begin{aligned}\dot{V}(x(t),x(t-h)) &= x^T(t)(A^T P + PA)x(t) - 2kx^T(t)PB_0 B_0^T Px(t) \\ &+ 2x^T(t)P\Delta A(\sigma)x(t) - 2kx^T(t)PB_1 B_0^T Px(t-h) + x^T(t)Rx(t) - x^T(t-h)Rx(t-h)\end{aligned} \tag{6.4.35}$$

Since,

$$2x^T(t)P\Delta A(\sigma)x(t) \leq 2\alpha\lambda_{\max}(P)\|x(t)\|^2 = 2\alpha\lambda_{\max}(P)x^T(t)x(t) \tag{6.4.36}$$

Then,

$$\begin{aligned}V(x(t),x(t-h)) &\leq x^T(t)(A^T P + PA - 2kPB_0 B_0^T P + 2\alpha\lambda_{\max}(P)I_n + R)x(t) \\ &- 2kx^T(t)PB_1 B_0^T Px(t-h) - x^T(t-h)Rx(t-h) \\ &= -\begin{bmatrix} x(t) \\ x(t-h) \end{bmatrix}^T \begin{bmatrix} R_3 & \kappa PB_1 B_0^T P \\ \kappa PB_1 B_0^T P & R \end{bmatrix} \begin{bmatrix} x(t) \\ x(t-h) \end{bmatrix} = -\begin{bmatrix} x(t) \\ x(t-h) \end{bmatrix}^T H \begin{bmatrix} x(t) \\ x(t-h) \end{bmatrix} < 0\end{aligned} \tag{6.4.37}$$

if the conditions (6.4.32) and (6.4.33) are satisfied.

Therefore, original time-delay system (6.4.7), (6.4.31) is robustly globally asymptotically stable.

6.4.5 Example 1

Consider the following input-delayed system with parameters given by (Cheres, Palmer and Gutman, 1990) [196].

Published by WSEAS Press
www.wseas.org
ISBN: 978-960-474-050-5
ISSN: 1790-5117

$$\dot{x}(t) = (A + \Delta A)x(t) + B_1 u(t - 0.2) \tag{6.4.38}$$

where

$A = \begin{bmatrix} 0 & 1 \\ -1.25 & -3 \end{bmatrix}$, $\Delta A = \begin{bmatrix} 0 & 0 \\ \nu \sin t & 0 \end{bmatrix}$, $B_1 = \begin{bmatrix} 0 \\ 1 \end{bmatrix}$ where $|\nu \sin t| \le \rho_\nu$.

Design procedure using an easy way for transformed system (6.4.10) can be performed as fallows:

- Solve algebraic Riccati equation (6.4.12a) and check condition (6.4.12b) by the following program written in Matlab:

```
clear
clc
v=0.21
t=pi/2
A=[0 1;-1.25 -3]
deltaA=[0 0; v*sin(t) 0]
ro=v*sin(t)
Q=[1 0; 0 1]
h=0.2
In=Q
alfa=ro
k=5
B1=[0;1];
B=expm(-(A+alfa*In)*h)*B1
B2=2*k*B*B'
P=ARE(A,B2,Q);
Peig=eig(P)
lamda_max=max(Peig)
R1=1-3*alfa*lamda_max
```

where

$v = 0.2100$

$t = 1.5708$

$A = \begin{bmatrix} 0 & 1.0000 \\ -1.2500 & -3.0000 \end{bmatrix}$, $\Delta A = \begin{bmatrix} 0 & 0 \\ 0.2100 & 0 \end{bmatrix}$,

$\rho = 0.2100$

$Q = \begin{bmatrix} 1 & 0 \\ 0 & 1 \end{bmatrix}$

$h = 0.2000$

$I_n = \begin{bmatrix} 1 & 0 \\ 0 & 1 \end{bmatrix}$

$\alpha = 0.2100$

$k = 5$

$B_1 = \begin{bmatrix} 0 \\ 1 \end{bmatrix}$, $B = \begin{bmatrix} -0.2606 \\ 1.7112 \end{bmatrix}$, $B_2 = \begin{bmatrix} 0.6.791 & -4.4594 \\ -4.4594 & 29.2823 \end{bmatrix}$, $P = \begin{bmatrix} 1.5102 & 0.3151 \\ 0.3151 & 0.1829 \end{bmatrix}$

$eig(P) = 1.5813,\ \ 0.1119$

$\lambda_{\max}(P) = 1.5813$

$B^T P = \begin{bmatrix} 0.1456 \\ 0.2309 \end{bmatrix}$, $R_1 = \begin{bmatrix} 0.0038 & 0 \\ 0 & 0.0038 \end{bmatrix} > 0$

which is a symmetric positive definite matrix. Thus, the design parameters are obtained.

6.4.6 Example 2

Again consider input-delayed system (6.4.38) stabilizing by controller (6.4.31) with parameters given in Example 1. Design procedure using Lyapunov-Krasovskii functional method can be performed by following steps:

Published by WSEAS Press
www.wseas.org
ISBN: 978-960-474-050-5
ISSN: 1790-5117

- Solve algebraic Riccati equation (6.4.32) and check condition (6.4.33) by the following program written in Matlab:

```
clear
clc
v=0.21
t=pi/2
A=[0 1;-1.25 -3]
deltaA=[0 0; v*sin(t) 0]
ro=v*sin(t)
Q=[1 0; 0 1]
h=0.2
In=Q
alfa=ro
k=6
B1=[0;1]
B=expm(-(A+alfa*In)*h)*B1
Aeig=eig(A)
Bo=[0; 0]
B3=2*k*Bo*Bo'
P=ARE(A,B3,Q)
Peig=eig(P)
lamda_max=max(Peig)
Q1=In
Rline=Q1-2*alfa*lamda_max*Q1
R=Rline/2
R3=Rline-R
```

where

$v = 0.2100$

$t = 1.5708$

$A = \begin{bmatrix} 0 & 1.0000 \\ -1.2500 & -3.0000 \end{bmatrix}, \ \Delta A = \begin{bmatrix} 0 & 0 \\ 0.2100 & 0 \end{bmatrix}$

$\rho = 0.2100$

$Q = \begin{bmatrix} 1 & 0 \\ 0 & 1 \end{bmatrix}$

$h = 0.2000$

$I_n = \begin{bmatrix} 1 & 0 \\ 0 & 1 \end{bmatrix}$

$\alpha = 0.2100$

$k = 6$

$B_1 = \begin{bmatrix} 0 \\ 1 \end{bmatrix}$

$B = \begin{bmatrix} -0.2606 \\ 1.7112 \end{bmatrix}$

$eig(A) = \begin{bmatrix} -0.5000 \\ -2.5000 \end{bmatrix}$

$B_0 = \begin{bmatrix} 0 \\ 0 \end{bmatrix}, \ B_3 = \begin{bmatrix} 0 & 0 \\ 0 & 0 \end{bmatrix}, \ P = \begin{bmatrix} 1.5750 & 0.4000 \\ 0.4000 & 0.3000 \end{bmatrix}$

$eig(P) = 1.6901, \ 0.1849$

$\lambda_{\max} = 1.6901$

$Q_1 = \begin{bmatrix} 1 & 0 \\ 0 & 1 \end{bmatrix}, \ \overline{R} = \begin{bmatrix} 0.2902 & 0 \\ 0 & 0.2902 \end{bmatrix}, \ R = R_3 = \begin{bmatrix} 0.1451 & 0 \\ 0 & 0.1451 \end{bmatrix}$

Published by WSEAS Press
www.wseas.org
ISBN: 978-960-474-050-5
ISSN: 1790-5117

Note that, the matrices P, R and R_3 are positive definite. But, varying of parameter k does not influence the solution of (6.4.32), because B_0 is zero vector in this example.

6.4.7 Simulation results

A new configuration of modified reduction scheme is shown in Fig. 1. Time-delay system (6.4.7), (6.4.10), (6.4.25), (6.4.11) with parameters of system (6.4.38) is simulated. Time response of original open-loop system is shown in Fig.2, time response of transformed closed-loop system is shown in Fig. 3 and control function is shown in Fig. 4. Closed-loop system is stable. Block diagram of original closed-loop input-delayed system (6.4.7), (6.4.31) is shown in Fig. 5. Fig.6 and Fig. 7 show that the system is stable. These results are coordinated very well. Simulation results show the effectiveness of our design approach.

6.4.8 Conclusions

An easy way to robust stabilization of multivariable input-delayed systems with unmatched parameter uncertainties is considered. A new modified reduction method is developed to overcome some of inherent issues in the usage of the conventional reduction method. Then, the transformed delay-free system can be stabilized by proposed linear controller, which is designed using only conventional Lyapunov V-function method. Global stability conditions are formulated in terms of algebraic Riccati equations and some matrix inequalities. For the comparison analysis, a simple memoryless linear controller for robust stabilization of original time-delay systems with unmatched parameter uncertainties is also designed by using a conventional Lyapunov-Krasovskii V-functional method. This analysis shows that the stability results of both approaches are coordinated. Two numerical examples with simulation results are given which show the effectiveness of our design approach.

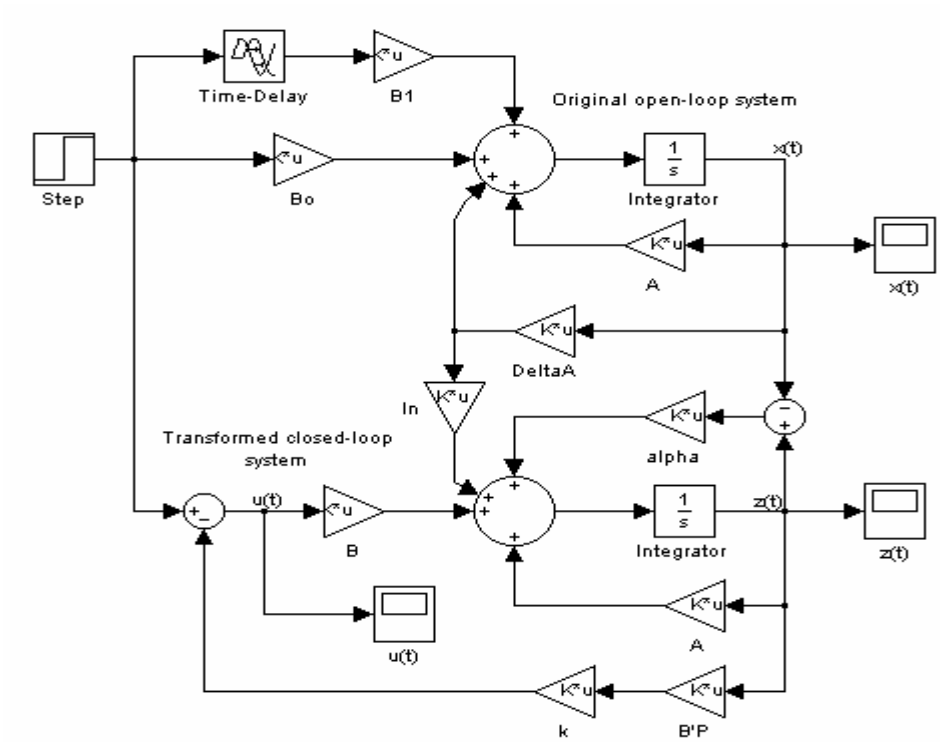

Fig. 1. A new configuration of modified reduction scheme

Published by WSEAS Press
www.wseas.org
ISBN: 978-960-474-050-5
ISSN: 1790-5117

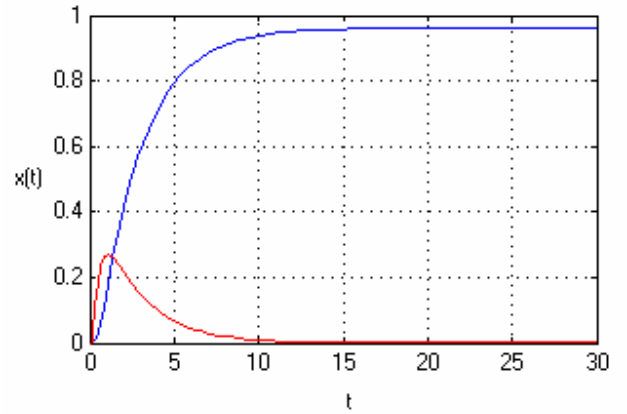

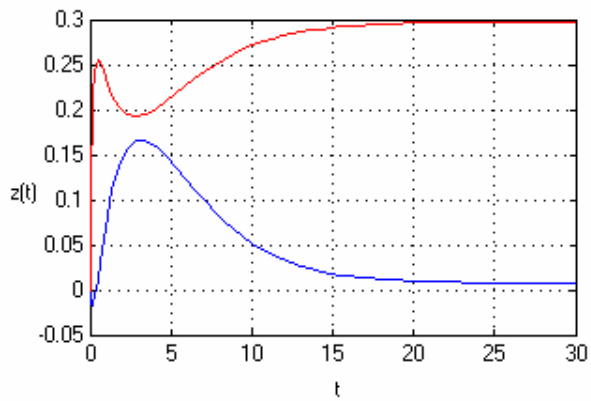

Fig. 2. Time response of original open-loop system Fig. 3. Time response of transformed closed-loop system

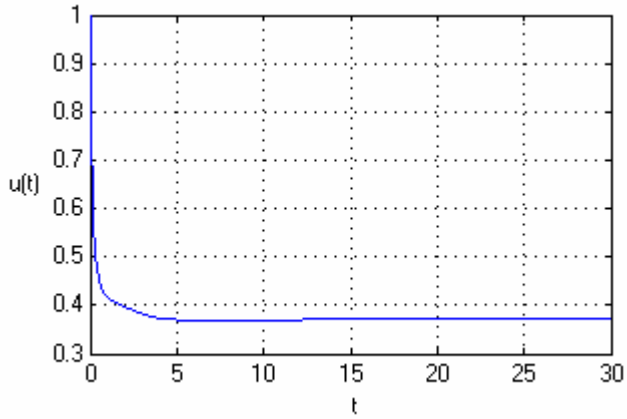

Fig. 4. Control function

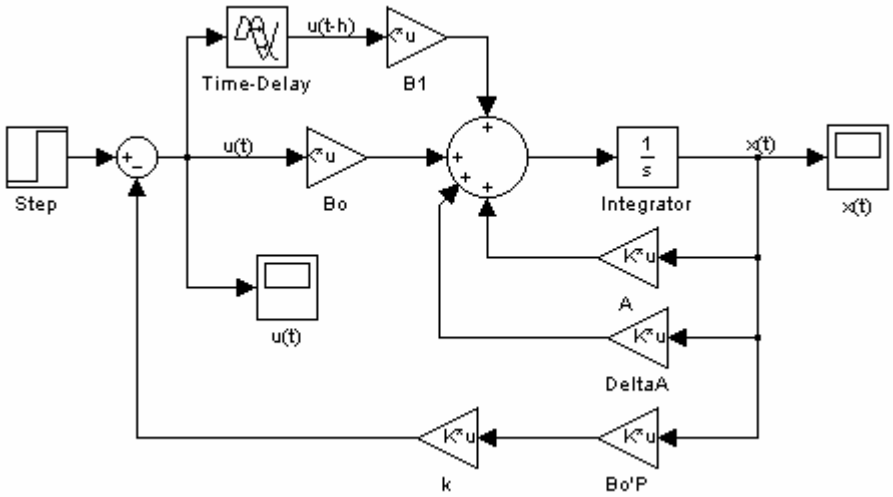

Fig. 5. Block diagram of original closed-loop input delayed system

Published by WSEAS Press
www.wseas.org
ISBN: 978-960-474-050-5
ISSN: 1790-5117

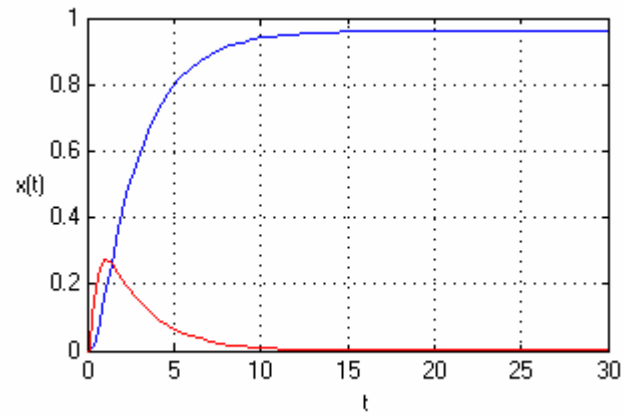

Fig. 6. Time response of original closed-loop system

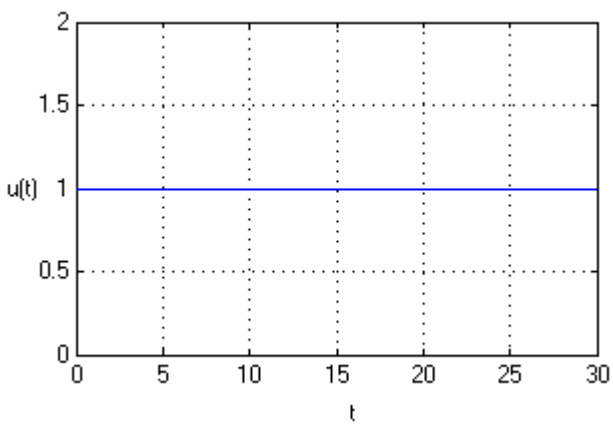

Fig. 7. Control function

6.5 References

[1] Krasovskii, N.N., 1963, *Stability of Motion*, Stanford University Press.

[2] Hale, J.K. and Lunel, S.M.V., 1993, *Introduction to Functional Differential Equations*, New York: Springer-Verlag.

[3] Elsgolz, L.E. and Norkin, S.B., 1973, *Introduction to Theory and Applications of Differential Equations with Deviating Arguments*. New York: Academic Press.

[4] Su, T.J. and Huang, C.G., 1992, Robust stability of delay-dependence for linear uncertain systems, *IEEE Transactions on Automatic Control*, vol. 37, no. 10, pp. 1656-1659.

[5] Shyu, K.K and Yan, J.J., 1993, Robust stability of uncertain time-delay systems and its stabilization by variable structure control, *Int. J. Contr.*, vol. 57, no. 1, pp. 237-247.

[6] Niculescu, S.I., 1998, H_∞ memoryless control with an α-stability constraint for time-delay systems: an LMI approach, *IEEE Transactions on Automatic Control*, vol. 43, no. 5, pp. 739-743.

[7] Niculescu, S.I., de Souza, C.E., Dugard, L. and Dion, J.M., 1998, Robust exponential stability of uncertain systems with time-varying delays', *IEEE Transactions on Automatic Control*, vol. 43, no. 5, pp. 743-748.

[8] Cao, Y.Y., Sun, Y.X. and Chang C., 1988, Delay-dependent robust stabilization of uncertain systems with multiple state delays', *IEEE Transactions on Automatic Control*, vol. 43, no. 11, pp. 1608-1612.

[9] Chang, C., Tang, B. and Sun Y.X., 1998, Decentralized stabilization of large-scale uncertain systems with state delays – LMI's approach', *In Proc. 8th Symposium on Large Scale Systems: Theory and Applications*, Rio Patras, Greece, pp. 201-206.

[10] Tchangani, A.P., Dambrine, M. and Richard, J.P., 1998, Robust stability of large-scale systems with aftereffect', *In Proc. 8th symposium on Large Scale Systems: Theory and Applications*, Rio Patras, Greece, pp. 405-410.

[11] Kolmanovskii, V.B., Niculescu, S.I. and Richard, J.P., 1999, On the Lyapunov-Krasovskii functionals for stability analysis of linear delay systems, *International Journal of Control*, vol. 72, no. 4, pp. 374-384.

[12] Kolmanovskii, V.B. and Richard, J.P., 1999, Stability of some linear systems with delays, *IEEE Trans. Automatic Control*, vol. 44, no. 5, pp. 984-989.

[13] Fridman, E., 2001, New Lyapunov-Krasovskii functionals for stability of linear retarded and neutral type systems, *Systems and Control Letters*, vol. 43, pp. 30-319.

[14] Fridman, E. and Shaked, U., 2003, Delay-dependent stability and H_∞ control: constant and time-varying delays, *International Journal of Control*, vol. 76, no. 1, pp. 48-60.

[15] Park, P.G., 1999, A delay-dependent stability criterion for systems with uncertain time-invariant delays, *IEEE Transactions on Automatic Control*, vol. 44, no. 4, pp. 876-877.

[16] Niculescu, S.I., Verriest, E.I., Dugard, L. and Dion, J.M., 1998, Stability and robust stability of time-delay systems: A guided tour, *In Stability and Control of Time-delay Systems* (Eds) L. Dugard and E.I. Verriest, London: Springer-Verlag, pp. 1-71.

Published by WSEAS Press
www.wseas.org

ISBN: 978-960-474-050-5
ISSN: 1790-5117

[17] Niculescu, S.I., Verriest, E.I., Dion, J.M. and Dugard, L., 1999, Stability of linear systems with delayed state: A guided tour' *In Proc. IFAC International Workshop on Linear Time-Delay Systems* (Eds) J.M. Dion, L. Dugard and M Fliess. Grenobre, France, 6-7 July 1998, Pergamon IFAC, Oxford UK, pp.31-38.
[18] Repin, Yu.M., 1965, Quadratic Lyapunov functionals for systems with delay', *Prikl. Mat. Mekh*, vol.29, No 3,pp. 564-566, (in Russian).
[19] Jafarov, E.M., 1998, State feedback sliding mode control for SISO systems with-delay' *In Proc. IFAC LSS'98 Large Scale Systems: Theory and Applications*, July 15-17, 1998, Rio Patras, Greece, pp. 195-200.
[20] Jafarov, E.M., 2001, Comparative analysis of simple improved delay-dependent stability criterions for linear time-delay systems: An augmented functional approach' *In Proc. of American Control Conference ACC'2001*, Crystal Gateway Marriott Arlington, Washington, Virginia, June 25-27, pp.3389-3394.
[21] Kreindler, E. and Jameson, A., 1972, Conditions for non-negativeness of partitioned matrices', *IEEE Transactions on Automatic Control*, vol. 17, pp. 147-148.
[22] Boyd, S., El Ghaoi, L., Feron, E. and Ballakrishnan, V., 1994, Linear Matrix Inequalities in System and Control Theory. PA: SIAM, 15, Philadelphia.
[23] Mahmoud, M.S. and Al-Muthairi, N.F., 1994, Design of robust controllers for time-delay systems, Transactions on Automatic Control, vol.39, no.5, pp. 995-999.
[24] Thomas, Jr., G.B. and Finney, R.L., 1992, Calculus, Addison-Wesley Publishing Company, 8th Edition.
[25] Bermant, A.F., 1964, Brief Course of Mathematical Analysis, Moscow: Nauka, (in Russian).
[26] Smith, O.J.M, 1957, Closer control of loops with dead time. Chemical Engineering Progress, vol. 53, pp.217-219.
[27] Smith, O.J.M, 1958, Feedback Control Systems, New York: McGraw-Hill.
[28] Marshall, J. E., 1974, Extensions of O. J. Smith's method to digital and other systems. International Journal of Control, vol. 19, no. 5 pp. 933-939.
[29] Aleviskas, G. and Seborg D.E., 1973, An extension of the Smith Predictor method to multivariable linear systems containing time delays. International Journal of Control vol. 3., no. 17, pp. 541-551
[30] Watanabe, K., and Ito, M., 1984, A process-model control for the linear systems with delay. IEEE Transactions on Automatic Control, vol. AC-26, no. 6, pp. 1261-1269
[31] Watanabe, K., Ishiyama Y., and Ito, M., 1983, Modified Smith Predictor control for the multivariable systems with delays and unmeasurable step disturbances. International Journal of Control, vol. 37, no. 5, pp.959-973.
[32] Al-Sunni, F.M. and Al-Nemer, T.M, 1997, A Smith Predictor FL-based controller for processes with long dead time. International Journal of Control, vol. 28, no. 12, pp. 1251-1258.
[33] Majhi, S., and Atherton, D. P, 1999, Modified Smith predictor and controller for processes with time-delay. IEE Proceedings Control Theory and Applications, vol. 146, No. 5, pp. 359-366.
[34] Hagglund, T., 1996, An industrial dead-time compensating PI controller. Control Engineering Practice, vol. 4, no. 6, pp. 749-756.
[35] De Paor, A.M., 1985, A modified Smith predictor and controller for unstable processes with time delay. International Journal of Control, vol. 41, no. 4, pp. 1025-1036.
[36] Kwon, W. H., and Pearson, A. E., 1980, Feedback stabilization of linear systems with delayed control. IEEE Transactions on Automatic Control, vol. AC-75, no. 2, pp. 266-269.
[37] Artstein, Z., 1982, Linear systems with delayed controls: A reduction. IEEE Transactions on Automatic Control, vol. AC-27, no 4, pp.869-879.
[38] Moon, Y.S., Park, P.G., and Kwon, W.H., 2001, Robust stabilization of uncertain input-delayed systems using reduction method. Automatica, 37, pp. 307-312.
[39] Choi, H. H, and Chung, M. J., 1995, Memoryless stabilization of uncertain dynamic systems with time-varying delayed states and control. Automatica, 31, pp. 1349-1351.
[40] Kim, J.H., Jeung, E.T., and Park H.B., 1996, Robust control for parameter uncertain delay systems in state and control input. Automatica, vol. 32, no. 9, pp. 1337-1339.
[41] Su, H., Chu, J. and Wang, J., 1998, A memoryless robust stabilizing controller for a class of uncertain linear time-delay systems. International Journal of Systems Science, vol. 29, no. 2, pp.191-197.

Published by WSEAS Press
www.wseas.org
ISBN: 978-960-474-050-5
ISSN: 1790-5117

[42] Richard, J.P., 2003, Time-delay systems: an overview of some recent advances and open problems. Automatica, vol. 39, pp. 1667-1694.
[43] Fridman, E., and Shaked, U., 2003, Delay-dependent stability and H_∞ control: constant and time-varying delays, International Journal of Control, vol.76, no.1, pp.48-60.
[44] Jafarov, E. M., 2003, Delay-dependent stability and α-stability criterions for linear time-delay systems, WSEAS Transactions on Systems, iss.4, vol.2, pp.1138-1147.
[45] Niculescu, S. I., and Gu, K., 2004, Advances in Time-Delay Systems, Springer-Verlag, Berlin.
[46] Niculescu, S. I., 2001, Delay Effects on Stability, Springer-Verlag, London.
[47] Mahmoud, M. S., 2000, Robust Control and Filtering for Time-Delay Systems, Marcel Dekker, New York.
[48] Gu, K., Kharitonov, V. L., and Chen, J., 2003, Stability of Time-Delay Systems, Birkhauser, Boston.
[49] Boukas, E. K., and Liu, Z. K., 2002, Deterministic and Stochastic Time Delay Systems, Birkhauser, Boston.
[50] Kharitonov, V.L., and Niculescu, S.I, 2003, On the stability of linear systems with uncertain delay, IEEE Transactions on Automatic Control, vol. 18, no. 1, pp. 127-132.
[51] Zhang, X, Knospe, C.R., and Tsiotras, P, 2002, Stability analysis of LPV time-delayed systems, International Journal of Control, vol. 75, no. 7, pp. 538-558.
[52] Zhang, J, Knospe, C.R., and Tsiotras, P, 2003, New results for the analysis of linear systems with time-invariant delays, International Journal of Robust and Nonlinear Control, vol. 13, pp.1149-1175.
[53] Yu-Ping Tian, Hong-Yong Yang, 2004, Stability of internet congestion control with diverse delays, Automatica, In Press, Corrected Proof, Available online 11 May 2004, 9 pages.
[54] Xu, S., and Lam, J., 2005, Improved delay-dependent stability criteria for time-delay systems, IEEE Transactions on Automatic Control, vol.50, no.3, pp.384-387.
[55] Mahmoud, M. S., and Ismail, A., 2005, New results on delay-dependent control of time-delay systems, IEEE Transactions on Automatic Control, vol.50, no.1, pp.95-100.
[56] Rhodes, C., and Morari, M., 1996. Determining controllable sets from a time-delay description. IFAC World Congress, San Francisco, USA, pp. 13-18
[57] Chyung, D.H., 1970, Controllability of linear systems with multiple delays in control. IEEE Transactions on Automatic Control, AC-15, December, pp. 694-695.
[58] Thomas, G. B., Jr. And R. L. Finney, 1992, Calculus. Addison-Wesley Publishing Company, 8th Edition.
[59] Behrmant, A. F., 1964, Brief Course of Mathematical Analysis, Moscow, Nauka (in Russian).
[60] Ikeda, M., and Ashida, T., 1979, Stabilization of linear systems with time-varying delay. IEEE Transactions on Automatic Control, vol. AC-24, no.2, pp. 369-370.
[61] Su, H., and Chu, J., 1999, Robust H_∞ control for linear time-varying uncertain time-delay systems via dynamic output feedback, International Journal of Systems Science, vol.30, no.10, pp.1093-1107.
[62] Su., H., Ji, X., and Chu, J., 2005, New results of robust quadratically stabilizing control for uncertain linear time-delay systems, International Journal of Systems Science, vol.36, no.1, pp.27-37.
[63] Wu, M., He, Y., She, J. H., and Liu, G. P., 2004, Delay-dependent criteria for robust stability of time-varying delay systems, Elsevier, Automatica, vol.40, pp.1435-1439.
[64] Kim, J. H., 2001, Delay and its time-derivative dependent robust stability of time-delayed linear systems with uncertainty, IEEE Transactions on Automatic Control, vol.46, no.5, pp.789-792.
[65] Boyd, S., Ghaoui, L.E., Feron, E. and Balakishnan V., 1994, Linear Matrix Inequalities in System and Control Theory. Philadelphia, PA: SIAM.
[66] Fiagbedzi, Y.A., and Pearson, A.E.,1986, Feedback stabilization of linear autonomous time lag systems. IEEE Transactions on Automatic Control, AC-31, pp. 847-855.
[67] Moon, Y.S., Park, P., Kwon, W.H. and Lee, Y.S., 2001, Delay-dependent robust stabilization of uncertain state-delayed systems. International Journal of Control, vol. 74, no. 14, pp. 1447-1455.
[68] Smith, O.J.M, 1957, Closer control of loops with dead time. Chemical Engineering Progress, vol. 53, pp.217-219.
[69] Smith, O.J.M, 1958, Feedback Control Systems, New York: McGraw-Hill.

Published by WSEAS Press
www.wseas.org
ISBN: 978-960-474-050-5
ISSN: 1790-5117

[70] Marshall, J. E., 1974, Extensions of O. J. Smith's method to digital and other systems. International Journal of Control, vol. 19, no. 5 pp. 933-939.
[71] Aleviskas, G. and Seborg D.E., 1973, An extension of the Smith Predictor method to multivariable linear systems containing time delays. International Journal of Control vol. 3., no. 17, pp. 541-551
[72] Watanabe, K., and Ito, M., 1984, A process-model control for the linear systems with delay. IEEE Transactions on Automatic Control, vol. AC-26, no. 6, pp. 1261-1269
[73] Watanabe, K., and Ishiyama Y., and Ito, M., 1983, Modified Smith Predictor control for the multivariable systems with delays and unmeasurable step disturbances. International Journal of Control, vol. 37, no. 5, pp.959-973.
[74] Al-Sunni, F.M. and Al-Nemer, T.M, 1997, A Smith Predictor FL-based controller for processes with long dead time. International Journal of Control, vol. 28, no. 12, pp. 1251-1258.
[75] Majhi, S., and Atherton, D. P, 1999, Modified Smith predictor and controller for processes with time-delay. IEE Proceedings Control Theory and Applications, vol. 146, No. 5, pp. 359-366.
[76] Kwon, W. H., and Pearson, A. E., 1980, Feedback stabilization of linear systems with delayed control. IEEE Transactions on Automatic Control, vol. AC-75, no. 2, pp. 266-269.
[77] Wang., J. D., Lee, T.L., and Juang, Y.T., 1996, New methods to design an integral variable structure controller. IEEE Transactions on Automatic Control, vol. 41, No 1, pp. 140-143.
[78] Lee, J.J., and Xu, Y., 1994, A new method of switching surface design for multivariable structure systems. IEEE Transactions on Automatic Control, vol. 39, No 2, pp. 414-419.
[79] Cao, W.J., and Xu, J. X., 2002, On functional approximation of the equivalent control using learning variable structure control. IEEE Transactions on Automatic Control, vol. 47, No 5, pp. 824-830.
[80] Cao, W.J., and Xu, J.X., 2004, Nonlinear integral type sliding surface for both matched and unmatched uncertain systems. IEEE Transactions on Automatic Control, vol. 49, no. 8, pp. 1355-1360.
[81] Choi, H.H., 2004, An analysis and design method for uncertain variable structure systems with bounded controllers. IEEE Transactions on Automatic Control, vol. 49, no. 4, pp. 602-607.
[82] Edwards, C., Spurgeon, S.K., and Hebden, R.G., 2003, On the design of sliding mode output feedback controllers. International Journal of Control, vol. 76, no. 9/10, pp. 893-905.
[83] Sabanovic, A., Fridman, L. M., and Spurgeon, S. (Editors), 2004, Variable Structure Systems: from Principles to Implementation, The IEE, London.
[84] Jafarov, E. M., and Tasaltin, R., 2000, Robust sliding-mode control for the uncertain MIMO aircraft model F-18, IEEE Transactions on Aerospace and Electronic Systems, vol.36, no.4, pp. 1127-1141.
[85] Jafarov, E. M, and Tasaltin, R., 2001, Design of robust autopilot-output integral sliding mode controllers for guided missile systems with parameter perturbations, Aircraft Engineering and Aerospace Technology: An International Journal, vol.73, no.1, pp. 16-25.
[86] Jafarov, E. M, Parlakci, M. N. A., and Istefanopulos, Y., 2005, A new variable structure PID-controller design for robot manipulators, IEEE Transactions on Control Systems Technology, vol.13, no.1, pp.122-130.
[87] Yeh, F. K., Chien, H. H., and Fu, L. C., 2003, Design of optimal midcourse guidance sliding-mode control for missiles with TVC, IEEE Transactions on Aerospace and Electronic Systems, vol. 39, no.3, pp.824-837.
[88] Singh, S. N., Steinberg, M. L., and Page A. B., 2003, Nonlinear adaptive and sliding-mode flight path control of F/A-18 model, IEEE Transactions on Aerospace and Electronic Systems, vol.39, no.4, pp.1250-1262.
[89] Koshkouei, A. J., and Zinober, A. S. I., 2004, Sliding mode state observation for nonlinear systems, International Journal of Control, vol.77, no.2, pp.118-127.
[90] Shyu, K.K., and Yan, J.J., 1993, Robust stability of uncertain time-delay systems and its stabilization by variable structure control, International Journal of Control vol. 57, no. 1, pp. 237-246.
[91] Yan, J.J., 2003, Sliding mode control design for uncertain time-delay systems subjected to a class of nonlinear inputs. International Journal of Robust and Nonlinear Control, vol. 13, pp. 519-532.

Published by WSEAS Press
www.wseas.org
ISBN: 978-960-474-050-5
ISSN: 1790-5117

[92] Luo, N., DE La Sen, N.L.M. and Rodellar, J., 1997, Robust stabilization of a class of uncertain time-delay systems in sliding mode. International Journal of Robust and Non-linear Control, no. 1, pp. 59-74.
[93] Gouaisbaut, F., Dambrine, M., and Richard, J.P., 2001, Robust control of delay systems: a sliding mode control design via LMI. Systems and Control Letters, vol. 46, pp. 219-230.
[94] Richard, J.P., 2003, Time-delay systems: an overview of some recent advances and open problems. Automatica, vol. 39, pp. 1667-1694.
[95] Perruquetti, W., and Barbot, J.P. (Eds), 2002, Sliding Mode Control in Engineering, Marcel Dekker, New York.
[96] Jafarov, E. M., 1998, State feedback sliding mode control for SISO systems with time-delay. Proceedings of 8th IFAC Symposium Large Scale Systems: Theory and Applications LSS'98, Rio Patras, July 15-17, Greece, pp. 195-200.
[97] Jafarov, E.M., 2003, Robust sliding mode control of multivariable time-delay systems. Systems Science Journal, vol. 29, no. 3, pp. 17-36.
[98] Li, X., and DeCarlo, R. A., 2003, Robust sliding mode control of uncertain time-delay systems, International Journal of Control, vol.76, no.13, pp.1296-1305.3
[99] Gouaisbaout, F., Blango, Y., and Richard, J. P., 2004, Robust sliding mode control of non-linear systems with delay: a design via polytopic formulation, International Journal of Control, vol.77, no.2, pp.206-215.
[100] Koshkouei, A. J., and Zinober, A. S., 1996, Sliding mode time-delay systems, Proceedings of the International Workshop of VSS, Tokyo, Japan, pp.97-101.
[101] Fridman, E., and Shaked, U., 2003, Delay-dependent stability and H_∞ control: constant and time-varying delays, International Journal of Control, vol.76, no.1, pp.48-60.
[102] Jafarov, E. M., 2003, Delay-dependent stability and α-stability criterions for linear time-delay systems, WSEAS Transactions on Systems, iss.4, vol.2, pp.1138-1147.
[103] Niculescu, S. I., and Gu, K., 2004, Advances in Time-Delay Systems, Springer-Verlag, Berlin.
[104] Niculescu, S. I., 2001, Delay Effects on Stability, Springer-Verlag, London.
[105] Mahmoud, M. S., 2000, Robust Control and Filtering for Time-Delay Systems, Marcel Dekker, New York.
[106] Gu, K., Kharitonov, V. L., and Chen, J., 2003, Stability of Time-Delay Systems, Birkhauser, Boston.
[107] Boukas, E. K., and Liu, Z. K., 2002, Deterministic and Stochastic Time Delay Systems, Birkhauser, Boston.
[108] Kharitonov, V.L., and Niculescu, S.I, 2003, On the stability of linear systems with uncertain delay, IEEE Transactions on Automatic Control, vol. 18, no. 1, pp. 127-132.
[109] Zhang, X, Knospe, C.R., and Tsiotras, P, 2002, Stability analysis of LPV time-delayed systems, International Journal of Control, vol. 75, no. 7, pp. 538-558.
[110] Zhang, J, Knospe, C.R., and Tsiotras, P, 2003, New results for the analysis of linear systems with time-invariant delays, International Journal of Robust and Nonlinear Control, vol. 13, pp.1149-1175.
[111] Yu-Ping Tian, Hong-Yong Yang, 2004, Stability of internet congestion control with diverse delays, Automatica, In Press, Corrected Proof, Available online 11 May 2004, 9 pages.
[112] Xu, S., and Lam, J., 2005, Improved delay-dependent stability criteria for time-delay systems, IEEE Transactions on Automatic Control, vol.50, no.3, pp.384-387.
[113] Mahmoud, M. S., and Ismail, A., 2005, New results on delay-dependent control of time-delay systems, IEEE Transactions on Automatic Control, vol.50, no.1, pp.95-100.
[114] Zhou, F., and Fisher, D. G., 1992, Continuous sliding mode control. International Journal of Control vol.55, no. 2, pp. 313-327.
[115] Shtessel, Y. B., and Buffington, J. M., 1998, Continuous sliding mode control. Proceedings of the 1998 American Control Conference, Adam's Mark Hotel, Philadelphia, Pennsylvania USA, June 24-26, vol. 1, pp. 562-563.
[116] Feng, Z., Mian, C., and Weibing G., 1993, Variable structure control of systems with delays in control. Journal of Control and Decision, vol. 8, no. 2, pp. 95-100 (in Chinese).
[117] Hu, K.J., Basker, V. R., and Crisalle, O. D., 1998, Sliding mode control of uncertain input-delay systems. Proceedings of the 1998 American Control Conference, Adam's Mark Hotel, Philadelphia, Pennsylvania USA, June 24-26, vol. 1, pp. 564-568.

Published by WSEAS Press
www.wseas.org
ISBN: 978-960-474-050-5
ISSN: 1790-5117

[118] Boid, S., Ghaoui, L. E., Feron, E., and V. Balakrishnan, 1994, Linear Matrix Inequalities in System and Control Theory. Philadelphia PA: SIAM.
[119] Ackermann, J., and Utkin, V., 1998, Sliding mode control design based on Ackermann's formula. IEEE Transactions on Automatic Control, vol. 43, no.2, pp. 234-237.
[120] Thomas, G. B., Jr. And R. L. Finney, 1992, Calculus. Addison-Wesley Publishing Company, 8th Edition.
[121] Behrmant, A. F., 1964, Brief Course of Mathematical Analysis, Moscow, Nauka (in Russian).
[122] Ikeda, M., and Ashida, T., 1979, Stabilization of linear systems with time-varying delay. IEEE Transactions on Automatic Control, vol. AC-24, no.2, pp. 369-370.
[123] Su, H., and Chu, J., 1999, Robust H_∞ control for linear time-varying uncertain time-delay systems via dynamic output feedback, International Journal of Systems Science, vol.30, no.10, pp.1093-1107.
[124] Su., H., Ji, X., and Chu, J., 2005, New results of robust quadratically stabilizing control for uncertain linear time-delay systems, International Journal of Systems Science, vol.36, no.1, pp.27-37.
[125] Wu, M., He, Y., She, J. H., and Liu, G. P., 2004, Delay-dependent criteria for robust stability of time-varying delay systems, Elsevier, Automatica, vol.40, pp.1435-1439.
[126] Kim, J. H., 2001, Delay and its time-derivative dependent robust stability of time-delayed linear systems with uncertainty, IEEE Transactions on Automatic Control, vol.46, no.5, pp.789-792.
[127] Franklin, G.F., Powell, J.D., and Emami-Naeini, A., 2002, Feedback Control of Dynamic Systems, 4th Ed., New Jersey: Prentice Hall.
[182] Blakelock, J.H., 1991, Automatic Control of Aircraft and Missiles. 2nd Ed., New York: John Wiley.
[183] Kwon, W. H. and Pearson, A. E. (1980). Feedback stabilization of linear systems with delayed control. IEEE Transactions on Automatic Control, vol. 25, no. 2, pp.266-269.
[184] Moon, Y. S., Park, P. G. and Kwon W. H. (2001). Robust stabilization of uncertain input-delayed systems using reduction method. Automatica, vol. 37. pp. 307-312.
[185] Krasovskii, N.N. (1963). Stability of Motion, Stanford University Press.
[186] Niculescu, S.I. (1998). H_∞ memoryless control with an α-stability constraint for time-delay systems: An LMI approach. IEEE Transactions on Automatic Control, vol. 43, no. 5, pp. 739-743.
[187] Niculescu, S.I., Verriest, E.I., Dugard, L. and Dion, J.M. (1998). Stability and robust stability of time-delay systems: A guided tour, In Stability and Control of Time-delay systems (Eds). L. Dugard and E.I. Verriest, London: Springer-Verlag, pp. 1-71.
[188] Choi, H. H. and Chung, M. J. (1995). Memoryless stabilization of uncertain dynamic systems with time-varying delayed state and control, Automatica, vol.31, pp. 1349-1351.
[189] Kim, J. H., Jeang, E.T. and Park, H. B. (1996), Robust control for parameter uncertain delay system in state and control input. Automatica, vol.32, no. 9, pp. 1337-1339.
[190] Su, H., Chu, J. and Wang, J. (1998). A memoryless robust stabilizing controller for a class of uncertain linear time-delay systems. International Journal of Systems Science, vol. 29, no. 2, pp. 191-197.
[191] Mahmoud, M.S., and Al-Muthairi, N.F. (1994). Design of robust controllers for time-delay systems. IEEE Transactions on Automatic Control, vol. 30, no. 5, pp. 995-999.
[192] Richard , J.-P. (2003). Time-delay systems: an overview of some recent advances and open problems. Automatica, vol. 39, pp. 1667-1694.
[193] Jafarov E.M. (2003). Delay-dependent stability and $\propto$-stability criterions for linear time-delay systems. WSEAS Transactions on Systems, Issue 4, vol. 2, pp 1138-1147.
[194] Noldus, E. (1985). Stabilization of a class of distributional convolution equations. International Journal of Control, vol. 41, no. 4, pp. 947-960.
[195] Vidyasagar, M. (1978). Nonlinear Systems Analysis, Printice-Hall, New Jersey.
[196] Cheres, E., Palmor, Z. J. and Gutman, S. (1990), Min-max predictor control for uncertain systems with input delays. IEEE Transitions on Automatic Control, vol.35, no. 2, pp. 210-214.

Published by WSEAS Press
www.wseas.org
ISBN: 978-960-474-050-5
ISSN: 1790-5117

978-960-474-050-5