Low Temperature Deposition SiO_2 Films by SAPCVD

H. Juárez[1], T. Díaz[1], M. Pacio[2], E. Rosendo[1], G. García Salgado[1], M. Rubin[3], G. Romero[2], A. García[2], C. Morales[2], and F.Mora[1].
[1]Centro de Investigación en Dispositivos Semiconductores
Universidad Autónoma de Puebla
14 Sur and Av. San Claudio, San Manuel 72000, Puebla
MEXICO
[2]Ingeniería Eléctrica, Sección Electrónica del Estado Sólido
Centro de Investigación y de Estudios Avanzados del I. P. N.
Av. Instituto Politécnico Nacional 2508, San Pedro Zacatenco, 07360 México, D. F.
MEXICO
[3]Facultad Ciencias de la Computación,
Benemérita Universidad Autónoma de Puebla,
14 Sur and Av. San Claudio, San Manuel 72000, Puebla
MEXICO

Abstract: - A Subatmospheric Pressure Chemical Vapor Deposition (SAPCVD) system was implemented for SiO_2 nanometric films deposition on silicon substrates. Tetraethoxysilane (TEOS) and ozone (O_3) were used as precursors and they were mixed into the SAPCVD system at 590 Torr. The deposition temperatures ranged from 140 to 265°C and the deposition time ranged from 1 to 15 min. The measured thicknesses from the deposited SiO_2 films were between 5 and 300 nm. The thin films were also characterized by FTIR spectroscopy. From the FTIR spectra the typical absorption bands of the Si-O bond were observed (asymmetric stretching, bending and rocking) and it was also observed a dependence on the vibrational modes corresponding to hydroxyl groups with the deposition temperature. Furthermore an analytical model has been evoked to determine the activation energy of the reactions in the deposit films process.

Key-Words: - SAPCVD; TEOS, Ozone, SiO_2, Deposition rate, Low temperature.

1 Introduction

Interlayer dielectric film formation technology is essential for multilevel interconnection in ULSI devices. Low temperature deposition has been required. Organosilicon materials such as tetraethoxysilane (TEOS), $Si[OCH_2CH_3]_4$ have increasingly been used as a silicon source because it provides a better film quality and excellent step coverage compared to the conventional silane method [1]. Desirable aspects of TEOS as a silicon source are safety, easy of handling, and chemical stability. However, conventional thermal CVD TEOS processes require high temperatures which exclude their application in forming dielectric layer in multilevel metal structures. Recent works have shown that reactive TEOS/Ozone chemistries for oxide films fulfill the low thermal budget requirements of ULSI multilevel metal processing retain many of the desirable properties of other TEOS-based processes and exhibit self-planarizing characteristics superior to all other oxide deposition processes. The CVD reaction of TEOS with ozone yields silicon dioxide thin films with excellent planar fill characteristics at unusually low process temperatures (300ºC to 400ºC) [2-6]. However, its deposition mechanism is not well understood yet. The chemistry of this process has not been definitively characterized yet and the process therefore presents an excellent opportunity to evaluate our approaches. Additionally, the data obtained in characterization of the process has immediate relevance for device manufactures.

Two critical issues in TEOS/Ozone processing could impede its implementation in ULSI fabrication schemes. Firstly, unless the process is carried out at the high end of its temperature "window" (400ºC), the as-deposited films tend to be hygroscopic with significant residual Si-OH

and water. Depending upon the quality of metal under the oxide, this temperature process may be at the limit of acceptable condition and may cause defects in the conductor lines where metal of marginal quality exists. Films annealing to remove the residual water and hydroxyl groups moieties negates the advantages of low thermal budget. Secondly, the TEOS/Ozone process tends to exhibit a narrow window for low particulate processing with small process upsets leading to unacceptable particle levels. This latter problem correlates with the need for higher temperature processing since parasitic reactions resulting in reduced deposition rates and leading to gas phase particle growth are accelerated at increased temperatures [7].

In this work, SiO_2 films by SAPCVD using TEOS and ozone were deposited at low temperature on silicon substrates and their optical properties were investigated. An analytical model for the deposition rate was used to obtain the activation energy of the reaction at the film surface and in gas phase.

2 Experimental Procedure

A schematic draw of the SAPCVD system is shown in figure 1 [8]. The reactor is composed by a graphite heater element into a closed quartz chamber. The deposition temperature is controlled by a k type thermocouple and a temperature controller (Eurotherm model 2416). TEOS is introduced into the reactor by flowing N_2 through a bubbler containing the precursor at 25°C. Also an O_3/O_2 flow was introduced into the reactor. The partial pressure of the TEOS was 1.1 Torr and the ozone concentration in the oxygen was controlled to be 5%.

The SiO_2 films were deposited on n-type (100) silicon substrates of 5 Ω-cm at a pressure of 590 Torr. Prior to the deposit process, the substrates were cleaned by a standard process (RCA) to eliminate organic and inorganic moistures on their surface and the silicon wafer were introduced into the reactor, on the heater, and a pressure of 590 Torr was set into the chamber. After the temperature on the substrate was stabilized the TEOS and Ozone was flowed into the chamber. The oxide films were deposited at temperatures from 140 to 265°C having deposition time between 1 min and 15 min. The final film thicknesses were from 6 to 300 nm as measured from a Rudolph 439L633P ellipsometer.

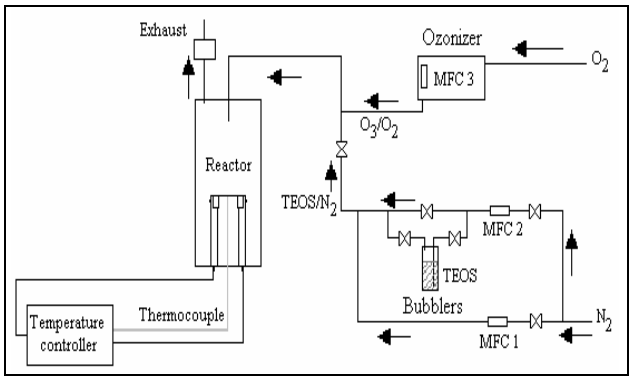

Fig. 1. Schematic diagram of the SAPCVD system.

The films were etched in a chemical solution, composed by 15:10:300 of HF (48%): HNO_3 (70%): DI water, in volume, to determine the etch rate in the films. Film microstructure was examined by a FTIR Bruker vector 22 system.

3 Results and Discussion

The main absorbance peaks expected from SiO_2 films from an infrared spectroscopy are rocking (450 cm^{-1}), bending (800 cm^{-1}) and asymmetric stretching (1072 cm^{-1}) originated from the vibration modes of Si-O bonds. In the figure 2 a serie of absorbance spectrum are presented for SiO_2 films obtained at different temperatures and from where those main peaks are observable. Also, in some cases, additional bands corresponding to hydroxyl groups (920, 3380-3650 cm^{-1}) and other residual groups (ethoxy groups and CO_2 at 1395-1837 and 2300 cm^{-1} respectively) are exhibited.

When the deposition temperature was increased from 140 to 265°C the intensity of those absorption bands decreased, this means that the quantity of residual groups incorporated in the film decreases [9]. This could signify that the film porosity is decremented principally as a consequence of the reduction in the number of the hydroxyl groups [10]. The gradual reduction in the intensity of the bands corresponding to the hydroxyl groups with the increase in the

deposition temperature is consistent with the raise in the value of the film density determined by a decrease on the etch rate of the film (table 1). The higher etch rate found in the films deposited at lower temperature shown a decrease in the film density. It is known a decrease in the Si-OH bonds in the film resulted in a more dense silicon oxide film [10, 11].

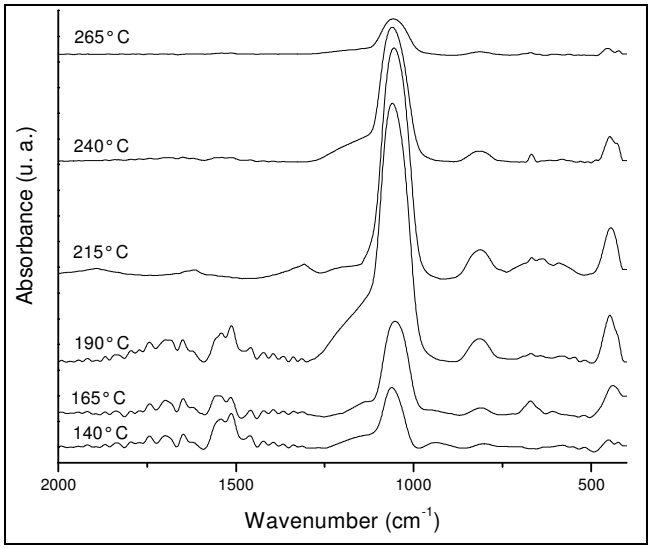

Fig. 2. Absorbance spectra for SiO_2 films obtained by SAPCVD at different temperatures and 10 min of deposition. The flow of N_2 and O_2were 1.0 and 0.5 slm respectively.

The refractive index has been reported to be inversely proportional both to etch rate and the number of hydroxyl groups in the film [10, 11, 12]. Hence, the silicon oxide films obtained at low temperatures with high number of Si-OH bonds lead to low values for the refraction index. The refraction index of the as-deposited silicon oxide films increased from 1.400 to 1.461, as the deposition temperature rise from 140 to 265°C.
On the other hand, was found that the film deposition rate was dependent on the deposition temperature. From Table 1 can be observed that the minimum value for this parameter is found at 140°C. For higher temperatures it reaches a maximum and after it decreases. To explain this behavior the model of Kim and Gill [13] was taken.

Kim and coworkers [13] proposed a kinetic mechanism for TEOS-Ozone to explain the deposition rate of SiO_2 films in CVD processes. They assumed with Benson and Axworthy [14] that ozone decomposes into oxygen atoms and molecules when colliding with other species in the gas phase. Furthermore, they postulate that TEOS decomposes to an intermediate, I, in the gas phase when reacting with ozone molecules and/or oxygen atoms. Some of the intermediate molecules decompose to useless products in the gas phase before they reach the wafer surface. Undecomposed intermediate molecules are adsorbed on the wafer surface according to the Langmuir-Hinshelwood mechanism, and then they decompose to produce SiO_2 films.

Table 1. SiO_2 films TEOS-Ozone parameters.

Deposition temperature [ºC]	Deposition rate [nm/min.]	Refraction index	Etch rate [nm/sec]
140	5	1.400	1.73
165	12	1.445	1.46
190	20	1.452	1.17
215	19	1.457	0.84
240	16	1.460	0.71
265	9	1.461	0.66

The kinetic mechanism includes parasitic gas phase reactions. Thus, the deposition rate is given by [13]

$$R_{SiO_2} = k_S \frac{Q_{in}[O_3]_{in}}{V} \frac{[TEOS]_{in}}{1 + k_G[O_3]_{in}}, \qquad (1)$$

where Q_{in} is the volumetric flow rate, $[O_3]_{in}$ and $[TEOS]_{in}$ are the concentration of ozone and TEOS at the reactor input respectively, V is the reactor volume and k_S, k_G are the reaction rate constant in the surface and in gas phase respectively.

The eq. (1) contains the surface reaction (numerator) and the gas phase reactions (denominator). For our SAPCVD system the values for Q_{in}, $[O_3]_{in}$ and $[TEOS]_{in}$ were

$[TEOS]_{in} = 1.2\text{x}10^{-6}$ mol cm^{-3}

$[O_3]_{in} = 1.5\text{x}10^{-5}$ mol cm^{-3}

$Q_{in} = 26.6$ cm^3/s

$V = 1021.4$ cm^3

Substituting those values en eq. (1), it is found;

$$R_{SiO_2} = \frac{4.69x10^{-13} k_S}{1 + k_G \quad 1.5x10^{-5}}, \qquad (2)$$

where k_S y k_G have the form [8]

$$k \;\; \alpha \;\; e^{-\frac{B}{RT}}, \qquad (3)$$

here, T is the temperature, R is the Boltzmann constant and B is the activation energy of the reaction.

Taking into account just the reactions in the surface, the second term in the denominator of eq. (2) can be neglected and it becomes,

$$R_{SiO_2} = 4.69x10^{-13} k_S \qquad (4)$$

If the experimental values of the deposition rate from table 1 vs. the inverse of the deposition temperature are plotted; it is possible to obtain the value of the activation energy for the reactions in gas phase and on the surface. In figure 3 such characteristic is presented.

In that figure, it is observed that in the temperature range 140 to 190ºC, a straight line is obtained according to the eq. (4), signifying that the deposition rate is increased with the increase in the deposition temperature because the value of the k_S in eq. (3) increases with temperature.

After reach a maximum a decrease in the deposition rate can be observed around 215°C. This fact can be explained by the effects in gas phase reactions. At high temperatures, where the gas phase reactions are significant the second term in the denominator of eq. (2) becomes important and therefore the theoretical deposition rate must be decrease. The deposition rate of the TEOS–Ozone process is limited by parasitic reactions in the gas phase and this cause the decrease in the deposition rate. This behavior has been also found in systems LPCVD to 30 Torr, where the maximum is located around of 400°C [7, 13, 15].

Using the experimental values of the deposition rate and numeric analysis with regard to eq. (2), the values of k_S and k_G and therefore the activation energy in the surface and in gas phase were obtained. These values were 8744.0 and 27925.9 cal/mol respectively. Substituting the values in eq. (1) it becomes;

$$R_{SiO_2} = \frac{4.75x10^{-4} \quad e^{-\frac{8744}{RT}}}{1 + 4.5x10^{12} \quad e^{-\frac{27925.9}{RT}}}. \qquad (5)$$

A plot of eq. (5) is shown in figure 3. It can be seen that the experimental data fits well with the theoretical ones calculated from eq. (5). A little difference observed around the maximum of the deposition rate in figure 3 can be due to a change in the predominant reactions, that is, the dominant processes are initially the reactions in the surface and later the dominant processes changes and it leads to reactions in gas phase to be dominant [8]

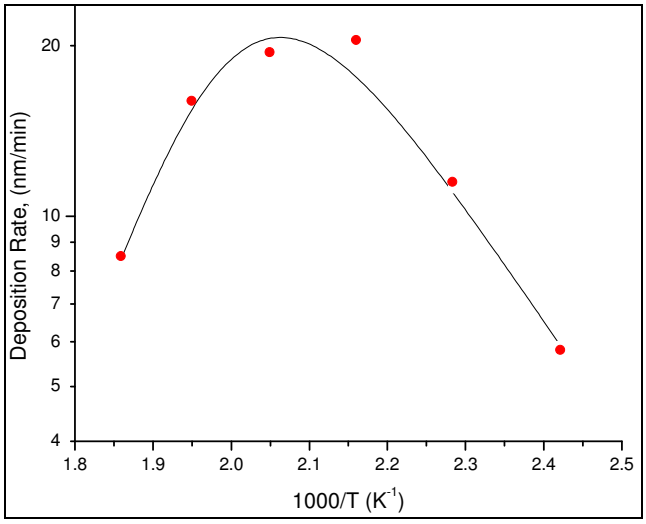

Fig. 3. Deposition rate vs. inverse of the temperature for experimental values (points) and theoretical values (continuous line) from eq. (5).

4 Conclusions

A SAPCVD system was implemented to deposit SiO_2 films on Silicon substrates. The deposition temperatures ranged from 140 to 265°C, temperatures range not reported in SAPCVD systems. The film thickness ranged from 5 to 300 nm. The absorbance spectra from the deposited films were obtained. The absorption bands corresponding to the vibration modes of the SiO_2 were observed. It was also observed additional absorption bands belonging to hydroxyl groups

(Si-OH bonds). It could be observed from those spectra that the composition of the silicon dioxide films changes with the film deposition temperature. Increasing the temperature, from 140 to 240°C the quantity of hydroxyl groups incorporated in the film reduces. These produce a change in the value of the refraction index film and as consequence a decrease in the film porosity. A theoretical model was fed with parameters calculated from our SAPCVD system to determine the activation energy of the reactions in gas phase and on the surface. The experimental data for the film deposited rate fitted well with the ones found from that theoretical model.

References:

[1] X1. J. Schlote, E. Bugiel, J. Arndt and G. Wahl, *Journal Electrochemical Society*, Vol.146, No.9, 1999, pp. 3415-3419.

[2] X2. K. Fujino, Y. Nishimoto, N. Tokumasu and K. Maeda, *Journal Electrochemical Society*, Vol.140, 1993, pp. 2922.

[3] X3. A. Kubo, T. Homma and Y. Murao, *Journal Electrochemical Society*, Vol.143, No.5, 1996, pp. 1769-1773.

[4] X4. E. Jung, W.N. Gill, *Journal of Crystal Growth* Vol.140 1994 pp. 308-314.

[5] X5. T. Homma, R. Yamaguchi, Y. Murao, *Journal Electrochemical Society*, Vol.140, No.3, 1993, pp. 687-692.

[6] X6. S. Romet, M. F. Couturier and T. K. Whidden, *Journal Electrochemical Society*, Vol.148, No.2, 2001, pp. G82-G90

[7] X7. I. A. Shareef, G. W. Rubloff and W. N. Gill, *Journal of Vacuum Science & Technology B: Microelectronics and Nanometer Structures*, Vol.14, No.2, 1996, pp. 772-788.

[8] X8. M. Pacio, M. D. thesis, CIDS-ICUAP, University of Puebla, Puebla, México, 2004.

[9] X9. A. C. Adams, *Solid State Technology,* Vol.26, 1983, 135-.

[10] X10. B. Fowler and E. O´Brien, *Journal of Vacuum Science & Technology B: Microelectronics and Nanometer Structures*, Vol.14, No.2, 1996, pp. 772-788.

[11] X11. A. Brunet and J. Rivory, *Journal Applied Physics*, Vol.83, No.3, 1997 1330

[12] X12. T. V. Herak, T. T. Chau, D. J. Thomson, S. R. Mejia, D. A. Buchanan and K. C. Kao, *Journal Applied Physics*, Vol.65, No.6, 1989, 2457-2463.

[13] X13. E. Jung, W. Gill, *Journal Crystal Growth*, Vol.140, 1994, 315-326.

[14] X14. S. W. Benson and A. E. Axworthy, *Journal of Chemical Physics*, Vol.26, No.6, 1957, pp. 1718-1726

[15] X15. Y. Ikeda, Y. Namasawa and M. Sakamoto, Journal Electronics Materials, Vol.19, 1990, pp. 45.