Analysis of Sensorless Controlled One Phase Brushless DC Motor

ABDEL-KARIM DAUD
Electrical and Computer Engineering Department
Palestine Polytechnic University (PPU)
P.O. Box 198 Hebron, Tel:+972-2-2228912, Fax:+972-2-2217248
PALESTINE

Abstract: - Using neodymium-iron-boron (Nd-Fe-B) magnets, a brushless dc motor (BLDCM) with only one air-gap winding and special form of rectangular PM-rotor is realized. Rectangular PMs are glued on the rotor in order to reduce cost. For the electronic circuit only one switch is necessary. Therefore, the cost of this drive is reduced to one third. Sensorless techniques are becoming more attractive for drives, since they can result in less expensive and more robust system. Especially in BDCM drives, where the rotor position is fundamental to derive the proper switching sequences, this is a very interesting issue. Therefore, a sensorless strategy, which is based on extracting information from the back-emf, is used. The calculation of the air-gap flux density is obtained by using a 2DFEM program. Flux lines distribution in the electromagnetic parts of this motor is obtained also for different rotor position. Then the obtained results of the magnetic flux density are decomposed in harmonic spectrum by means of Fast Fourier Transforms (FFT). The motor parameters and characteristics are also determined by using FFT. Motor characteristics are calculated and measured for a wide range of parameters such as supply voltage and current flow angles. The measured results show good agreement with theoretical results.

Key-Words: - BLDCM, permanent magnets, 2DFEM, sensorless control, FFT

1 Introduction

Permanent-magnet excited brushless dc motors (BLDCM) are becoming increasingly attractive in many applications due to their performance advantages such as reduced size and weight, high efficiency, low noise and maintenance, improved reliability and very good control characteristics in a wide speed range [5,6,8]. The interest in the brushless dc drives has also consequently increased with the development of microelectronic and power electronics [7,8].

The most popular brushless DC motors have three-phase windings [2,3] or four-phase windings [4], which are controlled and driven by full bridge transistor circuit.

From these classical type of brushless dc motor with three or four windings, it became clear that the electronic circuit is still expensive so that this type of motor could not be used in consumer applications.

In this paper, a brushless DC motor with only one air gap winding and special form of PM-rotor is investigated. The principle of operation of this type of brushless DC motor is explained in [1]. For the electronic circuit only one power switch is necessary. Therefore, the cost of such a drive is reduced to one third.

Elimination of position and velocity transducers in dc drives is desirable for a number of reasons. The shaft transducers themselves and perhaps even more the associated wiring, are a significant source of failure and cost. However, for a good performance of the PM dc motor, the rotor position has to be known with high accuracy. Much effort, reflected in the numerous papers dealing with this issue, has been made in research to avoid use of a position sensor in dc drives [9,10,11]. In this paper, the detection of back-emf technique is used.

Due to the complex arrangement of PM-rotor as shown in Fig.1, the air gap flux density is obtained by using a 2DFEM program. By using the method of FFT, the different motor parameters and characteristics are determined.

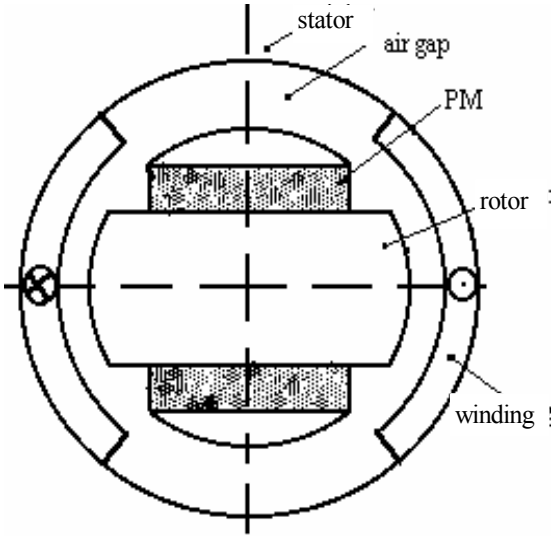

Fig.1: Cross section of a two pole single phase brushless DC motor

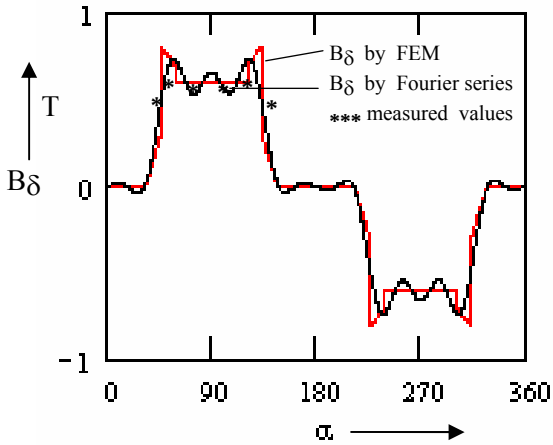

Fig.3: Fourier representation with ν=12 and the original function of Bδ comparing with measured values

2 Air Gap Flux Density

The flux density distribution in the air gap Bδ, which values were obtained from a 2DFEM program, is illustrated in Fig.2. The Fourier series for this curve, is displayed for the harmonic ν=12 in Fig.3. It is clear, by increasing the number of Fourier coefficient, the flux density $B_\delta = f(\alpha)$ comes closely to the origin function. Theoretically when $\nu = \infty$, man obtained exactly the original function.

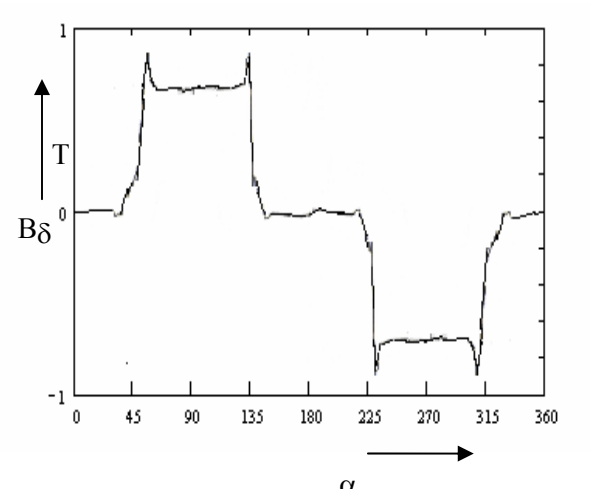

Fig.2: Air gap flux density of the motor $B\delta=f(\alpha)$

3 System Model

The drive circuit configuration of brushless dc motor with one winding is shown in Fig.4. According to the principle of this motor, the winding is current carrying only during $\pi \le \alpha \le 2\pi$, in which the induced voltage is positive as shown in Fig.5. Therefore, the transistor switches on only during a period less than 180°, which is called a current flow angle δo and given by

$$\delta o = \alpha_2 - \alpha_1 \qquad (1)$$

where α_1 and α_2 are switch-on and -off angles respectively. The curve of transistor voltage is represented in Fig.6.

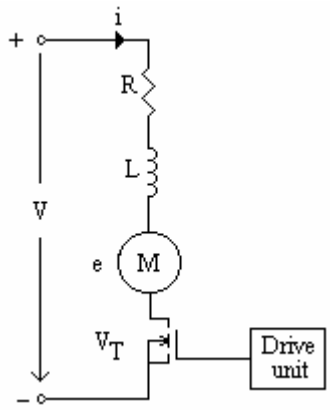

Fig.4: Drive circuit configuration of the motor

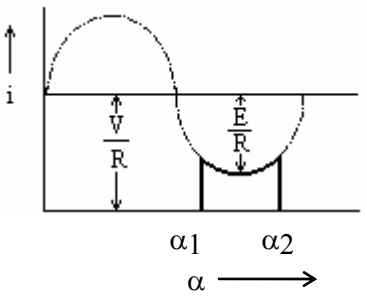

Fig.5: Phase current as function of rotor position for $L \rightarrow 0$

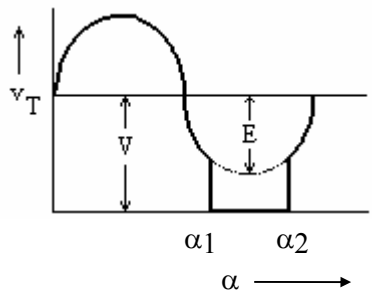

Fig.6: Transistor voltage as function of rotor position for $L \rightarrow 0$

4 Equivalent Circuit

An equivalent circuit, for one winding brushless dc motor, can be derived from the system model outlined so far. By inspection of Fig.4:

$$V = e + R\,i + L\frac{di}{dt} + V_T \quad \text{for } \alpha_1 \le \alpha \le \alpha_2 \qquad (2)$$

$$V = e + V_T \quad \text{for otherwise } \alpha \qquad (3)$$

With

$$\alpha = \omega t \quad \text{and} \quad \frac{d}{dt} = \omega\frac{d}{d\alpha}\ , \qquad (4)$$

the governing equations can be arranged into the following form:

$$Ri(\alpha)+\omega L\frac{di}{d\alpha} = V - e(\alpha) - V_T(\alpha) \quad \text{for } \alpha_1 \le \alpha \le \alpha_2 \qquad (5)$$

$$0 = V - e(\alpha) - V_T(\alpha) \quad \text{for otherwise } \alpha \qquad (6)$$

5 Voltages and Currents

The harmonic spectrum of the magnetic flux density in Fig.3 can be obtained by applying the method of FFT, which results are shown in Fig.7.

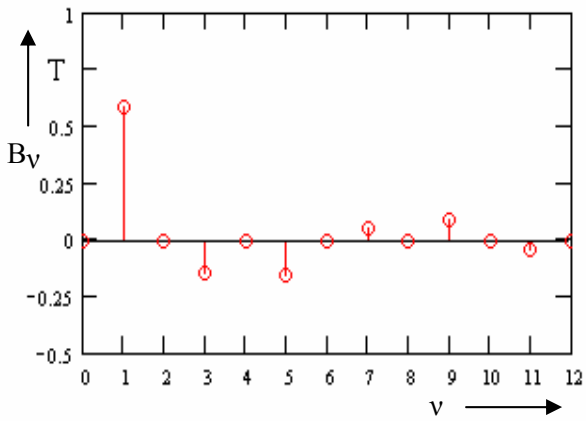

Fig.7: Harmonic spectrum of the flux density in the air gap B_ν

Therefore the induced voltages can be written as

$$e = \sum_{\nu\ odd} E_\nu \sin[\nu\,\alpha] \qquad (7)$$

where

$$E_\nu = C_m\,\omega\,B_\nu \qquad (8)$$

With the initial condition $i(\alpha_1) = 0$ and assuming that the power switch is to be ideal, the solution of eq.(5) is given by:

$$i(\alpha) = I_o + \sum_{\nu\ odd} I_\nu f_{1\nu}\{\sin(\nu\alpha-\varphi_\nu) - f_{2\nu}K_1(\alpha)\} \qquad (9)$$

where

$$K_1(\alpha) = e^{-(\alpha-\alpha_1)/\omega\tau}\ ;\ \tau = L/R\ ;$$

$$I_o = (V/R)\,(1 - K_1(\alpha))\ ;\ I_\nu = E_\nu / R\ ; \qquad (10)$$

$$f_{1\nu} = \frac{1}{\sqrt{1+(\nu\omega\tau)^2}}\ ;\ f_{2\nu} = \sin(\nu\alpha_1-\varphi_\nu);$$

and φ_ν is the phase difference between the induced emf and the phase current for νth harmonic

$$\varphi_\nu = \tan^{-1}(\nu\omega\tau) \qquad (11)$$

The average value of the armature current can be calculated over the period (0, 2π) and is given by:

$$I_{ave} = \frac{1}{2\pi}\int_{\alpha_1}^{\alpha_2} i(\alpha)\ d\alpha$$

$$= \frac{1}{2\pi}\{\, I_{sc}\,(\delta o + \omega\tau\, K_\delta\,) + \sum_{\nu odd} I_\nu\, f_{1\nu} * \{(1/\nu)\,[\cos(\nu\alpha_2-\varphi_\nu) + - \cos(\nu\alpha_1-\varphi_\nu)] - f_{2\nu}\omega\tau\, K_\delta\,\}\} \qquad (12)$$

where

$\delta o = \alpha_2 - \alpha_1$; $I_{sc} = V/R$;

$$K_\delta = \exp(-\delta o/\omega\tau) - 1 \qquad (13)$$

6 Torque

The gross electromagnetic torque is given by

$$T = \frac{1}{\omega} e\, i \qquad (14)$$

Taking into account eqs. (7) and (9), the instantaneous torque of the motor is

$$T = \frac{1}{\omega} \{ \sum_{\nu odd} f_{o\nu} (1 - K_1(\alpha)) \sin(\nu\alpha) + - \sum_{\nu odd} \sum_{\mu odd} \{ f_{1\nu\mu} [\cos[(\nu-\mu)\alpha + \varphi_\mu] + - \cos[(\nu+\mu)\alpha - \varphi_\mu]] + - f_{2\nu\mu} K_1(\alpha) \sin(\nu\alpha) \} \qquad (15)$$

where

$$f_{o\nu} = E_\nu V/R ,$$

$$f_{1\nu\mu} = E_\nu I_\mu/2; \; f_{2\nu\mu} = E_\nu I_\mu \sin(\mu\alpha_1 - \varphi_\mu), \qquad (16)$$

$$I_\mu = \frac{E_\nu}{R} \cdot \frac{1}{\sqrt{1+(\mu\omega\tau)^2}} ;$$

whilst the average torque can be also calculated over the period (0 , 2π) during the current flow angle δo.

7 Results

The previous described method has been applied to a two pole brushless DC motor with only one air gap winding. The main design parameters are given in Table 1. The special feature of this single phase brushless DC motor is, that no rotor position sensors, such as Hall probes or magnetoresistive sensors, are used. For detection of rotor position the induced voltage is used in combination with an electronic circuit. In the early start-up phase the motor operates as a stepping motor due to external pulse train.

Fig.3 shows the simulated and measured values of the air gap flux density. The magnetic flux distribution in the electromagnetic parts of the motor for different rotor position and armature current as obtained on the basis of the FEM is shown in Figs. 8 and 9. From Fig.9, it is clear due to air gap winding, the influence of the armature field on the main field is very low. Therefore, the armature reaction can be neglected.

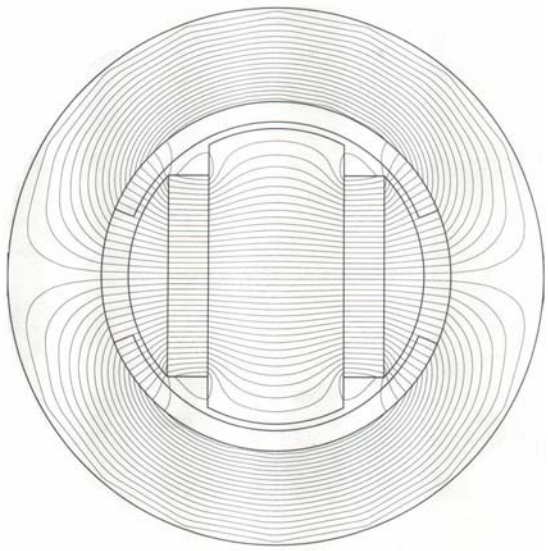

Fig.8: Magnetic flux distribution in the air gap for I=0A and α=0°.

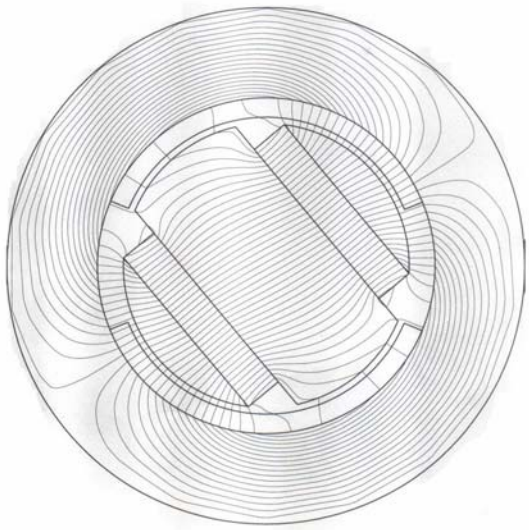

Fig.9: Magnetic flux distribution in the air gap for I=4A and α=220°.

The instantaneous phase current show Figs.10 and 11, where the current harmonic consists a high order ripples with small magnitude as shown in Figs.12

and 13 for different speeds. The results obtained for the instantaneous torque (Figs.14 and 15) show that the influence of the inductance is increased with the speed. For different supply voltages V and current flow angles δo, the calculated and measured steady state characteristics (speed - torque characteristics) of the motor are represented in Figs.17 and 18. It can be taken that the current flow angle will have an influence on the average current and the torque. The calculation results are in good agreement with test results.

8 Conclusion

A brushless DC motor with only one winding is described in this paper. This motor type has an air gap winding and special form of Nd-Fe-B PM-rotor. By applying the method of Fast Fourier transforms (FFT), the calculated results of the magnetic flux density obtained on the basis of the FEM are decomposed in harmonic spectrum. The influence of current and torque harmonics is studied. Motor characteristics are measured and calculated for a wide range of parameters. The measured results show good agreement with the theoretical results.

Item	Dimension
no. of windings	58
angle of the winding	135°
winding resistance	R = 0.4 Ω
self-inductance	L = 0.6mH
pole number	2p=2
PM:	
length	30 mm
width	30 mm
height	6 mm
material	NdFeB

Table 1: Design data of BLDCM

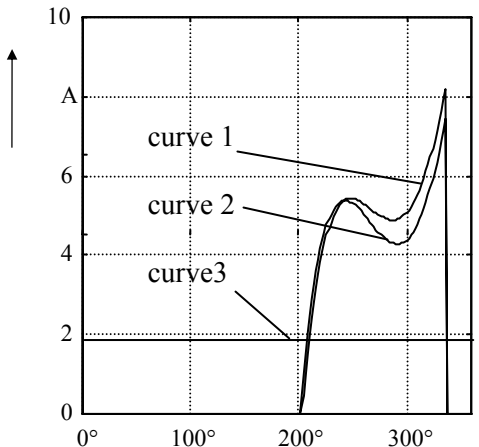

Fig.10: Phase current of the motor at n=6000 rpm and δo = 135°.
curve 1: calculated using one Fourier coefficient
curve 2: calculated using five Fourier coefficient
curve 3: average value

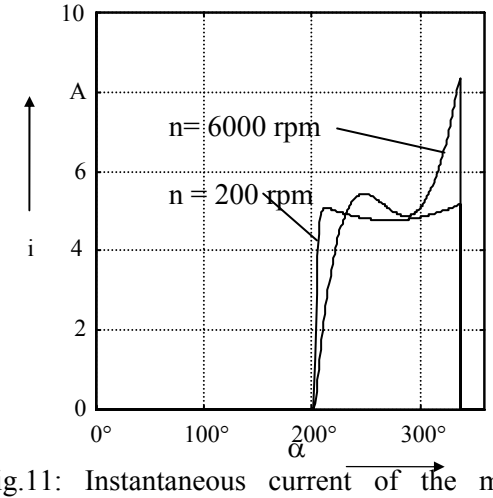

Fig.11: Instantaneous current of the motor for δo=135° and the same average value.

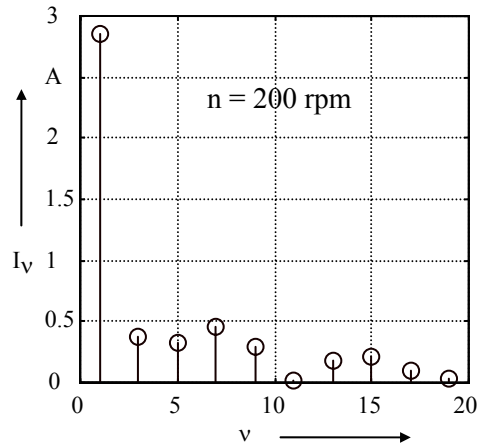

Fig.12: Phase current harmonic spectrum

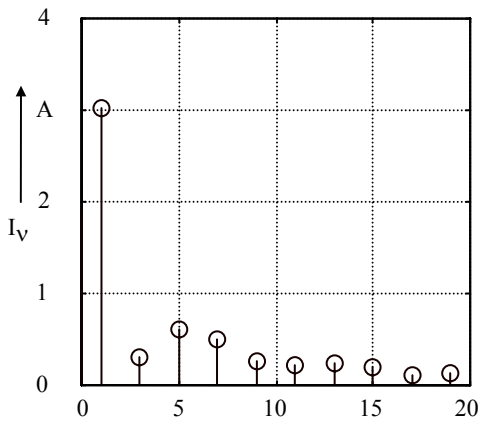

Fig.13: Phase current harmonic spectrum at n=6000rpm and V=9V

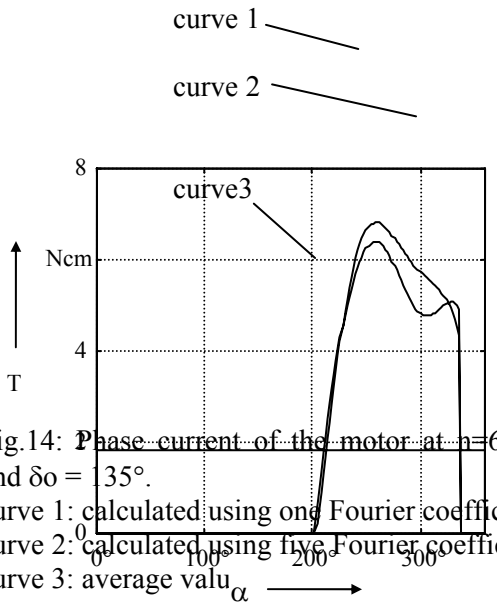

Fig.14: Phase current of the motor at n=6000 rpm and δo = 135°.
curve 1: calculated using one Fourier coefficient
curve 2: calculated using five Fourier coefficient
curve 3: average valu

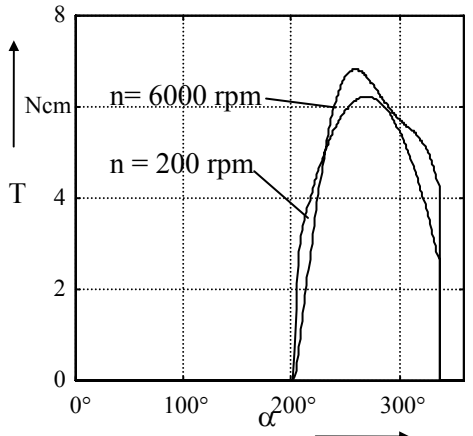

Fig.15: Instantaneous torque of the motor for δo=135° and the same average value

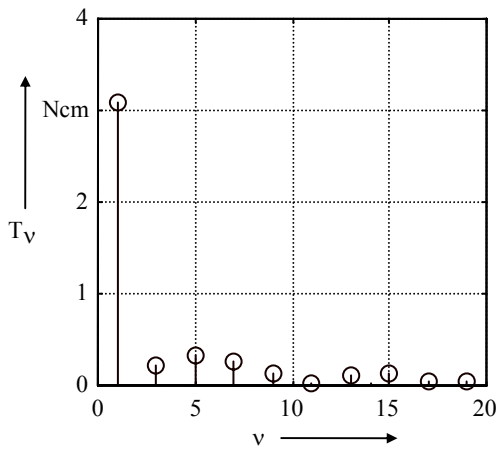

Fig.16: Torque harmonic spectrum at n=6000rpm and V=9V

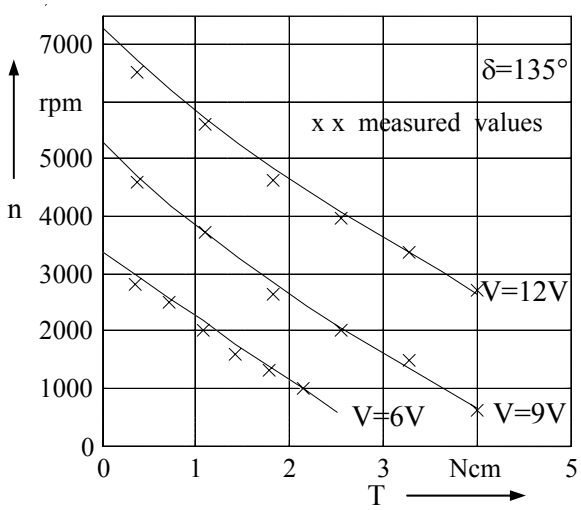

Fig.17: Speed / torque characteristics with the voltage supply as parameter at δo = 135°.

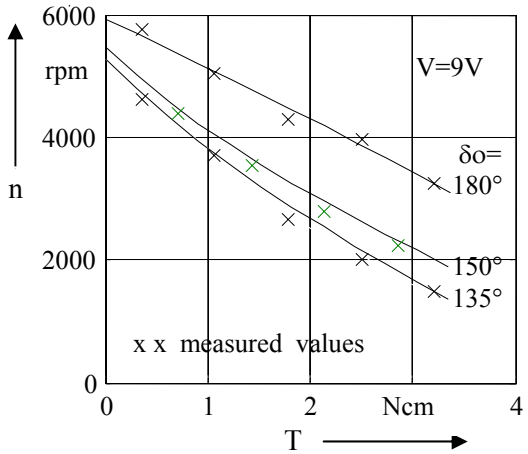

Fig.18: Speed / torque characteristics with the current flow angle δo as parameter

References:

[1] R. Hanitsch and A.-K. Daud: Contribution to the design and performance of brushless DC motors with one winding, *OPEC* 1990, pp. 273-276.

[2] Ackermann,B.;Bolte,E.;Howe,D.;Jenkins,M.K.; Zhu,Z. Q.: Frequency domain analysis of brushless DC motor performance. *ETEP*, vol. 2, No. 6, 1992,pp. 389-396

[3] A.-K.Daud; S.H. Khader : An analytical method for determination of commutation leading angle in three- phase brushless DC motor, *Proc. Of ELECTROMOTION'97*, Cluj-Napoca, pp. 253-258.

[4] R. Hanitsch: Analog computer simulation of brushless DC motors, *Proc. of ICEM* 1984, Lausanne, pp. 189-192.

[5] Coey, J.M.D.: *Rare-Earth Iron Permanent Magnets*, Oxford Science Publications, Clarendon Press Oxford, 1996.

[6] Hanitsch, R.: Design and performances of electro-magnetic machines based on NdFeB magnets, *Journal of Magnetism and Magnetic Materials 101* (1991) pp. 271-275.

[7] Rashid, M.H.: *Power Electronics, Circuits, Devices and Applications*. Pearson Prentice Hall, Upper Saddle River, New Jersy, 2004.

[8] Ertan, H.B.; Üctung, M.Y.; Colyer, R.; Consoli, A.: *Modern Electrical Drives*, Kluwer Academic Publishers, Netherlands, 2000.

[9] Wu, R.; Slemon, G. R.: A permanent magnet motor drive without a shaft sensor, *IEEE Trans. Ind. Appl.,* Vol 27, No. 2. 1991, pp. 1005-1011.

[10] Harnefors, L.; Taube, P.; Nee, H.-P.: An improved method for sensorless adaptive control of permanent-magnet synchronous motors, *Proc. Eur. Conf. Power Electronics*, Trondheim, Vol 4, 1997.

[11] Matsui, N.: Sensorless permanent-magnet brushless DC and synchronous motor drives, *ELECROMOTION*, Vol 3, No. 4, 1996, pp. 172-180.